Piranha III Tungsten Electrode Grinder w/ Dust Collection

Weld Like a Pro
An ARC-ZONE.COM Product
Selection Guide

Operations Manual

TABLE OF CONTENTS

1.	INTRODUCTION	3
2.	SPECIFICATIONS	4
3.	WARRANTY	4
4.	SAFETY	4
5.	UNPACKING AND MOUNTING	5
6.	PREPARING ELECTRODES	5
7.	WHEEL REPLACEMENT	8
8.	VACUUM SYSTEM OVERVIEW	9
9.	TROUBLESHOOTING	9
10.	EXPLODED ASSEMBLY DRAWING	10
11.	PIRANHA III PARTS LIST	11
12.	OPTIONAL COLLET KIT W/ PART LIST	12

1. INTRODUCTION

Thank you and congratulations on your purchase of the Piranha III™ Tungsten Grinder, manufactured by Diamond Ground Products in Newbury Park, CA, U.S.A. We appreciate your choice of this quality product and expect that it will provide you with many years of reliable service. It is built to last and comes with a one-year warranty against manufacturing defects.

FEATURES:

- Easy set-up, optimal consistency and near-perfect repeatability.
- Compact, durable and solid design.
- Longitudinal 20 RA grinding for maximum arc starting, arc stability, electrode life & weld
- penetration.
- Universal collet arm for 6 electrode sizes - .040” (1.0mm), 1/16” (1.6mm), 3/32” (2.4mm),1/8” (3.2mm), 5/32” (4.0mm) & 3/16” (4.8mm) - with no equipment changes.
- Angle scale included for angles from 10° - 60°
- Precision body stop gauge & depth adjustment stop ensures exact tungsten points every time - enabling consistent, repeatable arc performance and welding output.
- Containment baffle to keep dust inside the grinder housing, for safety and easy disposal.
- Tip Flat block for square end grinding and removing bad tips.
- Electrode notching station for simple cut-off.
- Single-sided diamond grinding wheel for maximum wheel life and value.
- Port Ready for Vacuum Upgrade.
- Sliding dust shield for 100% dust containment.
- Integrated receptacle area for ease of handling electrodes.
- Recessed handle for better form & function.
- On/off switch with LED light for improved display of unit operation.
- Lightened chassis for reduced weight.
- Signature blue powdercoat
- Detailed manual for valuable engineering data and welding recommendations.

BENEFITS:
SAFETY
WELD QUALITY
PRODUCTIVITY
VALUE

2. SPECIFICATIONS

Range of Included Angle:	10° - 60°
Electrode Diameters:	.040”(1.0mm), 1/16” (1.6mm), 3/32” (2.4mm), 1/8” (3.2mm), 5/32” (4.0mm) & 3/16” (4.8mm)
Minimum Electrode Length:	1.75” (44.5mm)
Voltage:	110/230 VAC, 50/60 Hz
Power Consumption:	500 Watts
Motor:	1/3 hp, 1,700 rpm, 6.0 amps
Length:	12” (304.8mm)
Width:	7.5” (190.5mm)
Height:	7.5” (190.5mm)
Weight:	32 lbs (14.5 kg) - Package weight: 38 lbs (17.2 kg)

3. WARRANTY

The Piranha III Tungsten Grinder comes with a one-year warranty on parts and labor, excluding the diamondgrinding wheel that is a consumable part that naturally wears over time. This warranty also excludes abuse to the machine, dropping of the unit or improper handling by the operator.

4. SAFETY

Before any work is done, read the caution below carefully. Working safely prevents accidents.

- When not in use, turn the grinder off for safety purposes and to decrease wear on the machine.
- Wear proper apparel. Do not wear loose clothing, including gloves, neckties, rings, bracelets, or other jewelry, which may get caught, in moving parts of the machine.
- Wear protective hair covering to contain long hair.
- Wear safety glasses and a facemask.
- Be alert and think clearly. Never operate power tools when tired, intoxicated, or when taking medication that may cause drowsiness.
- Work area should be sufficient lighting.
- A proper electrical outlet should be available for the tools. A three-prong plug should be plugged directly into a three-prong outlet. Extension cord should be the correct gauge.
- Keep visitors at a safe distance from work area.
- Always unplug grinder prior to inspection.
- Read this manual thoroughly for specific adjustments and operating procedures.
- Do not perform “make-shift” repairs. Any part that is damaged should be promptly replaced.
- Only use the grinder for its intended purpose. Do not use it for a job it was not designed for.
- Make sure that the grinder is off before plugging it in.
- Do not apply extreme force on the tungsten while grinding. This may cause your grinder to jam or cause premature grinding wheel wear.
- Never leave the grinder unattended. Turn the grinder off first and do not leave it until it comes to a complete stop.
- Keep hands away from moving parts.
- Know your grinder; learn its operation, applications, and specifi limitations.

5. UNPACKING & MOUNTING

The first thing you should do is check for shipping damage.

After unpacking the box you should have these items:

- The Piranha III Tungsten Grinder.
- Three Allen wrenches, sizes 3/32”, 7/64” & 1/8” for replacing wheels.
- PIII Manual
- Pin Vise

Mounting of the grinder is as follows. Place the unit on a flat surface allowinf enough space for the operator to work in. This also provides proper ventilation. Make sure the power switch is in the off position and plug it into the electrical outlet. Switch the power on and the unit is ready to operate.

6. PREPARING ELECTRODES

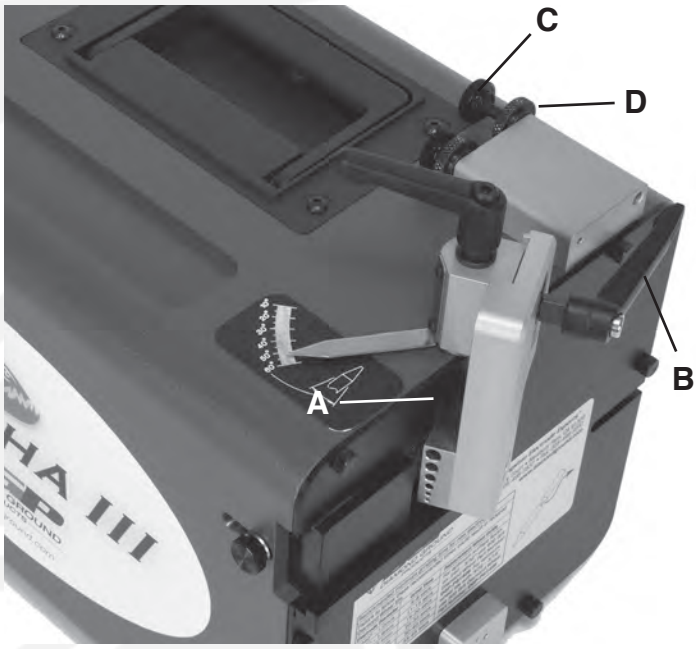

ADJUSTING HANDLES

The set up procedure for the included angle may require the use of both adjustment Handles, which are listed above as A and B. When Handle A is loosened, it allows you to rotate the Universal Collet Arm to choose the included angle that you would like to grind your tungsten. Handle B allows you to adjust the location at which the tungsten will touch the wheel.

The Body Stop Gauge depth is set with Knob C and locked in place with Nut D.

THE SET UP PROCEDURE

With the power turned off, select the included angle you would like to grind by:

1. Loosening Handle A
2. Turning the Collet Arm on its axis until the Pointer is directed at the angle on the scale you desire.
3. Re-tightening Handle A.

Next, put the tungsten at the diameter you plan to use through the proper sized collet hole on the universal collet make the height as close to the top of the wheel as possible by:

1. Loosening Handle B.
2. Slide Collet Arm up to desired position.
3. Re-tightening Handle B.

The setup in now complete. After grinding numerous tungstens, you will wear a groove on the wheel. At this point, adjust Handle B again and move the contact point down a very small amount to a fresh spot on the wheel.

Body Stop Gauge setup:

Once the desired Pin Vise electrode stick-out is determined, set the Body Stop Gauge as follows:

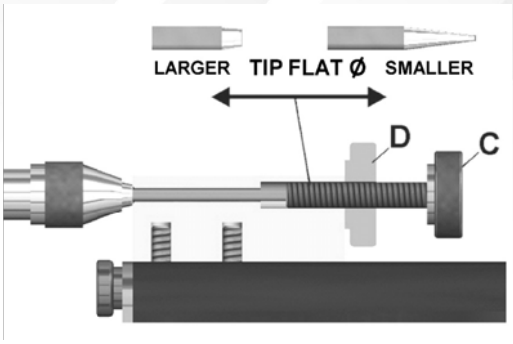

Initial Gauge setup:

1. With electrode extending to the desired length, tighten Pin Vise lock collar.
2. Loosen Nut D on the Body Stop Gauge.
3. Insert electrode into Body Stop Gauge.
4. Rotate Knob C until the Stop makes contact with electrode tip. Lock the Stop in place with Nut D.

To duplicate electrode Tip Flat diameter (with Body Stop Gauge depth set per above):

1. Insert electrode into Pin Vise. Extension should be beyond the desired final length.
2. Adjust Pin Vise collar so there is a slight drag on the extended electrode.
3. Insert electrode into Body Stop Gauge. Slide until nose of the Pin Vise contacts the Gauge face.
4. Secure electrode in position by tightening Pin Vise collar.

NOTE: Diamond Ground Products (DGP) Diamond Grinding wheels are specifically designed for optimum wheel life for grinding tungsten electrodes.

GRINDING TECHNIQUES

After the short set up procedure is finished you are ready to prepare your electrode quickly and easily. Turn the power switch on; slide the tungsten into the proper guide hole on the electrode arm. From top to bottom the holes are: 3/16" (4.8mm), 5/32" (4.0mm), 1/8" (3.2mm), 3/32" (2.4mm), 1/16" (1.6mm), .040" (1.0mm). Lightly touch the wheel patient and do not gouge the wheel by trying to grind the electrode too quickly. Gouging the wheel will wear a groove much faster and cause excessive wear. The approximate recommended grinding times for each of the diameters is

3/16" (4.8mm)	55 - 65 sec	3/32" (2.4mm)	15-20 sec
5/32" (4.0mm)	30-40 sec	1/16" (1.6mm)	11-15 sec
1/8" (3.2mm)	25-35 sec	.040" (1.0mm)	6-8 sec

REMOVING A TIP FROM AN ELECTRODE

After welding, it is beneficial to remove a bad tip before regrinding. To do this, turn on the power and insert the tungsten in the proper sized hole from the choices you see on the Tip/Flat Block. Slowly push the tip against the wheel until the point is removed. Once again, be patient and do not gouge the wheel. A burr can form if too much pressure is exerted on the tungsten.

NOTCHING YOUR ELECTRODE

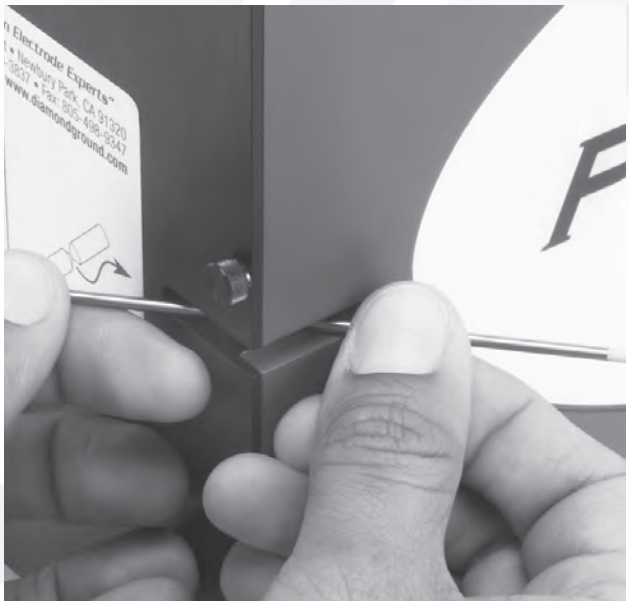

The notching feature is located at the right hand side of your unit. This feature is provided to notch your electrodes to a point where they can be split in half or to remove any existing contamination off of a spent electrode. You should never snap your electrode in half without notching it first. Snapping your electrode will cause splintering within your electrode, which will later result in contamination in your weld.

- Insert your electrode through the slot opening and push through so the electrode is exiting from opposite end. Holding both ends, push the electrode towards the corner of the rotating wheel.
- Once you have notched a suffcient amount of your electrode on one side, rotate the electrode to notch the remaining side.
- Once complete, use the Tip/Flat Block to flatten your and proceed to grind as normal.

ADJUSTING THE SLIDING DUST SHIELD

Turn the dust shield knob counter-clockwise to unlock. Depending on the angle desired, slide the shield forward or backward and align the edge of the shield to the inner face of the electrode arm. Dust escapes not from the holes, but the space between the wheel and the electrode arm. Turn the dust shield knob clockwise to lock the shield in place. Remember to adjust the shield if adjusting the angle.

7. WHEEL REPLACEMENT

HOW TO INSTALL REPLACEMENT WHEELS

Please use the following steps to remove and replace the Diamond Grinding wheels:

1. Turn the power off, unplug the electrical outlet, and wait until the motor has come to a complete stop.
2. Completely unscrew and remove Handle A (see picture at adjusting handles). Lift up and remove the Arm, taking care not to lose the washer between the Arm and the Handle. Set them aside.
3. Unscrew the six thumbscrews on the wheel cover. Remove the Wheel Cover to fully expose the Wheel.
4. Using the supplied Allen Wrench, loosen the four screws on the front of the Grinding Disk.
5. Remove the old Wheel and mount the replacement wheel on the arbor.
6. Replace all of the other parts in reverse order the exact same methods you used to remove them.

**** IMPORTANT *****
DO NOT REMOVE OR OVER TIGHTEN ARBOR WHEN CHANGING WHEEL, ONLY REMOVE 4 SCREWS

For optimum surface finish on .040” through 3/32”, use a 600 Grit Diamond Wheel (DGP-PG1426)
For optimum wheel lifeon 3/32” through 3/16”, use a 300 Grit Diamond Wheel (DGP-PG1425)

PART NO. PIRANHA GRINDER ACCESSORIES

DGP-PG1425 Piranha III Grinding Wheel – 300 Grit Single Sided (6” diameter)
DGP-PG1423 Piranha III Grinding Wheel – 150 Grit Single Sided (6” diameter)
DGP-PG1426 Piranha III Grinding Wheel – 600 Grit Single Sided (6” diameter)

8. VACUUM SYSTEM OVERVIEW

The Piranha III-V2 comes with a tool cabinet and integrated vacuum system for the collection of tungsten dust.
This feature has become very popular due to the disclosures in the past few years about the danger of inhal-ing dust from the commonly use 2% Thoriated tungsten. This danger is because 2% Thoriated tungsten is radioactive and is a known cancer-causing element. Please contact your local OSHA office if you would like more information about this issue. In addition, we offer free samples of non-radioactive alternative tungsten, which performs better in most applications. Users of the Piranha Series can later upgrade their systems to add the vacuum system if later chosen.

It is impossible to contain all of the lightweight dust particles that deflect quickly off the wheel from grinding. The vacuum system offers a way collecting the majority of the dust that is produced while grinding and cutting tungsten electrodes. Replacement vacuum filters are in stock at the factory for immediate shipment. Installation instructions come with replacement filters and it is a very quick process.

9. TROUBLESHOOTING

SYMPTOMS	POSSIBLE CAUSE(S)	CORRECTIVE ACTION
Grinder won't start	1. Blown line or tripped circuit breaker	1. If fuse is blown, replace with fuse of proper size. If breaker is tripped, reset it.
	2. Low line voltage	2. If voltage is less than rated, check size of wiring from main switch on property. If OK, contact power company.
	3. Material wedged between wheel and guard	3. Remove material wedged between wheel and guard.
Excessive vibration	1. Improper mounting of grinder or accessories	1. Remount
	2. Improper wheel mounting	2. Remove both wheels then remount wheels, but rotate one wheel 1/4 turn with respect to its previous position. The other wheel would retain its original position.
Grooved wheel	1. Electrode pushed with excessive force	1. Use recommended grinding times table.
	2. On steep angled tungsten, collet touching wheel	2. Use short collets.
Motor is overheating	1. Motor not turning freely (without power)	1. Clean around wheels & shaft. Then replace bearings.

10. PIRANHA III
Tungsten Grinder
Exploded Assembly

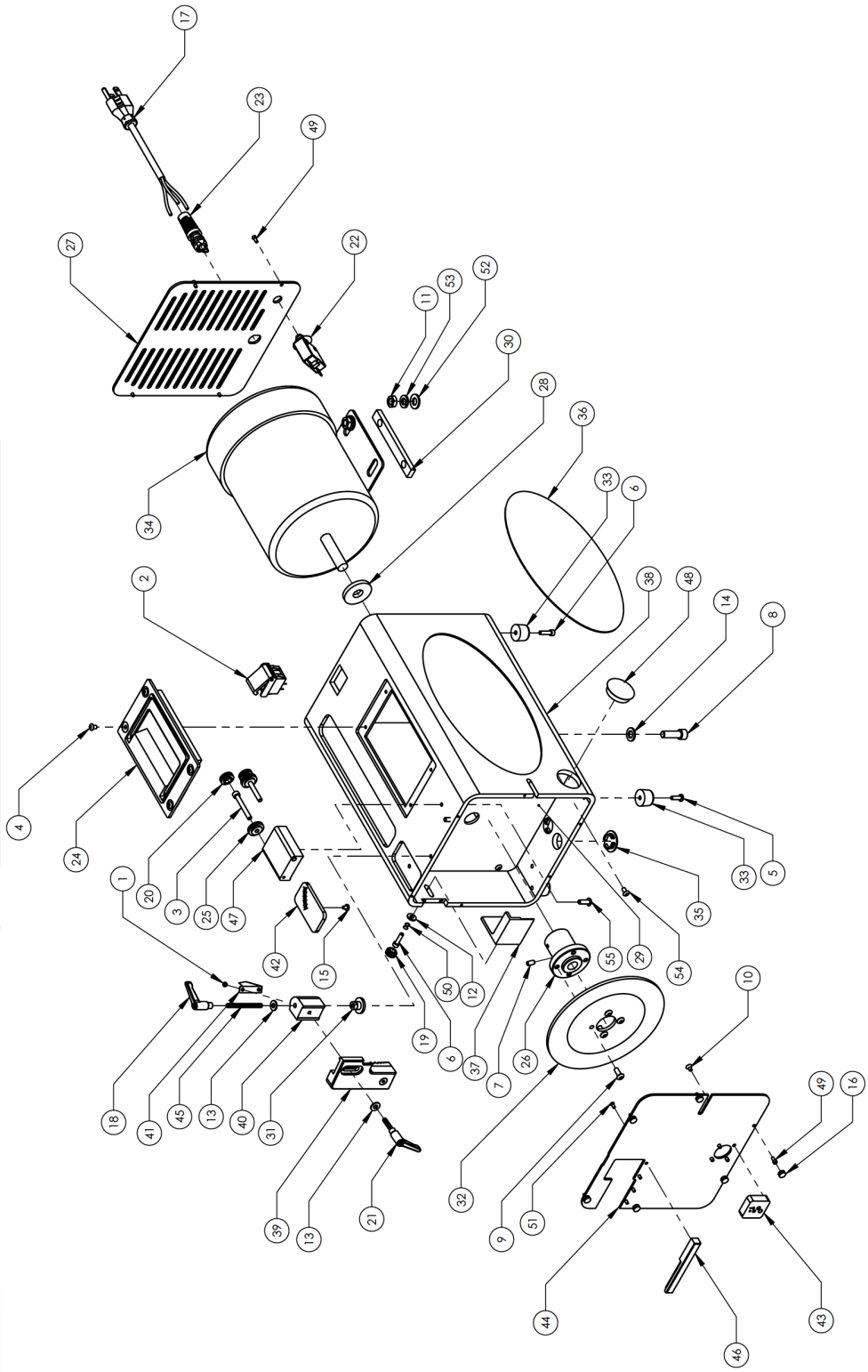

11. PIRANHA III Tungsten Grinder Parts List

ITEM NO.	PART NUMBER	DESCRIPTION	QTY.
1	DGP-PG1430	BHSCS #4-40 x 3/16”	2
2	DGP-PG1427-A	SWITCH-ROCKER A/C W/COVER	1
3	DGP-PG1362	SHCS BLK #10-32 x 1-1/2 FT	2
4	DGP-P542	BHSCS SS #8-32 x 1/2	4
5	DGP-P570	SHCS BLK #8-32 x 1/2	3
6	DGP-PG1337	SHCS BLK #8-32 x 3/4	2
7	DGP-PG1439	SHSS BLK #1/4-20 x 3/8 CUP PT	2
8	DGP-PG1444	SHCS BLK #1/4-20 x 1 3/8	4
9	DGP-PG1442	BHSCS BLK #10-32x1/2	4
10	DGP-PG1349	BHSCS BLK #6-32 X 1/4	4
11	DGP-PG1437	NUT HEX ZINC #1/4-20	4
12	DGP-P723	WASHER FLAT SS #10	1
13	DGP-P730	WASHER FLAT SS #10	2
14	DGP-P700	WASHER 1/4 ID 1/2 OD	4
15	DGP-PG1494-A	BHSCS #6-32 x 3/16	1
16	DGP-P1317	KNOB - SHEAR LOK #4 - BLACK	6
17	DGP-P355	POWER CORD WITH GROMMET	1
18	DGP-P410	HANDLE - ADJUSTABLE	1
19	DGP-P450	8-32-KNOB	1
20	DGP-P460	KNOB - SHEAR-LOK #10 - BLACK	2
21	DGP-PG1000	HANDLE - ADJUSTABLE WITH STUD	1
22	DGP-PG1026	CIRCUIT BREAKER	1
23	DGP-PG1027	STRAIN RELIEF	1
24	DGP-PG1310-A	HANDLE, FOLDING	1
25	DGP-PG1365	KNOB - KNURLED - #10-32	2
26	DGP-PG1406	ARBOR DISC P-III	1
27	DGP-PG1410-A	COVER HOUSING REAR P-III	1
28	DGP-PG1413	FELT WASHER	1
29	DGP-PG1424-A	BODY-PARTITION	1
30	DGP-PG1420-A	SPACER, MOTOR MOUNT	2
31	DGP-PG1416	PIVOT - ARM P-III	1
32*	(See table below)	GRINDING WHEEL DISK SINGLE SIDED, 6” OD	1
33	DGP-PG1433	BUMPER - RECESSED 3/4” DIA x 9/16”	4
34*	(See table below)	PIRANHA III MOTOR	1
35	DGP-PG1438	PLUG - FINISHING 3/4 HOLE NYLON BLK	2
36	DGP-PG1452-A	LABEL - P-III MAIN	2
37	DGP-PG1457-A	DUST SHIELD	1
38	DGP-PG1471-A	HOUSING - P-III	1
39	DGP-PG1473-A	ARM ELECTRODE	1
40	DGP-PG1474	BLOCK - ARM PIVOT	1
41	DGP-PG1475	POINTER ANGLE	1
42	DGP-PG1476-A	ANGLE PLATE - PIII	1
43	DGP-P1477	BLOCK - FLATTING	1
44	DGP-PG1478-A	COVER HOUSING FRONT P-III	1
45	DGP-PG1480	STUD SS #10-32 x 2	1
46	DGP-PG1485-A	DUST SHIELD EXTENSION	1
47	DGP-PG1486	BODY - STOP GAUGE	1
48	DGP-PG1489	PLUG -1 NPT	1
49	DGP-PG1318	SHCS BLK #4-40 x 5/16	10
50	DGP-PG1615-A	RETENTION SPRING	1
51	DGP-PG1404	BHCS 4-40 x 1/4"BLACK OXIDE	4
52	DGP-PG1334	WASHER FLAT SS 1/4" x 5/8" OD .281" ID; .050"	4
53	DGP-P720	WASHER SPLITLOCK 1/4"	4
54	DGP-PG1335	BHSCS BLK #8-32 X 3/8"	4
55	DGP-PG1319	BHSCS BLK #6-32 X 1/2	2

*

ITEM NO.	PART NUMBER	DESCRIPTION
32	DGP-PG1425	GRINDING WHEEL DISK SINGLE SIDED, 6” OD – 300 GRIT (STANDARD)
	DGP-PG1423	GRINDING WHEEL DISK SINGLE SIDED, 6” OD – 150 GRIT
	DGP-PG1426	GRINDING WHEEL DISK SINGLE SIDED, 6” OD – 600 GRIT
34	DGP-PG1436	PIRANHA III MOTOR – 110 VOLT / 60 HERTZ
	DGP-PG1650	PIRANHA III MOTOR – 110 VOLT / 50 HERTZ
	DGP-PG1466	PIRANHA III MOTOR – 220 VOLT / 60 HERTZ
	DGP-PG1600	PIRANHA III MOTOR – 230 VOLT / 50 HERTZ

12. OPTIONAL SHORT COLLET KIT

DGP-KIT-PIII-AS

Piranha III Collet Upgrade Kit

Get the performance of the new Piranha III tungsten grinders without having to buy a new grinder! Our new Piranha III collet upgrade kit can be used on your older model Piranha III tungsten grinder to enable you to grind tungsten as short as .750” (19.05mm).The process and directions are simple.

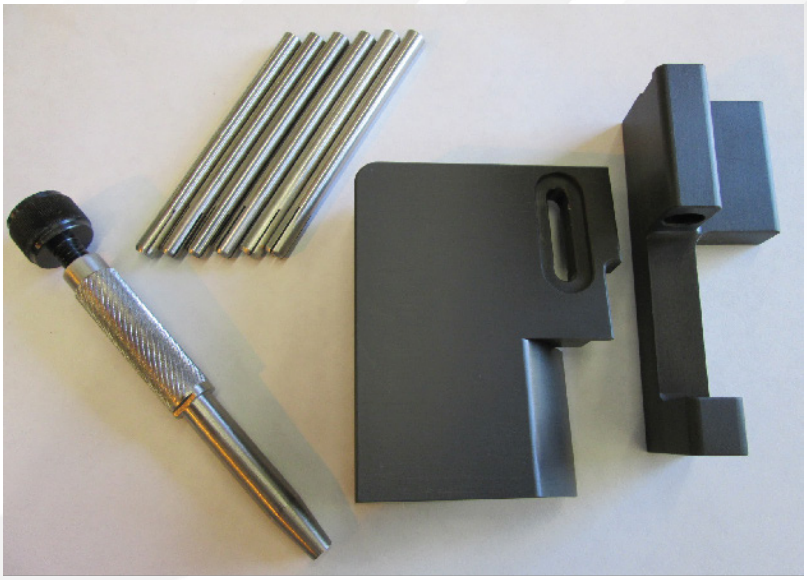

DGP-KIT-PIII-AS PARTS LIST	
DGP-P460	KNOB FOR #10 SCREW HEAD, BLACK PLASTIC
DGP-PG1362	SHCS BLK #10-32 X 1-1/2", FULL THREAD
DGP-PG1365	KNOB - KNURLED BLACK, #10-32 3/4" x 7/32"
DGP-PG1418	THUMB SCREW, BLK ALLOY #5/16-18 X 1”
DGP-PG1495-A	GUIDE BLOCK, COLLET BODY
DGP-PG1496-A	COLLET BODY WAND
DGP-PG1497	3/16” COLLET
DGP-PG1498	5/32” COLLET
DGP-PG1499	1/8” COLLET
DGP-PG1500	3/32” COLLET
DGP-PG1501	1/16” COLLET
DGP-PG1502	.040” COLLET
DGP-PG1503-A	ADJUSTABLE STOP BLOCK