NEXEL INDUSTRIES INC.

1-800-645-2986
www.nexelwire.com

18" DEEP / 24" DEEP ANGLE SHELVES

ASSEMBLY INSTRUCTION

CONTENTS

REF.	QTY.	DESCRIPTION
1	2	63" POST
2	2	54" POST
3	1	DUNNAGE SHELF
4	4	ANGLE SHELF
H1	4	
H2	4	
H3	20 SETS	

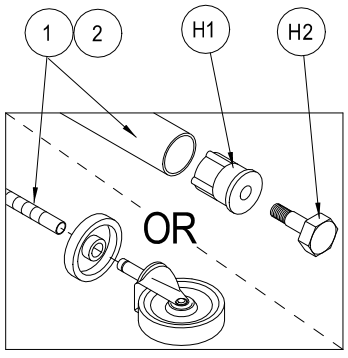

1

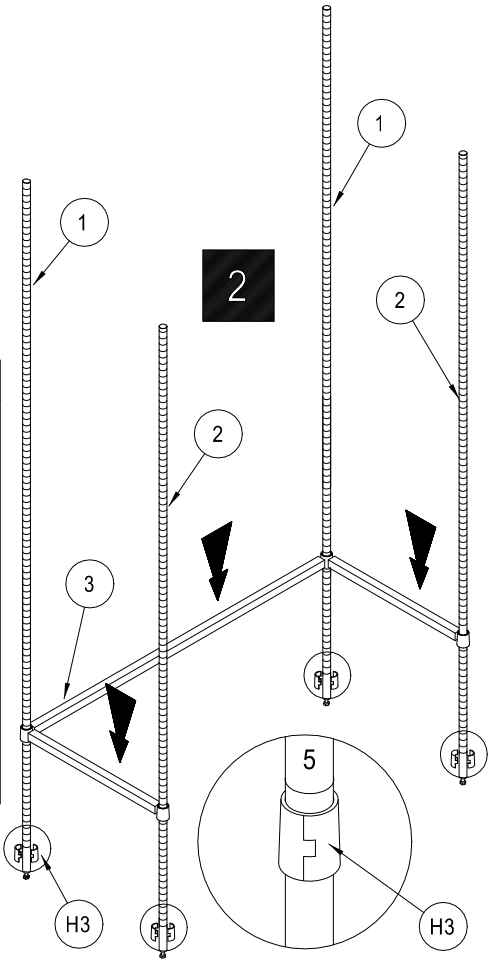

2

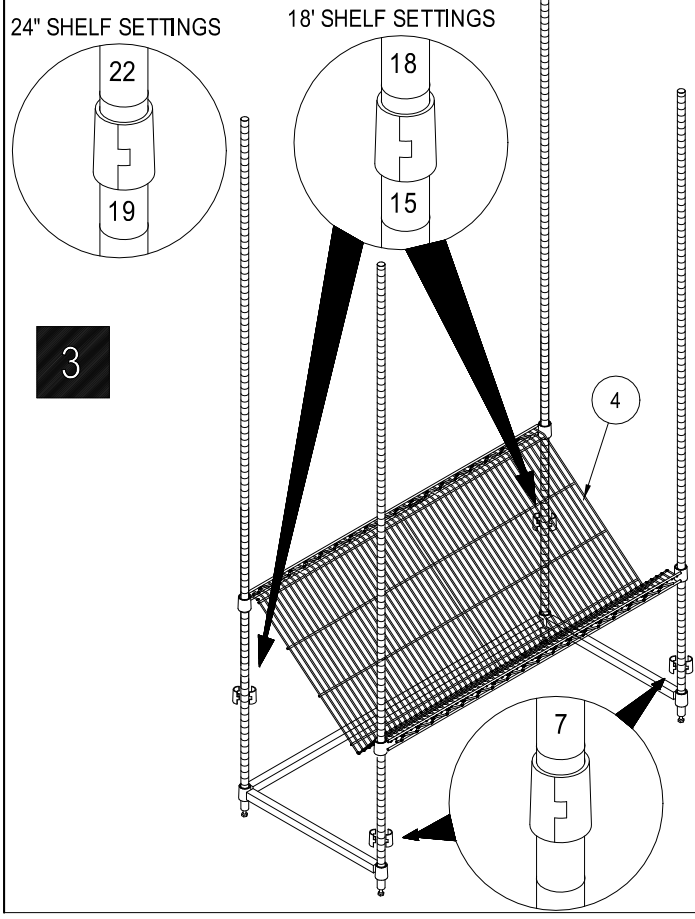

3

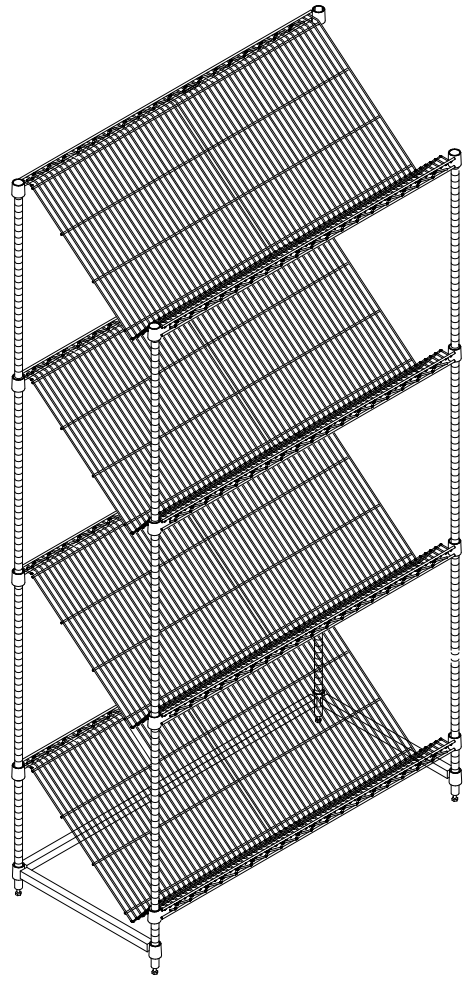

4

Ordering contact

FS Workspace
Business • Education • Facility Supplies
FilingSupplies.com
FilingSupplies.com | 800-810-3453

OPTIONAL SHELF DIVIDER

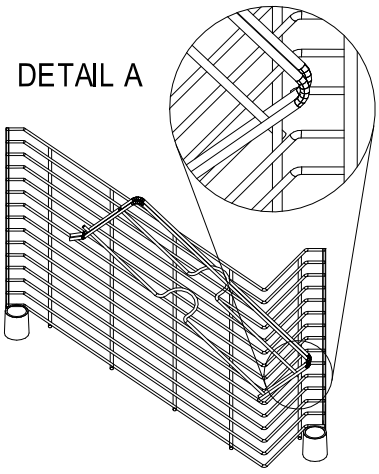

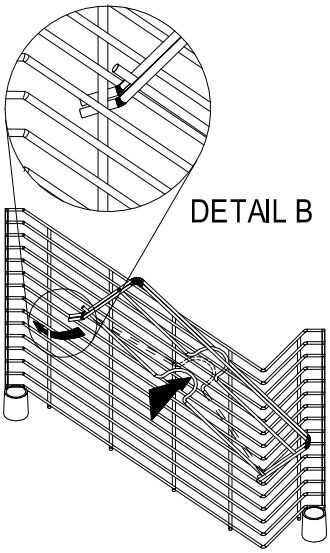

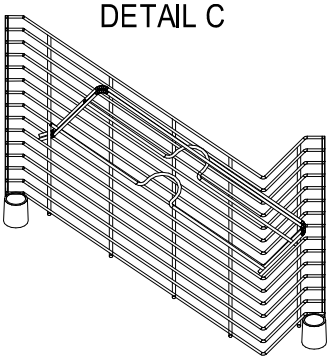

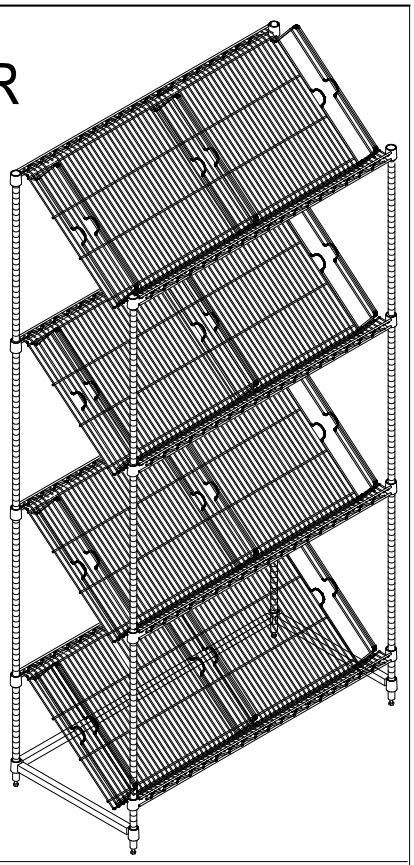

OPTIONAL DOLY BASE

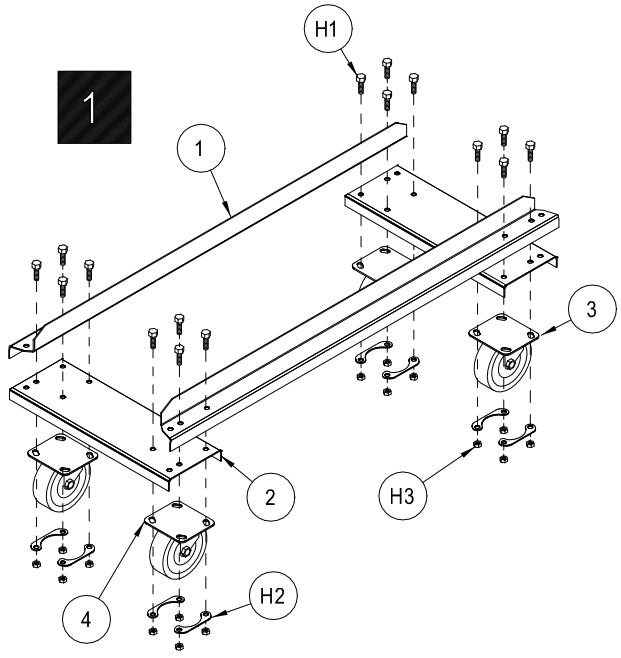

CONTENTS

REF.	QTY.	DESCRIPTION
1	2	Z- SUPPORT
2	2	CASTER CHANNEL
3	2	SWIVEL CASTER
4	2	RIGID CASTER
5	4	CORNER BUMPER
H1	16	
H2	8	
H3	16	
H4	4	
H5	4	

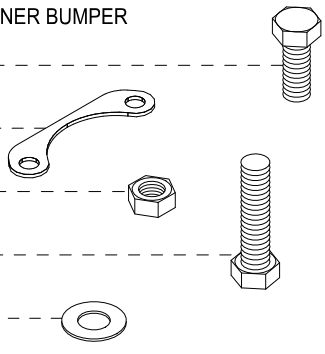

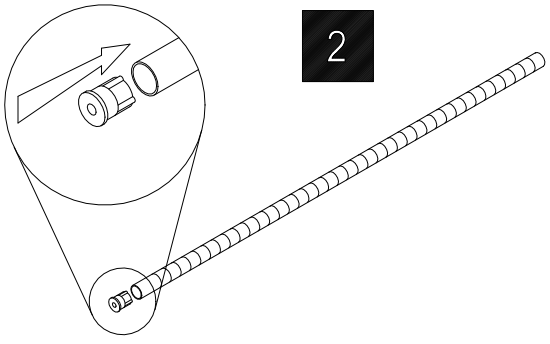

4 SHELF

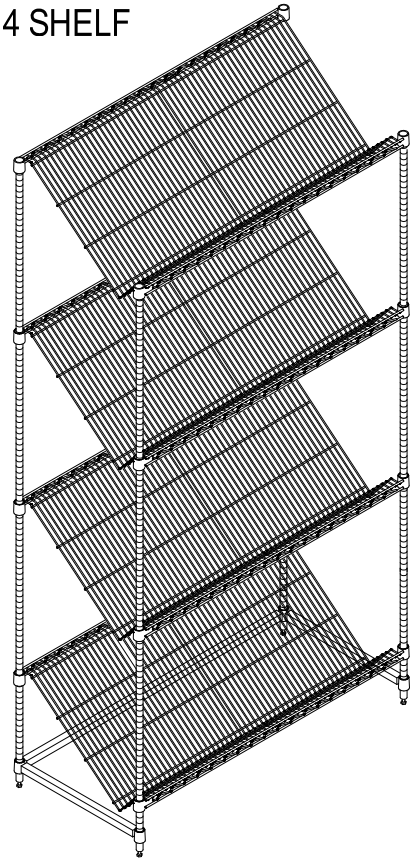

5 SHELF

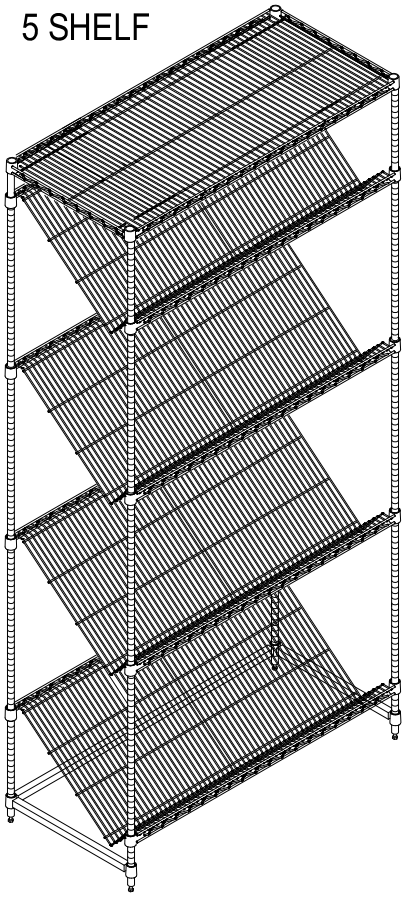

4 HELF TRUCK

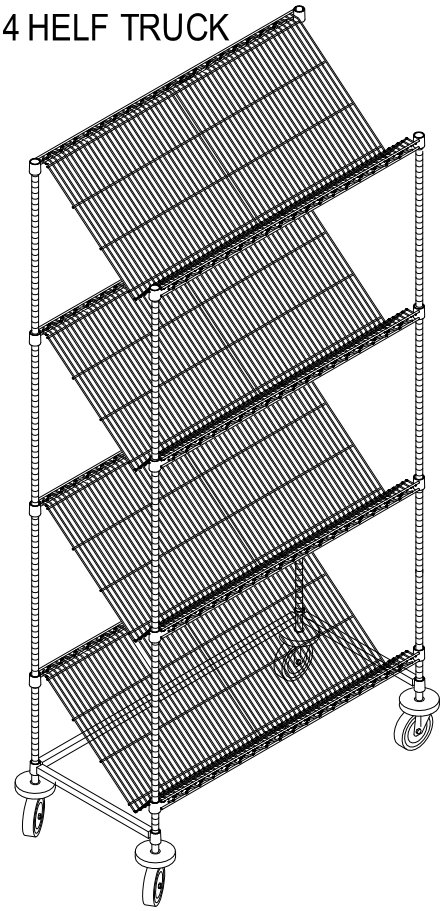

4 SHELF WITH DOLLY BASE

