FS Workspace
Business • Education • Facility Supplies
FilingSupplies.com

Office Partitions With Electric

ASSEMBLY

- Configurations require the corresponding steps needed for proper assembly.
- Attach appropriate brackets or legs on the ends of the panels as needed.
- Do not attach bolts or brackets into the outermost edge of a panel that will be last in line.
- Starter panel should use a corner, 3-way, 4-way, or wall bracket.
- Insert bolt cap into unused threaded insert to finish your project.
- Level each panel as you go along.

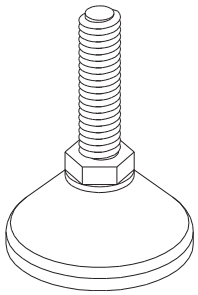

Adjust all levelers to approximately 1-1/4”

WARNING

In order to prevent structural failure, instability, tip-over, and/or serious injury, please follow instructions carefully.

- Use only the instructions, parts and hardware included
- Maximum span for connected panels without support is 12 feet



- Do not move panels while they are connected together
- Maximum span for connected panels using overhead cabinets or shelves without support is 12 feet
- Consult licensed electrician for proper installation

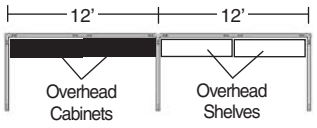

HARDWARE

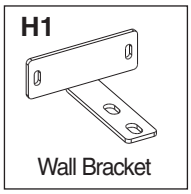

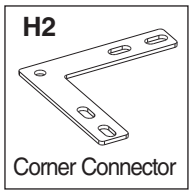

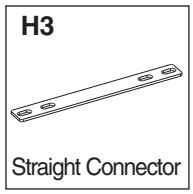

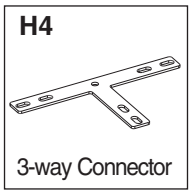

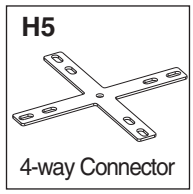

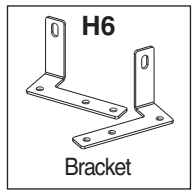

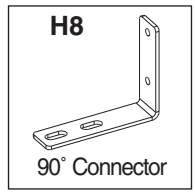

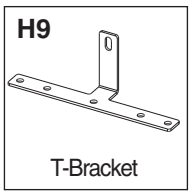

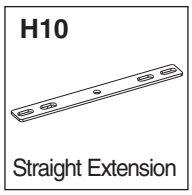

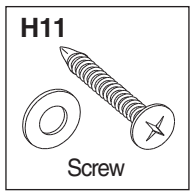

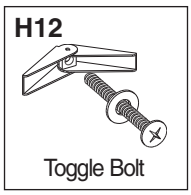

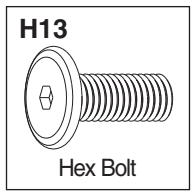

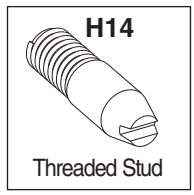

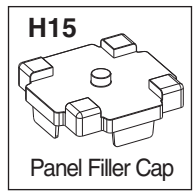

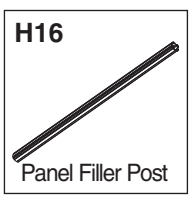

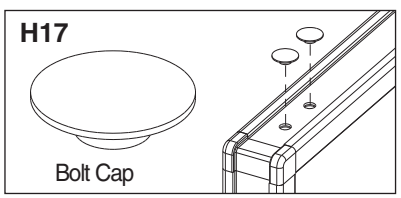

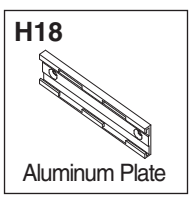

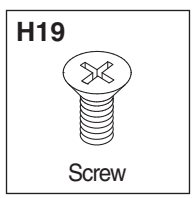

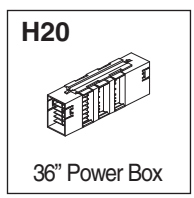

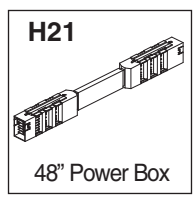

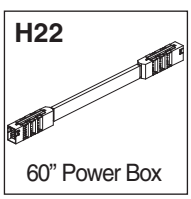

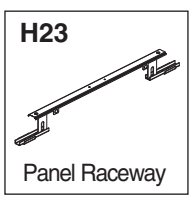

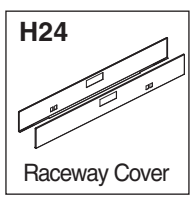

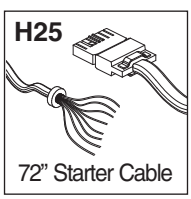

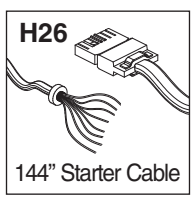

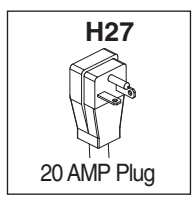

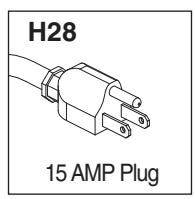

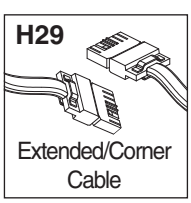

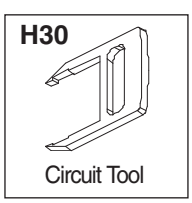

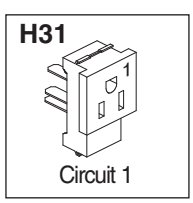

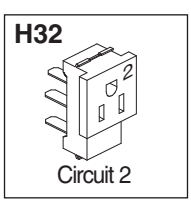

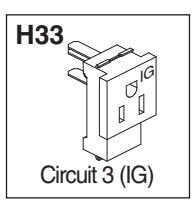

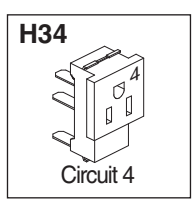

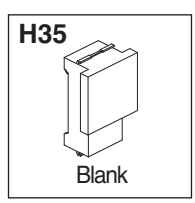

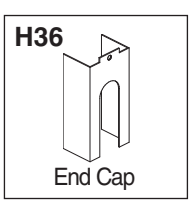

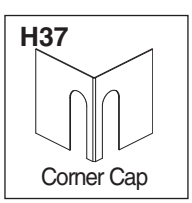

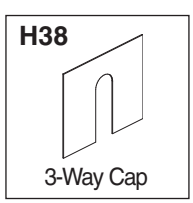

OFFICE PARTITIONS

Go To "A"

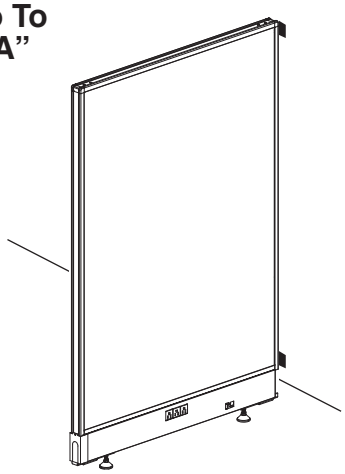

Go To "B"

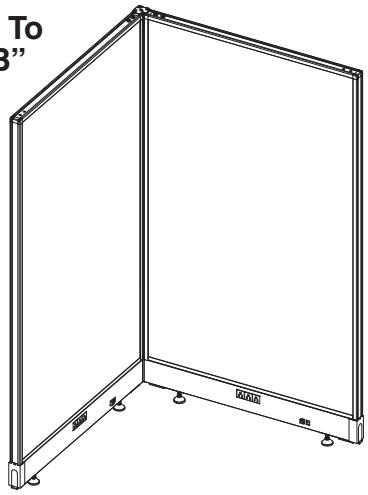

Go To "C"

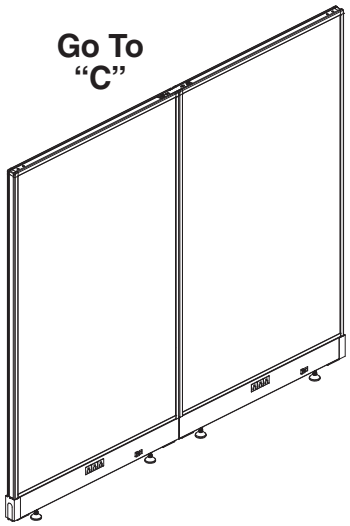

Go To "D"

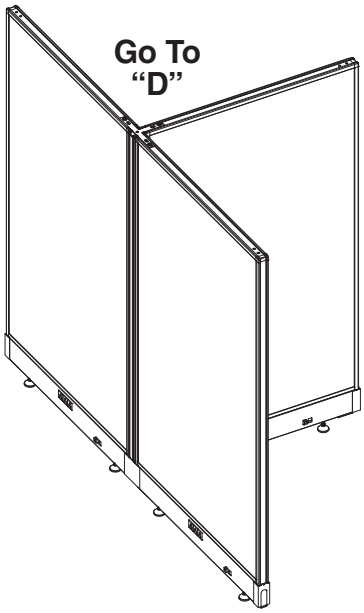

Go To "E"

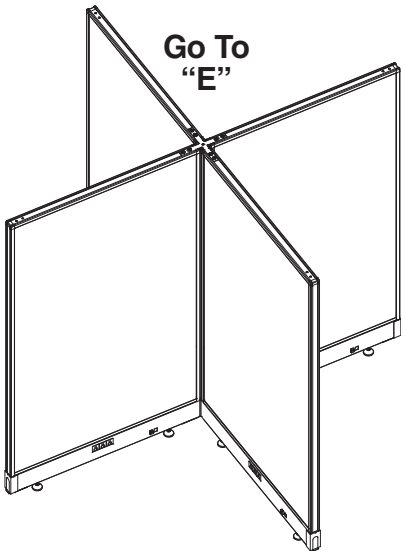

Go To "F"

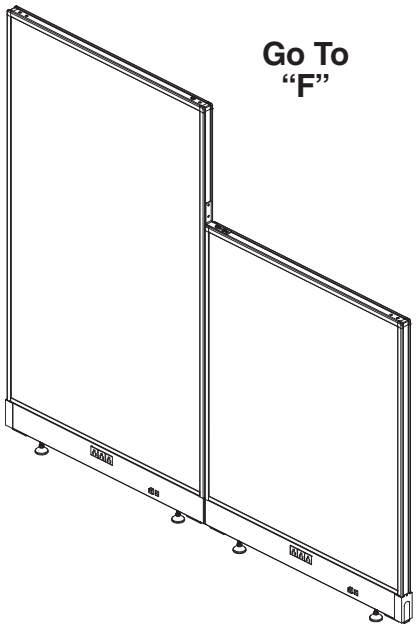

Go To "G"

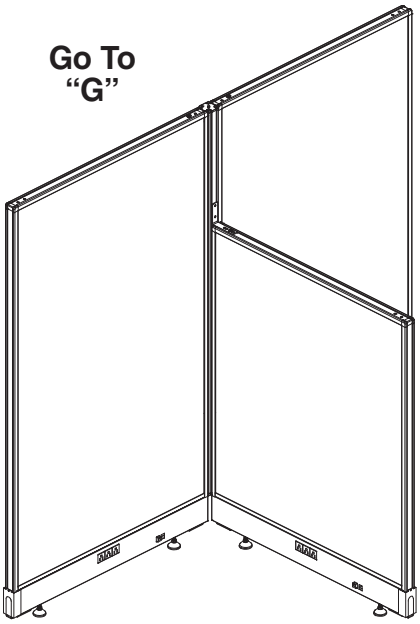

Go To "H"

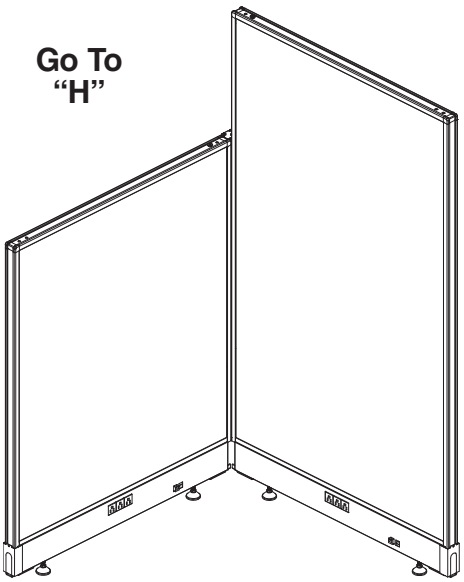

Go To "I"

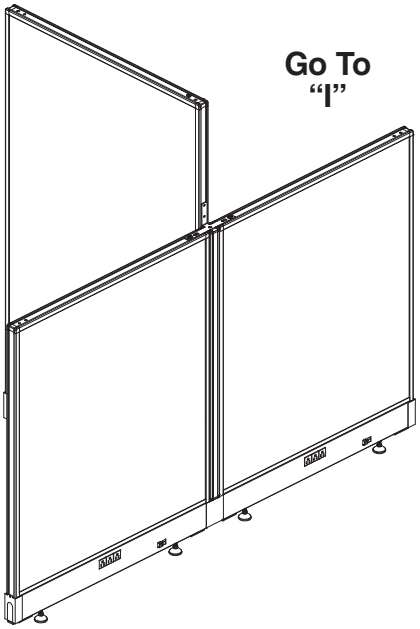

OFFICE PARTITIONS

A

STEP 1
Remove feet from panel. Attach connectors to top and bottom.

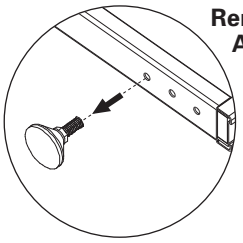

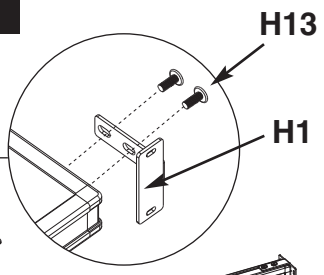

STEP 2
Attach raceway to bottom of panel. Add feet and bottom bracket.

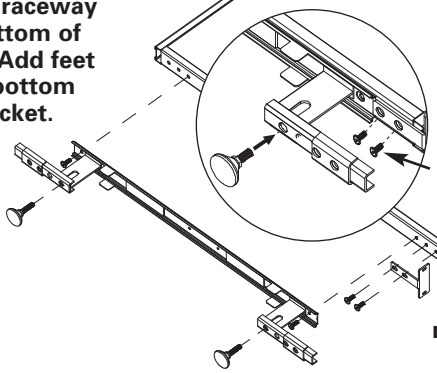

Foam seal may need to be trimmed to fit panel.

STEP 3
Attach aluminum plate(s) to bottom of raceway.

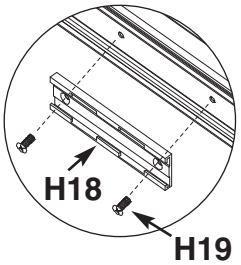

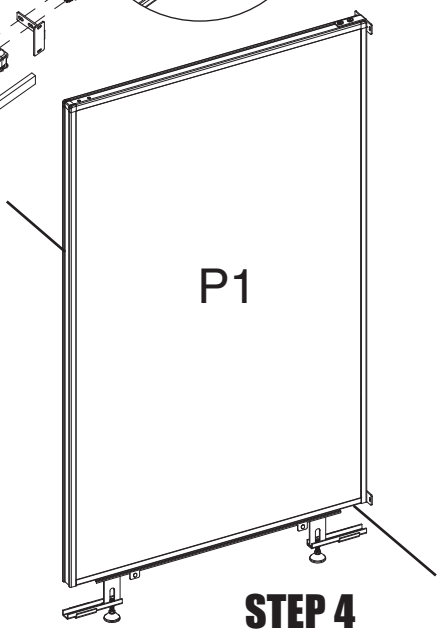

STEP 4
Attach to wall

H1	H13	H18	H19
(2)	(6)	(1/2)*	(2/4)*

Note: Hardware to anchor wall bracket to wall is not provided.

B

STEP 1
Remove feet from panel. Attach connectors to top and bottom.

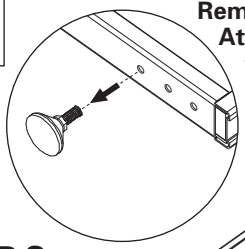

STEP 5
Loosely attach top bolts.

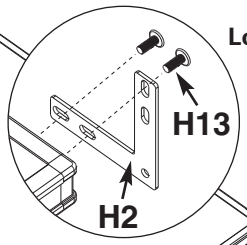

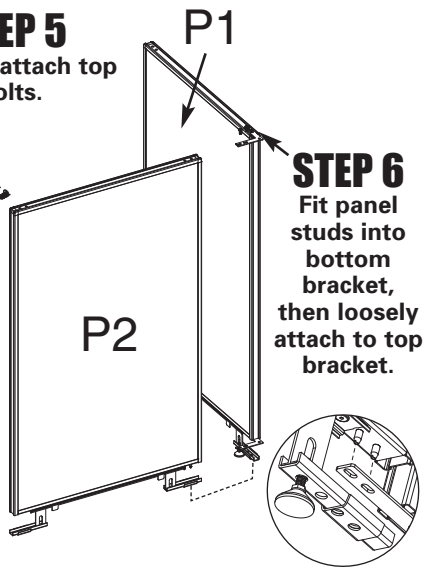

STEP 6
Fit panel studs into bottom bracket, then loosely attach to top bracket.

STEP 2
Attach raceway to bottom of panels. Add feet and bottom bracket.

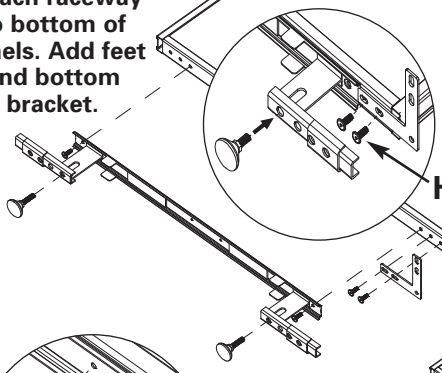

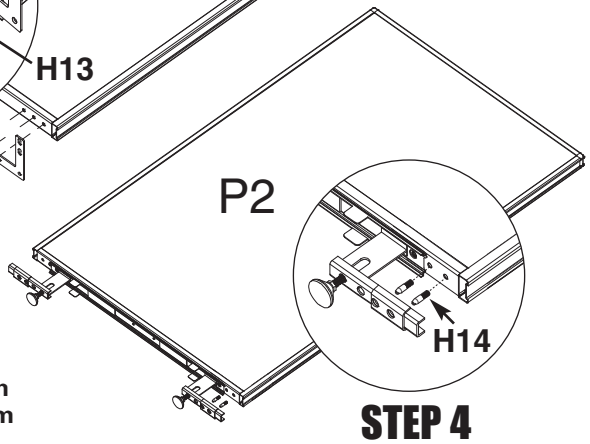

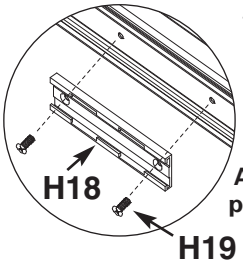

STEP 3
Attach aluminum plate(s) to bottom of raceway.

STEP 4
Insert panel studs.

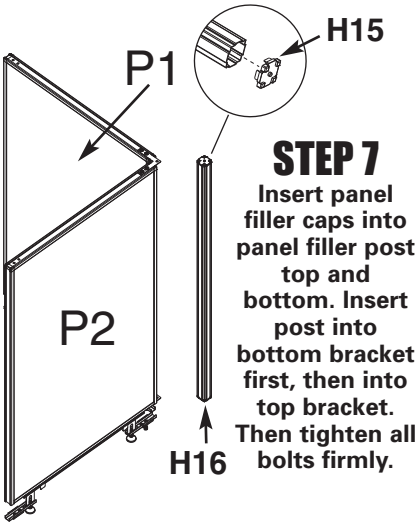

STEP 7
Insert panel filler caps into panel filler post top and bottom. Insert post into bottom bracket first, then into top bracket. Then tighten all bolts firmly.

H2	H13	H14	H15	H16	H18	H19
(2)	(10)	(2)	(2)	(1)	(2/4)*	(4/8)*

*1 plate, 2 screws per 36" panel. 2 plates, 4 screws per 48" or 60" panel.

OFFICE PARTITIONS

C

STEP 1
Remove feet from panel. Attach connectors to top and bottom.

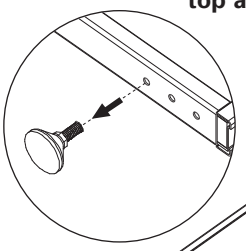

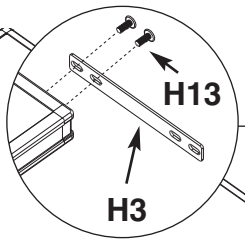

STEP 4
Loosely attach top bolts

STEP 5
Insert panel studs

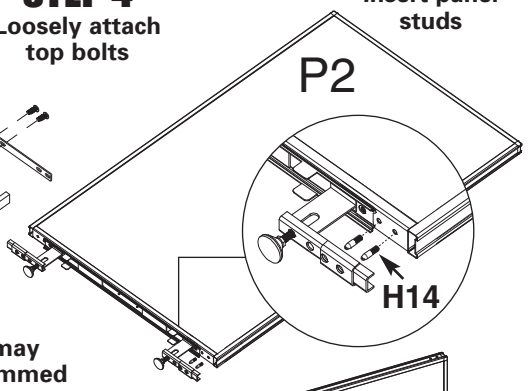

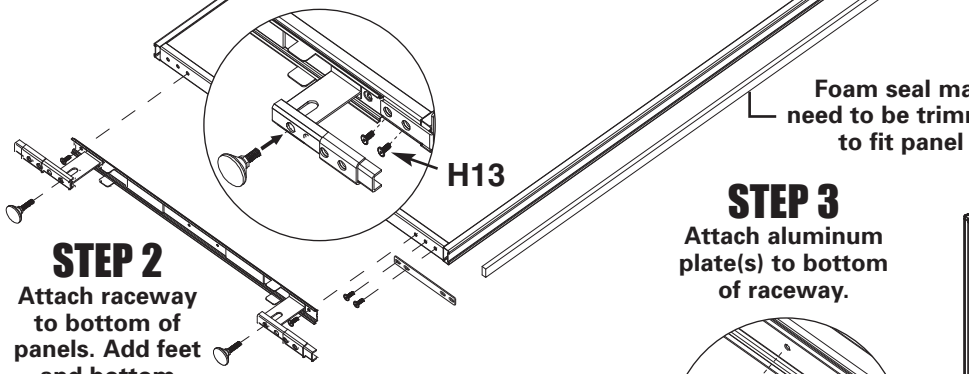

STEP 2
Attach raceway to bottom of panels. Add feet and bottom bracket.

STEP 3
Attach aluminum plate(s) to bottom of raceway.

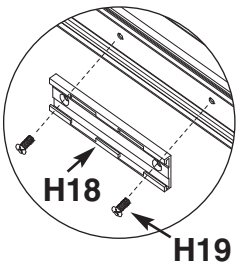

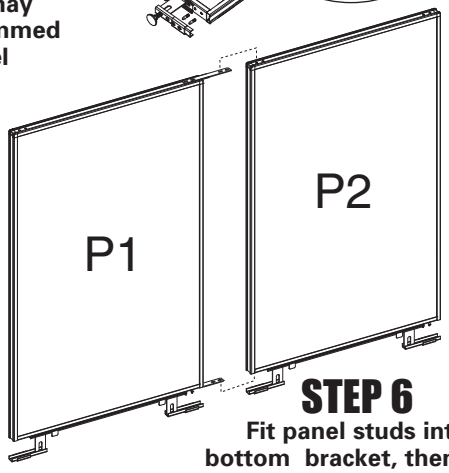

STEP 6
Fit panel studs into bottom bracket, then bolt and tighten top bracket

H3	H13	H14	H18	H19
(2)	(10)	(2)	(2/4)*	(4/8)*

D

STEP 1
Remove feet from panel. Attach connectors to top and bottom.

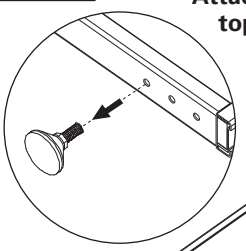

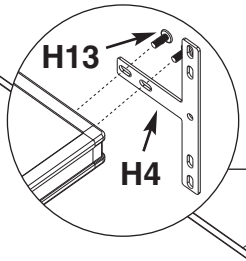

STEP 4
Loosely attach top bolts

STEP 5
Insert panel studs

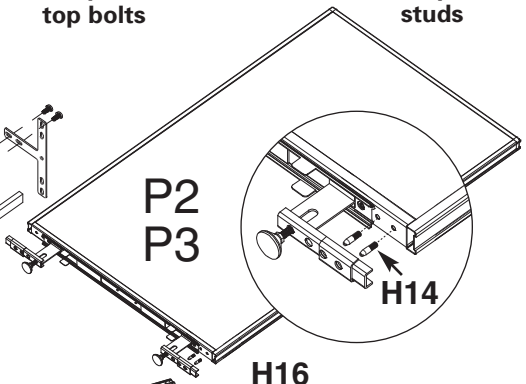

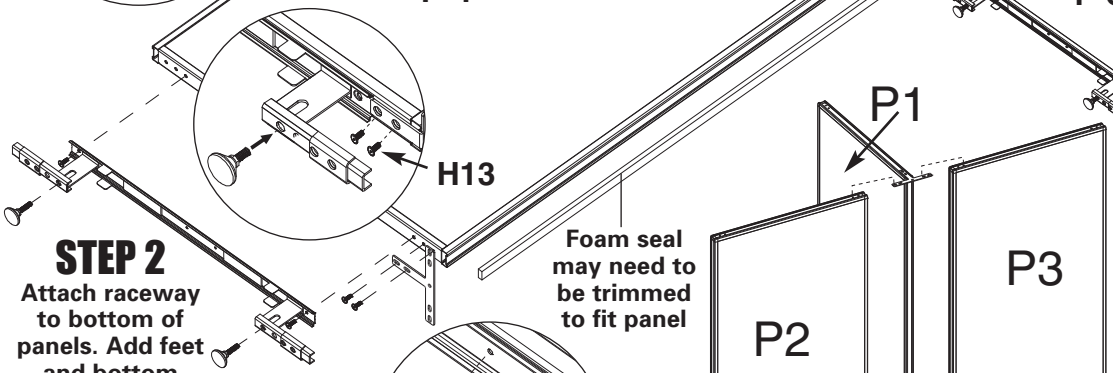

STEP 2
Attach raceway to bottom of panels. Add feet and bottom bracket.

STEP 3
Attach aluminum plate(s) to bottom of raceway.

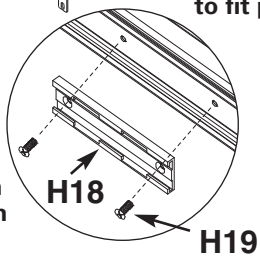

STEP 6
Fit panel studs into bottom bracket, then loosely attach to top bracket

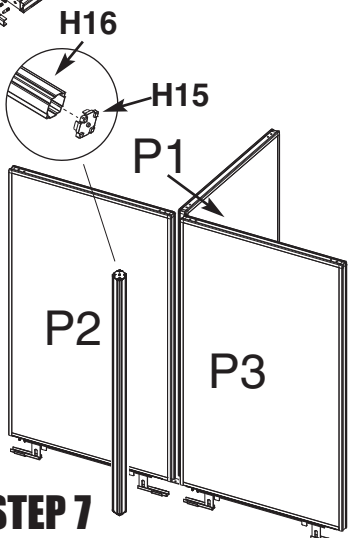

STEP 7
Insert panel filler caps into panel filler post top and bottom. Insert post into bottom bracket first, then into top bracket. Then tighten all bolts firmly

H4	H13	H14	H15	H16	H18	H19
(2)	(14)	(4)	(2)	(1)	(3/6)*	(6/12)*

*1 plate, 2 screws per 36" panel. 2 plates, 4 screws per 48" or 60" panel.

OFFICE PARTITIONS

E

STEP 1
Remove feet from panel. Attach connectors to top and bottom.

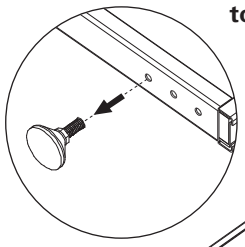

STEP 4
Loosely attach top bolts

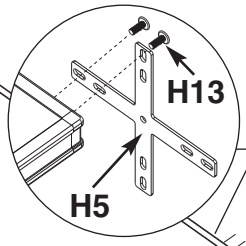

Foam seal may need to be trimmed to fit panel

STEP 2
Attach raceway to bottom of panels. Add feet and bottom bracket.

STEP 3
Attach aluminum plate(s) to bottom of raceway.

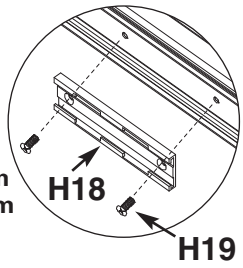

STEP 5
Insert panel studs

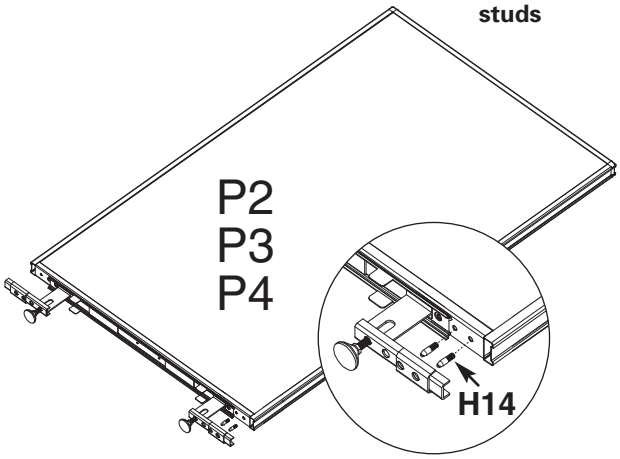

STEP 6
Fit panel studs from panel 2 and 3 into bottom bracket on panel 1, then loosely attach to top bracket

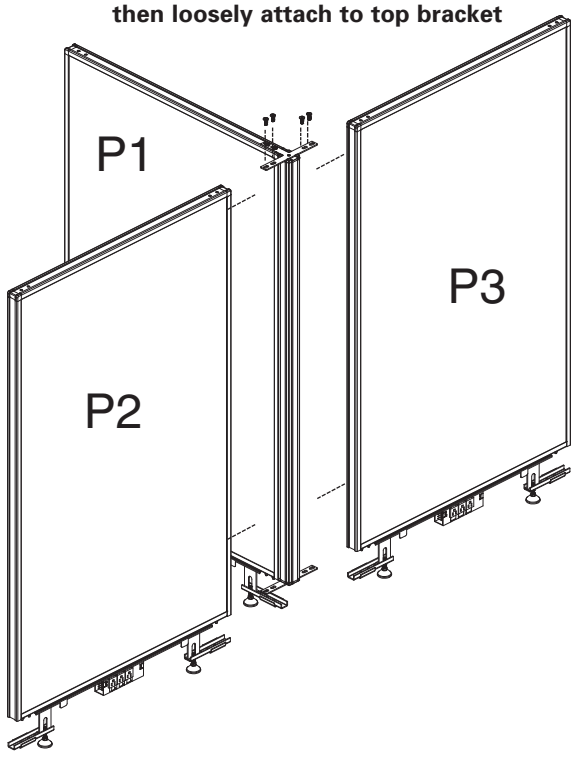

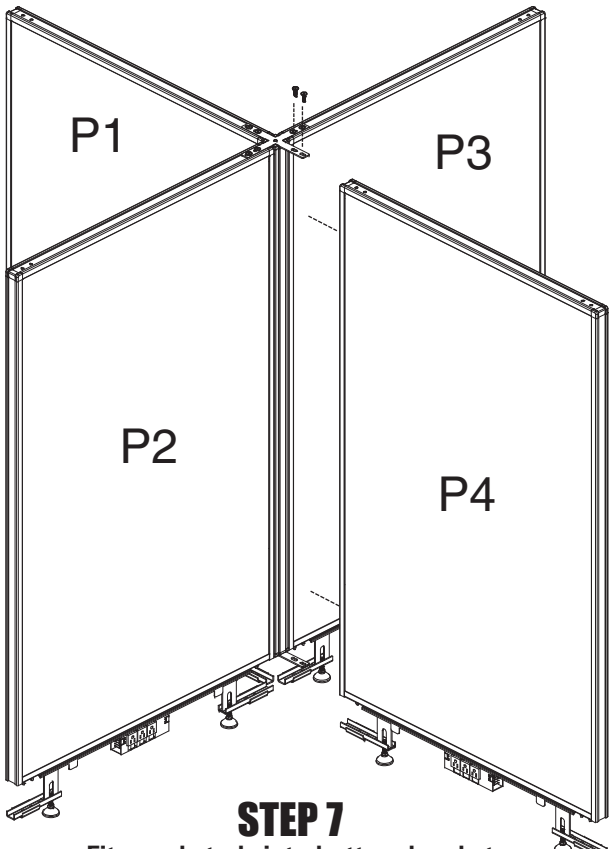

STEP 7
Fit panel studs into bottom bracket first, then into top bracket. Then tighten all bolts.

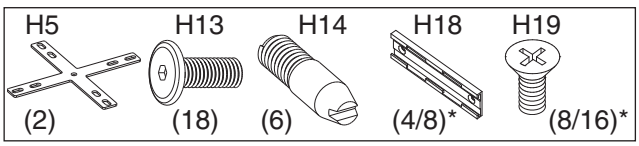

*1 plate, 2 screws per 36" panel. 2 plates, 4 screws per 48" or 60" panel.

OFFICE PARTITIONS

F

STEP 1
Remove feet from panel. Attach connectors to top and bottom.

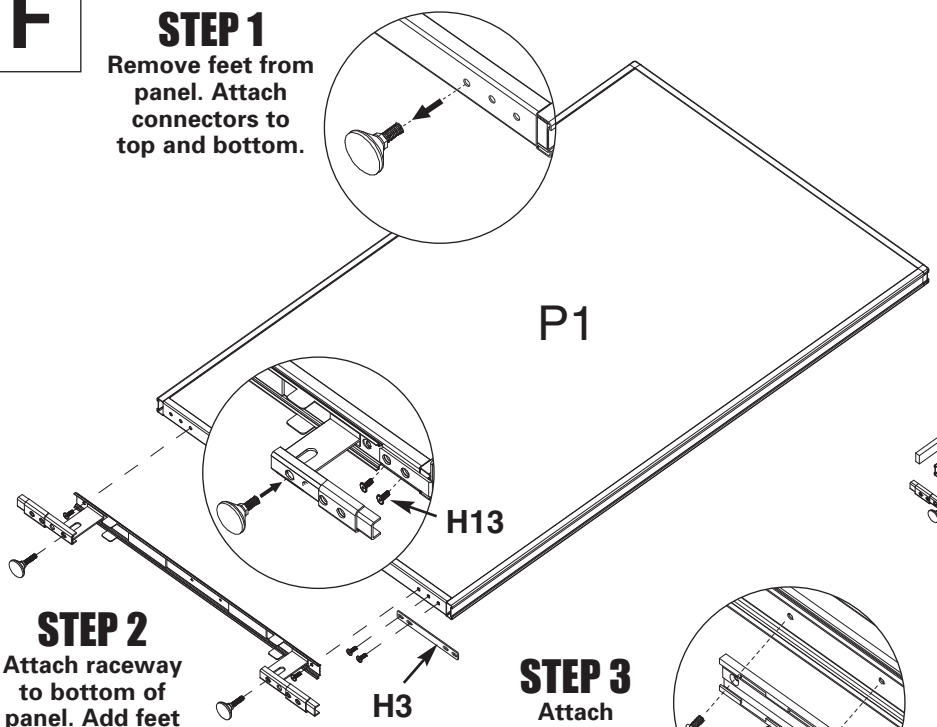

STEP 2
Attach raceway to bottom of panel. Add feet and bottom bracket.

STEP 3
Attach aluminum plate to bottom of raceway.

STEP 4
Insert panel studs. Foam seal may need to be trimmed to fit panel

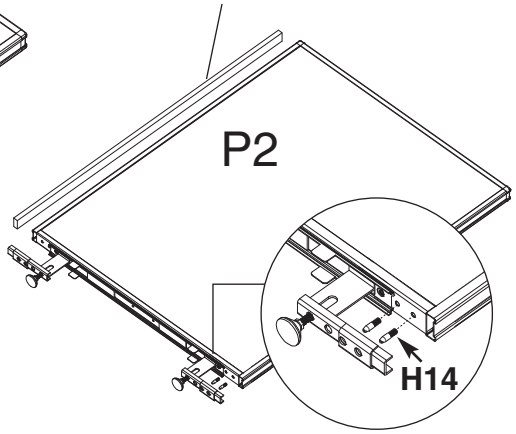

STEP 5
Bolt and tighten top bracket H8 onto panel 2.

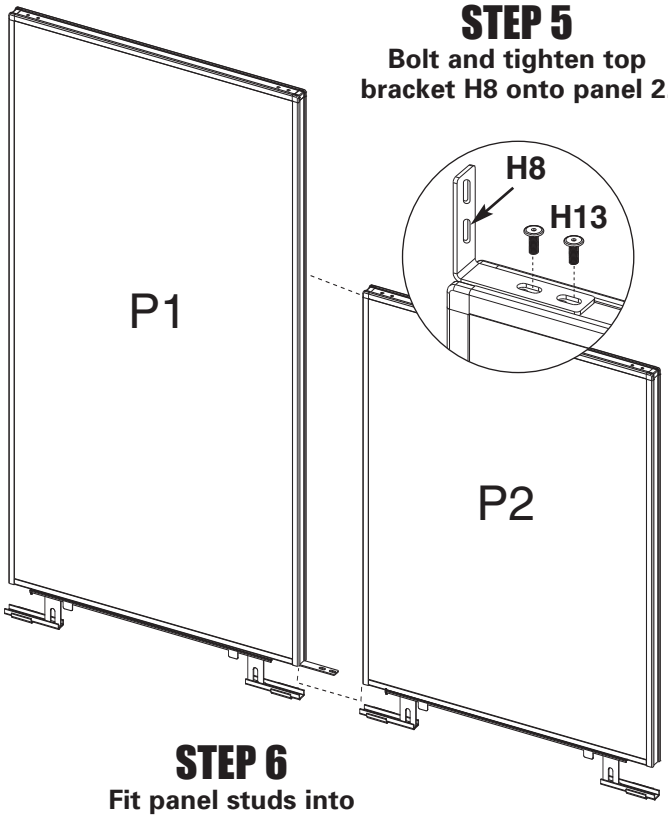

STEP 6
Fit panel studs into panel bracket.

STEP 6
Align panel to bracket and screw in using 2 self tapping screws and washers (H11) until tight (do not overtighten).

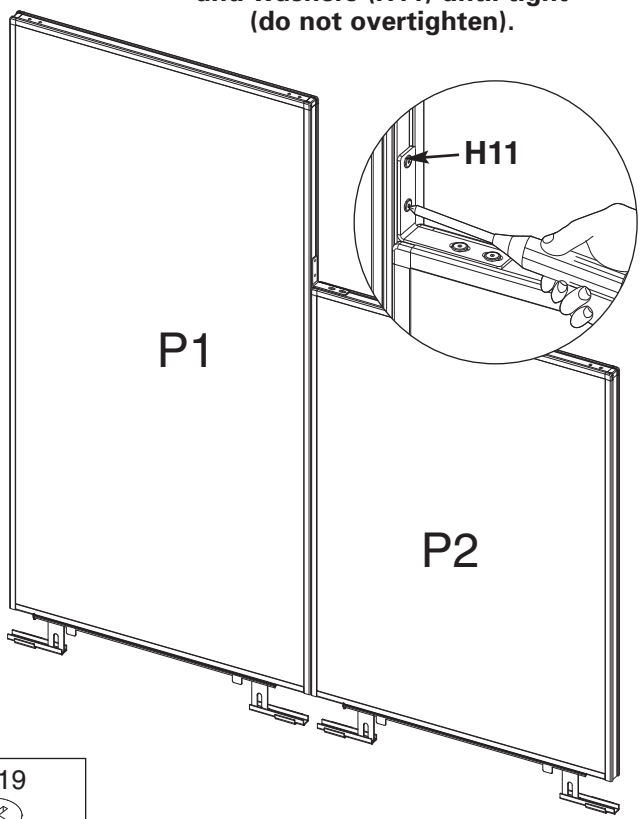

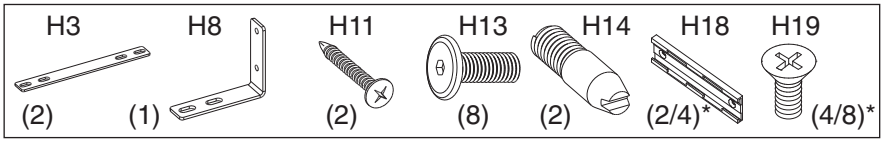

*1 plate, 2 screws per 36" panel. 2 plates, 4 screws per 48" or 60" panel.

OFFICE PARTITIONS

G

STEP 1
Remove feet from panel. Attach connectors to top and bottom.

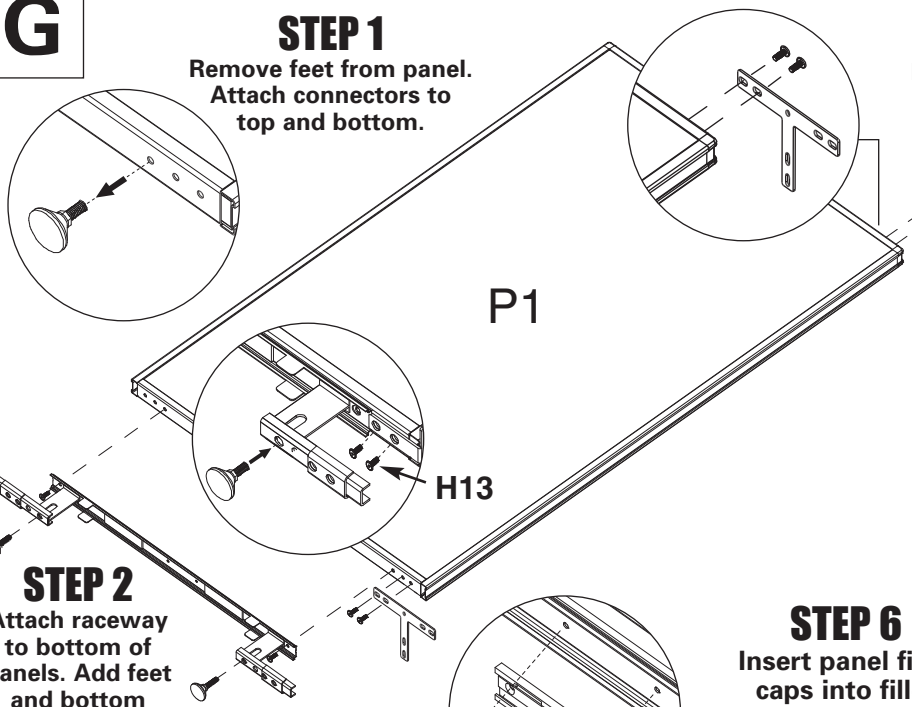

STEP 2
Attach raceway to bottom of panels. Add feet and bottom bracket.

STEP 3
Attach aluminum plate(s) to bottom of raceway.

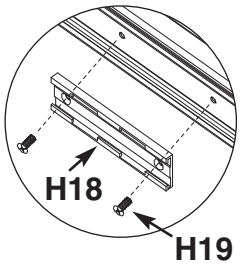

STEP 4
Loosely attach top bolts.

STEP 5
Insert panel studs.

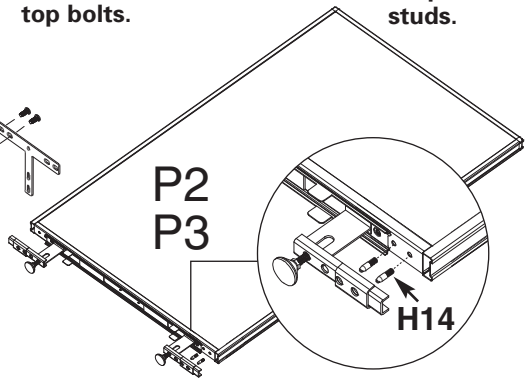

STEP 6
Insert panel filler caps into filler post top and bottom. Insert post into bottom bracket. Fit panel studs into bottom bracket, then bolt and tighten top bracket.

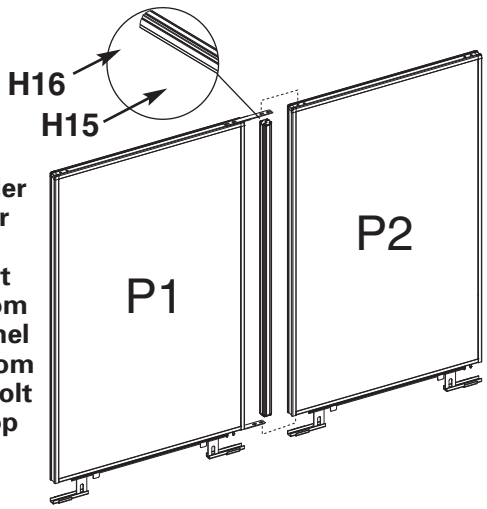

STEP 7
Assembled panels P1 and P2.

STEP 8
Fit panel studs into bottom bracket first, then mark position of vertical holes on filler post.

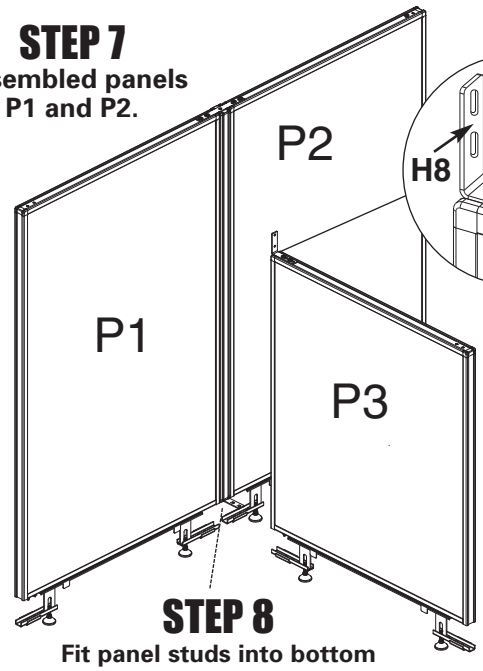

STEP 9
Bolt on top bracket H8 to short panel 3.

STEP 10
Drill holes where marked from previous Step 5.

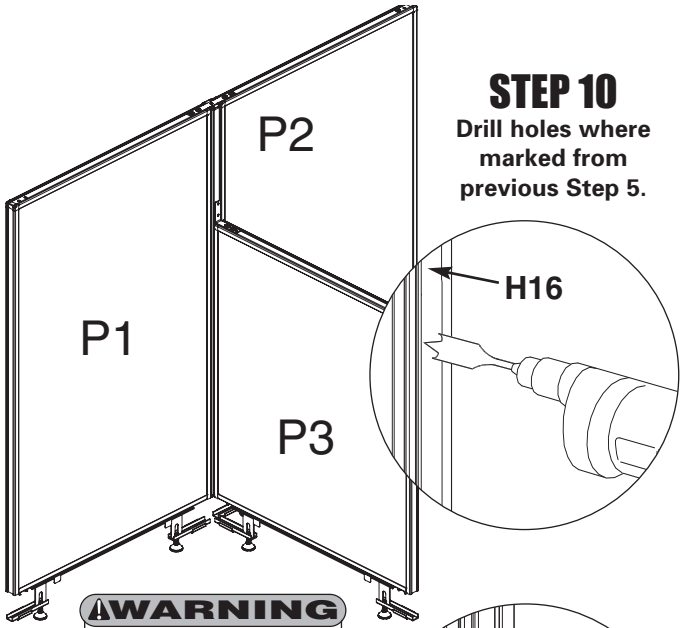

⚠WARNING
DO NOT FORCE DRILL

TOGGLE BOLT (H12) ASSEMBLY INTO FILLER POST

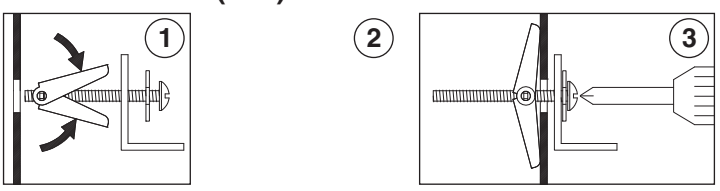

STEP 11
Follow toggle bolt assembly diagram.

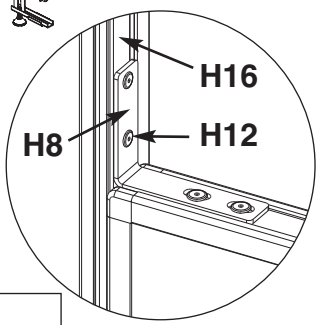

H4	H8	H10	H12	H13	H14	H15	H16	H18	H19
(1)	(1)	(1)	(2)	(14)	(4)	(2)	(1)	(3/6)*	(6/12)*

*1 plate, 2 screws per 36" panel. 2 plates, 4 screws per 48" or 60" panel.

OFFICE PARTITIONS

H - Right

STEP 1
Remove feet from panel. Attach connectors to top and bottom.

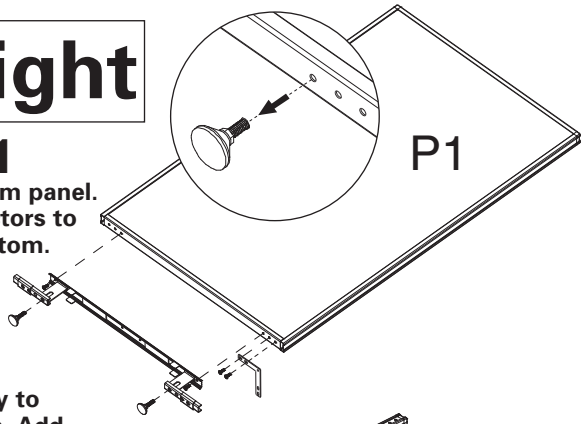

STEP 2
Attach raceway to bottom of panels. Add feet and bottom bracket.

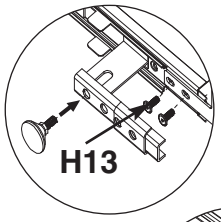

STEP 3
Attach aluminum plate(s) to bottom of raceway.

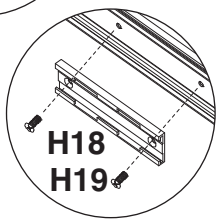

STEP 4
Insert panel studs.

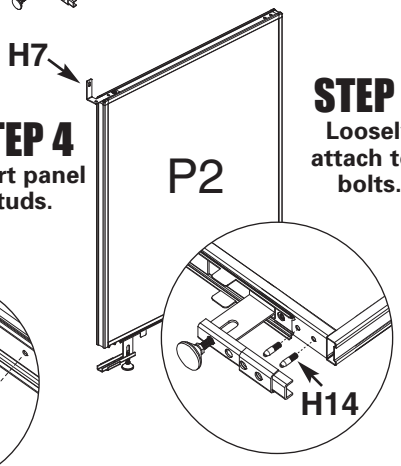

STEP 5
Loosely attach top bolts.

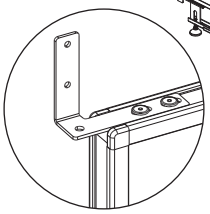

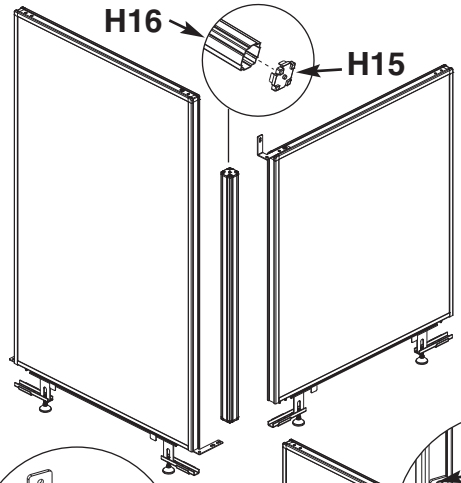

STEP 6
Insert panel filler caps into panel filler post top and bottom. Insert post into bottom bracket first, then into top bracket. Then tighten all bolts firmly

STEP 7
Align panel to bracket and screw in using 2 self tapping screws and washers (H11) until tight (do not overtighten).

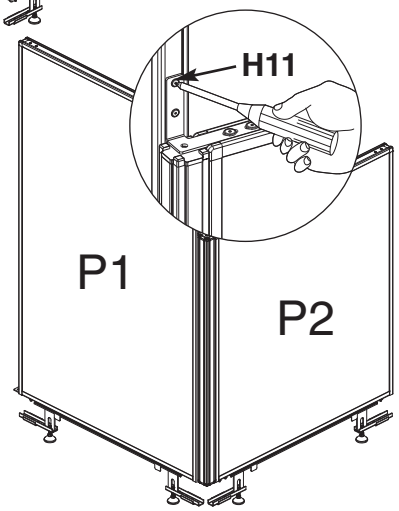

H - Left

STEP 1
Remove feet from panel. Attach connectors to top and bottom.

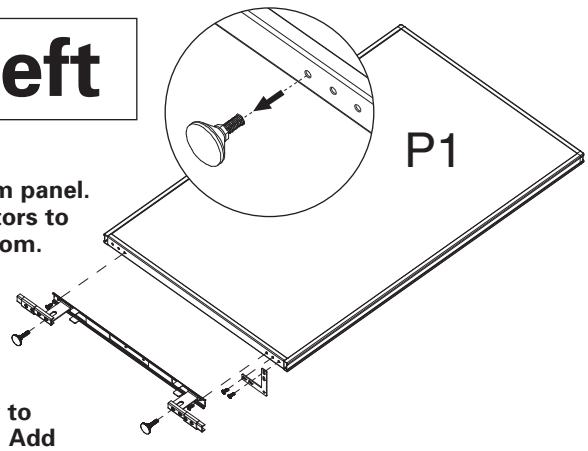

STEP 2
Attach raceway to bottom of panels. Add feet and bottom bracket.

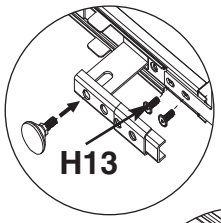

STEP 3
Attach aluminum plate(s) to bottom of raceway.

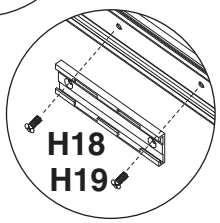

STEP 4
Insert panel studs.

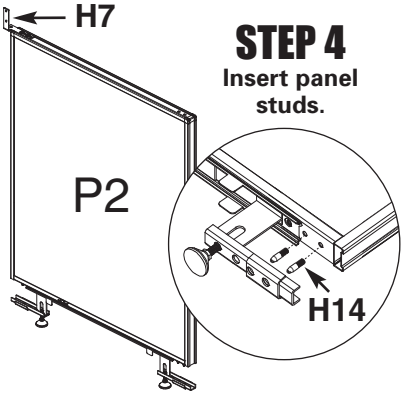

STEP 5
Loosely attach top bolts.

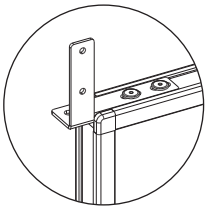

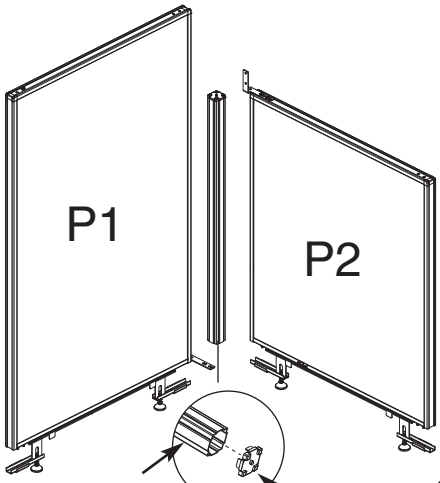

STEP 6
Insert panel filler caps into panel filler post top and bottom. Insert post into bottom bracket first, then into top bracket. Then tighten all bolts firmly

STEP 7
Align panel to bracket and screw in using 2 self tapping screws and washers (H11) until tight (do not overtighten).

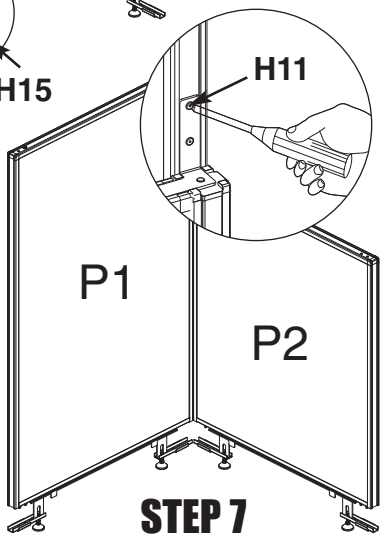

H2	H7	H11	H13	H14	H15	H16	H18	H19
(1)	(2)	(2)	(8)	(2)	(2)	(1)	(2/4)*	(4/8)*

*1 plate, 2 screws per 36" panel. 2 plates, 4 screws per 48" or 60" panel.

OFFICE PARTITIONS

I

STEP 1
Remove feet from panel. Attach connectors to top and bottom.

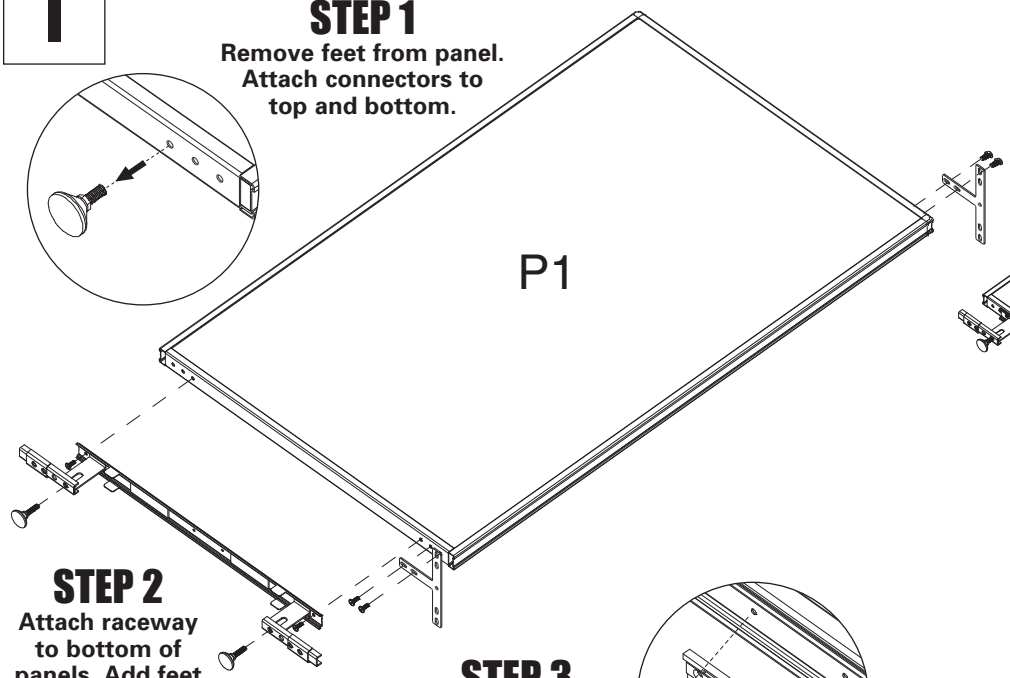

STEP 2
Attach raceway to bottom of panels. Add feet and bottom bracket.

STEP 3
Attach aluminum plate(s) to bottom of raceway.

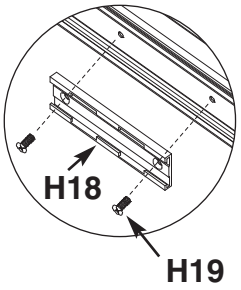

STEP 4
Insert panel studs.

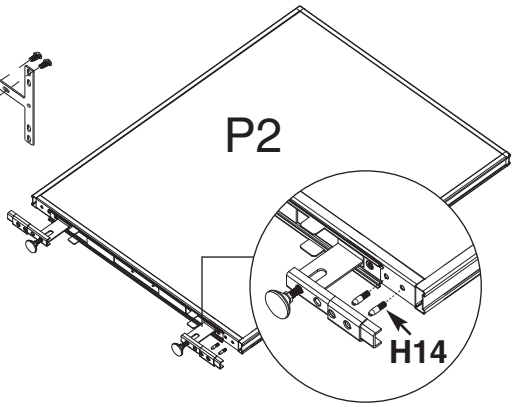

STEP 5
Loosely attach top bolts

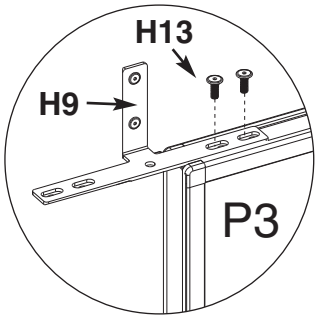

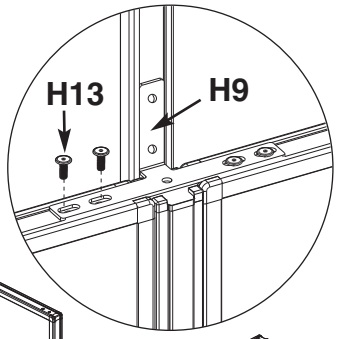

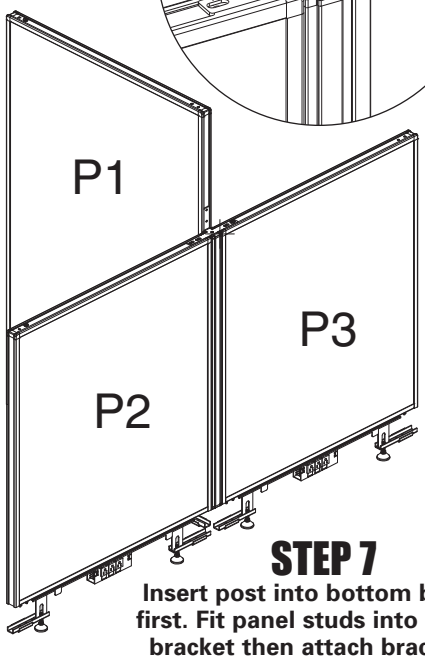

STEP 6
Insert panel filler caps into panel filler post top and bottom

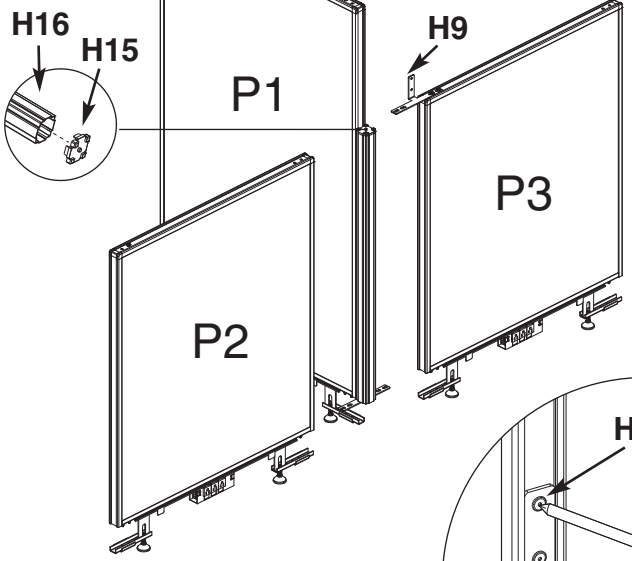

STEP 7
Insert post into bottom bracket first. Fit panel studs into bottom bracket then attach bracket to panel 2. Tighten bolts.

STEP 8
Align panel 1 to bracket and screw in self tapping screws and washers H11 into side of panel 1.

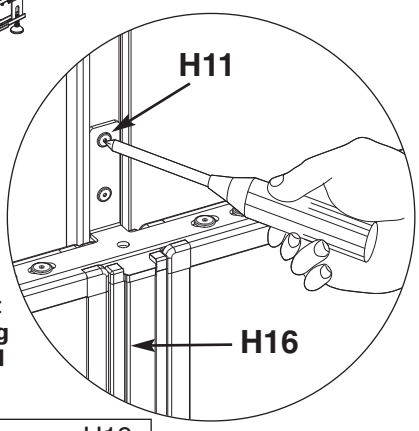

H4	H9	H11	H13	H14	H15	H16	H18	H19
(2)	(1)	(2)	(12)	(4)	(2)	(1)	(3/6)*	(6/12)*

*1 plate, 2 screws per 36" panel. 2 plates, 4 screws per 48" or 60" panel.

J INSTALLATION OF POWER BOX

⚠WARNING

Fire Risk. Connection to the power source, by a licensed electrician, and quantity of receptacles used for a given circuit, must be in compliance with all national and local electrical codes. Failure to observe this warning could result in a fire.

Risk of electrical shock. Be sure in-feed power is disconnected to prevent personal injury.

No more than 16 simplex receptacles may be supplied by one 15 AMP circuit.

No more than 20 simplex receptacles may be supplied by one 20 AMP circuit.

Electrical connections between panels must be disconnected prior to removal of a mechanical connection.

Insert power box to rail under panel. No tools required.

Move power box under panel/raceway and align notches on top of power box(es) with openings on aluminum plate on bottom of raceway. Push up to connect the two parts and move left or right approximately 1 inch until power box feels snug.

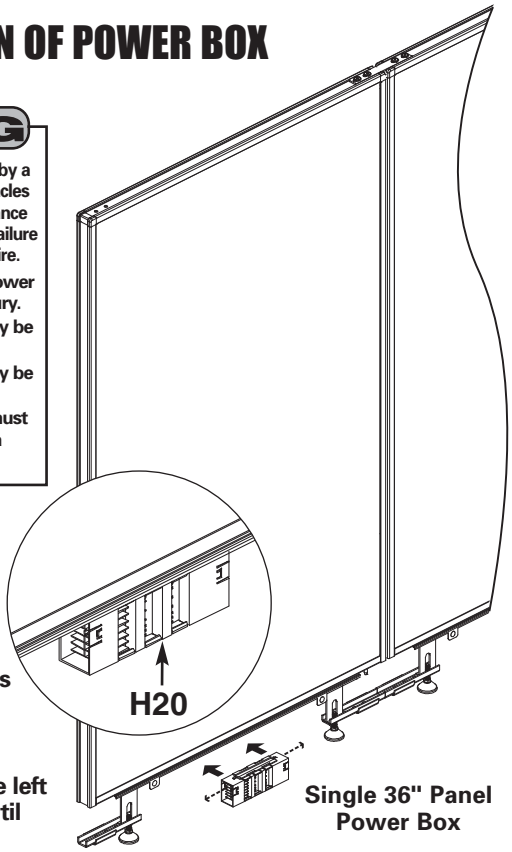

Single 36" Panel Power Box

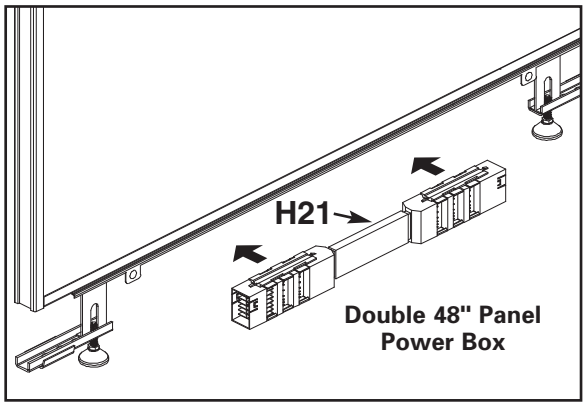

Double 48" Panel Power Box

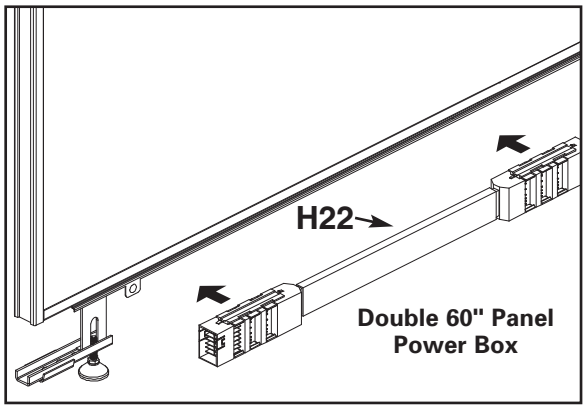

Double 60" Panel Power Box

1 36" PANEL

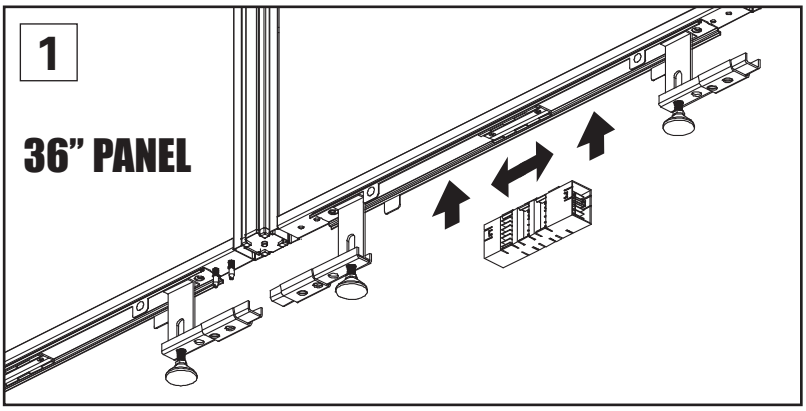

2 48" & 60" PANEL

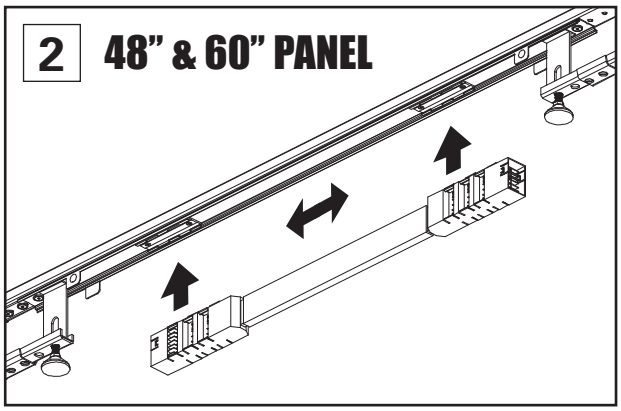

L CABLE INSTALLATION

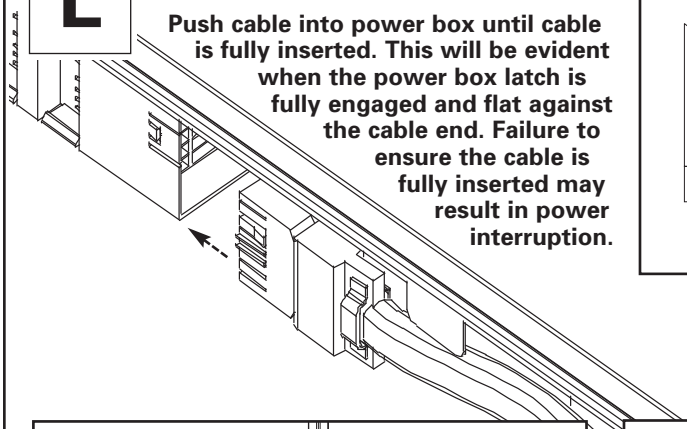

Push cable into power box until cable is fully inserted. This will be evident when the power box latch is fully engaged and flat against the cable end. Failure to ensure the cable is fully inserted may result in power interruption.

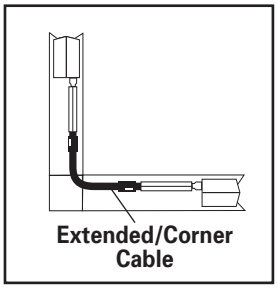

Extended/Corner Cable

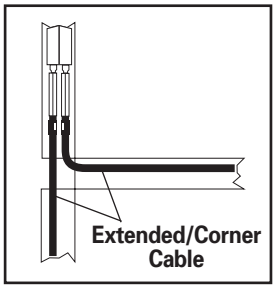

Extended/Corner Cable

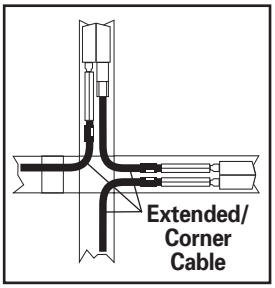

Extended/ Corner Cable

When connecting around a 90° corner or across a 3 way or 4 way, discard the panel to panel cable and use the extended/corner cable.

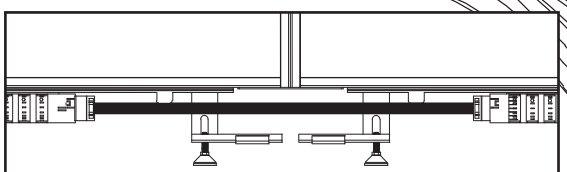

Cables run between panels as needed



Panel 1 Panel 2 Panel 3

Pass Thru Application

OFFICE PARTITIONS

L

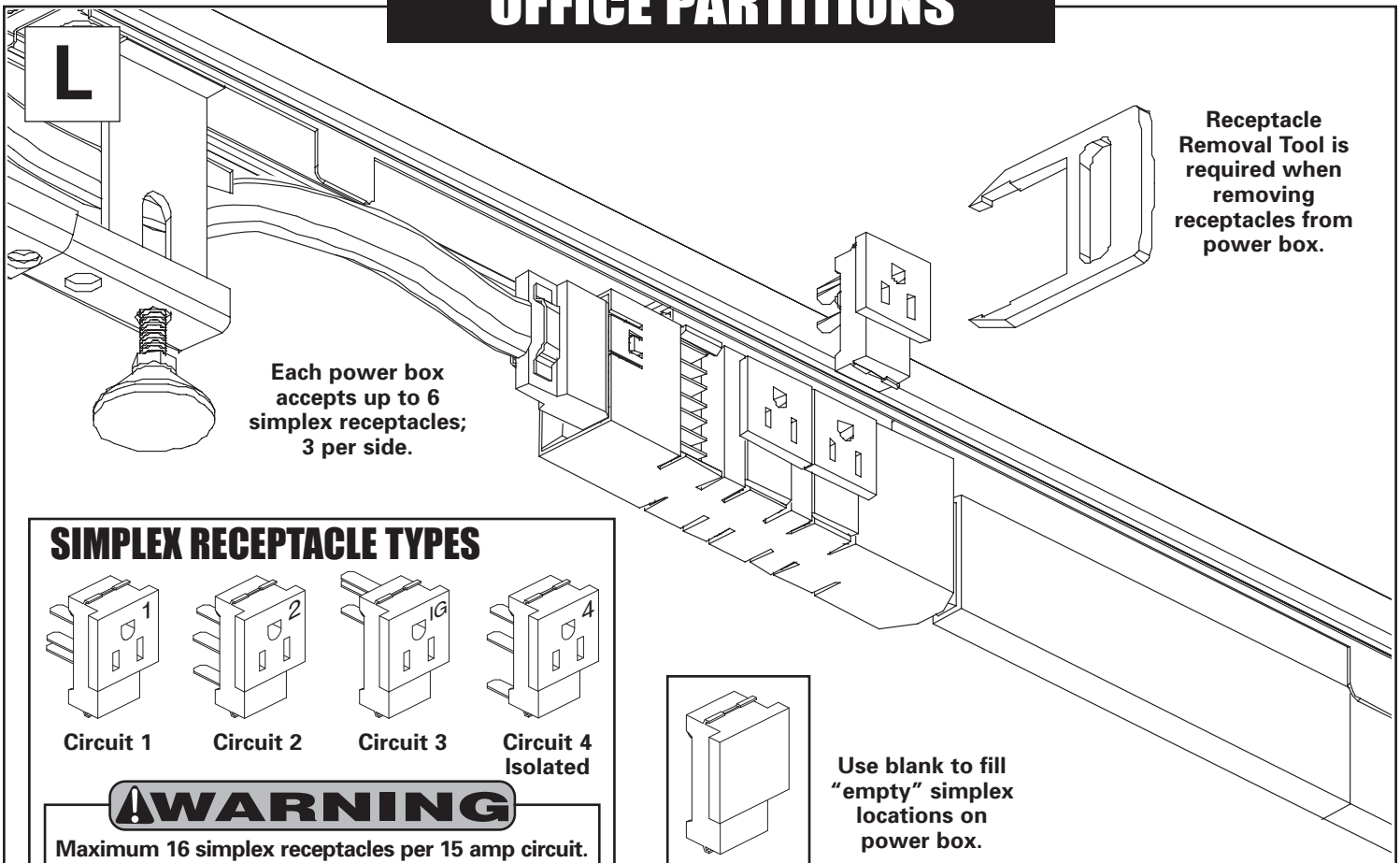

Receptacle Removal Tool is required when removing receptacles from power box.

Each power box accepts up to 6 simplex receptacles; 3 per side.

SIMPLEX RECEPTACLE TYPES

Circuit 1 | Circuit 2 | Circuit 3 | Circuit 4 Isolated

WARNING

Maximum 16 simplex receptacles per 15 amp circuit.
Maximum 20 simplex receptacles per 20 amp circuit.

Blank

Use blank to fill "empty" simplex locations on power box.

M

CONNECTING POWER SOURCE

STEP 1

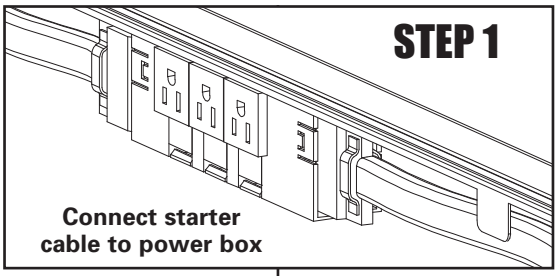

Connect starter cable to power box

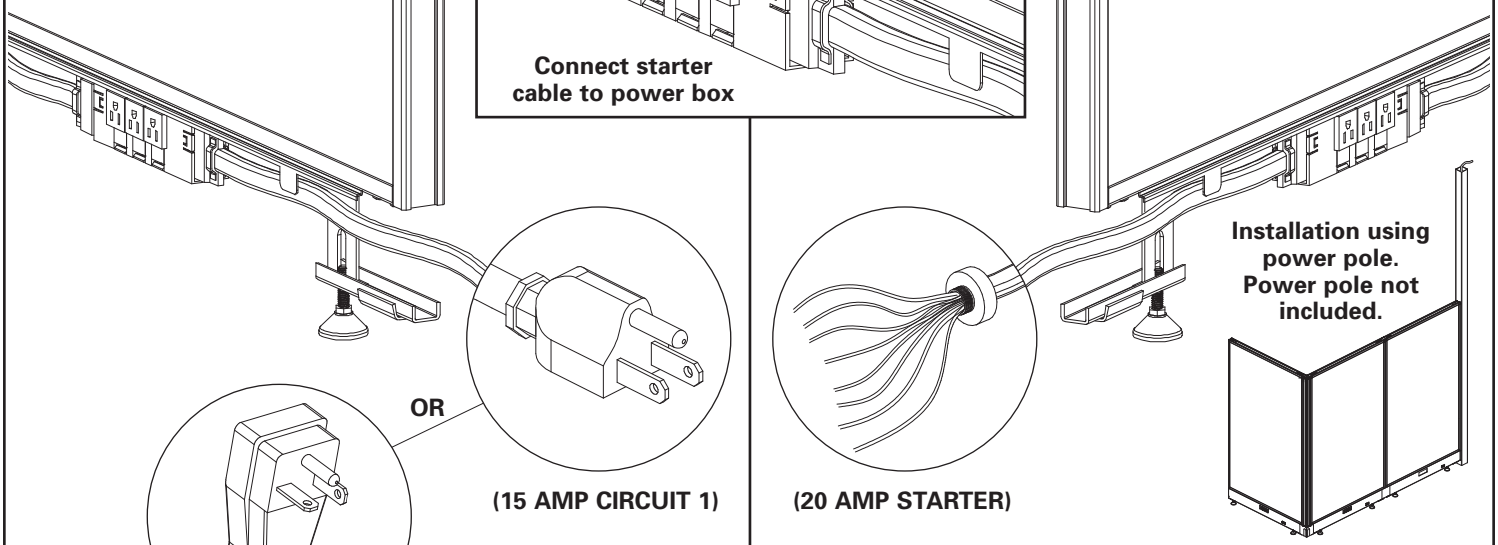

OR

(15 AMP CIRCUIT 1)

(20 AMP CIRCUIT 1)

(20 AMP STARTER)

Installation using power pole. Power pole not included.

STEP 2

Use either a 15 or 20 AMP circuit to supply power

OR

Have a licensed electrician install a hard wired connection.

The power system is an eight wire system consisting of four circuits. Each circuit is rated at 20 amps/120 volts maximum. Circuit 1 (black), Circuit 2 (red) and Circuit 4 (pink) share a common neutral (white) and ground (green) while Circuit 3 (blue) has an individual neutral (gray) and ground (green/yellow). Circuits rated at 20 amps/120 volts, or as permitted by local codes.

N

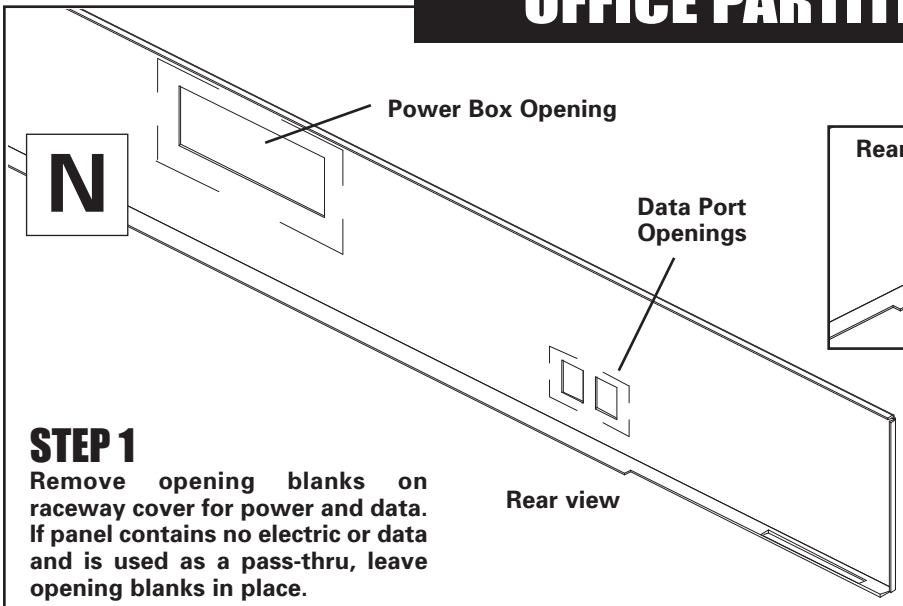

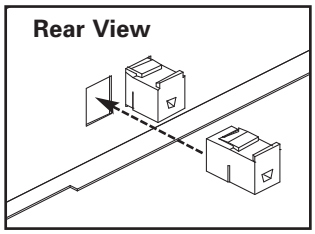

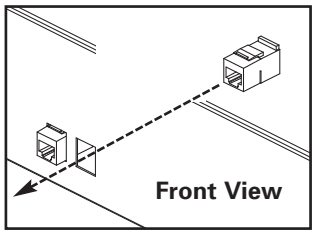

STEP 1

Remove opening blanks on raceway cover for power and data. If panel contains no electric or data and is used as a pass-thru, leave opening blanks in place.

STEP 2

Insert data ports and data cables before installing raceway cover. (Phone connectors, data connectors and cables not included.) Removable, hinged raceway cover allows easy access to receptacles and cables

O

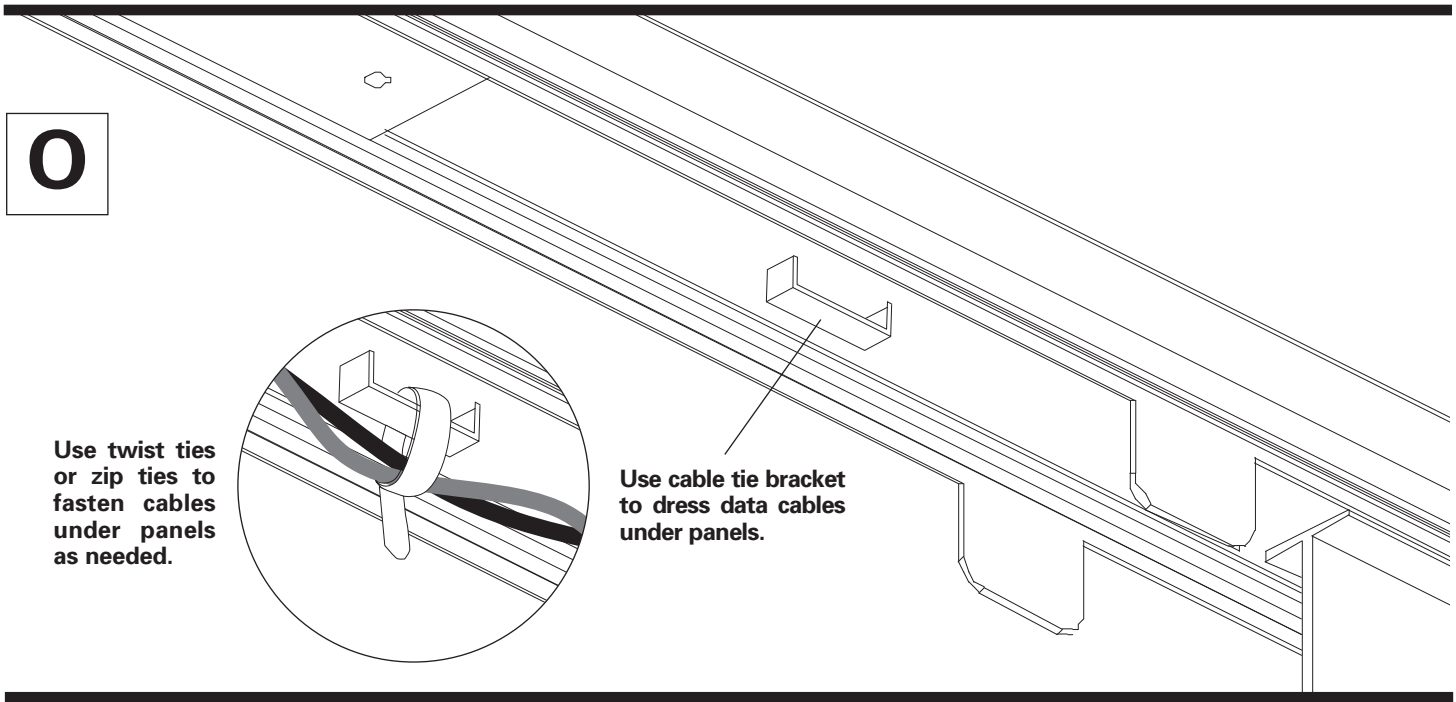

Use twist ties or zip ties to fasten cables under panels as needed.

Use cable tie bracket to dress data cables under panels.

P

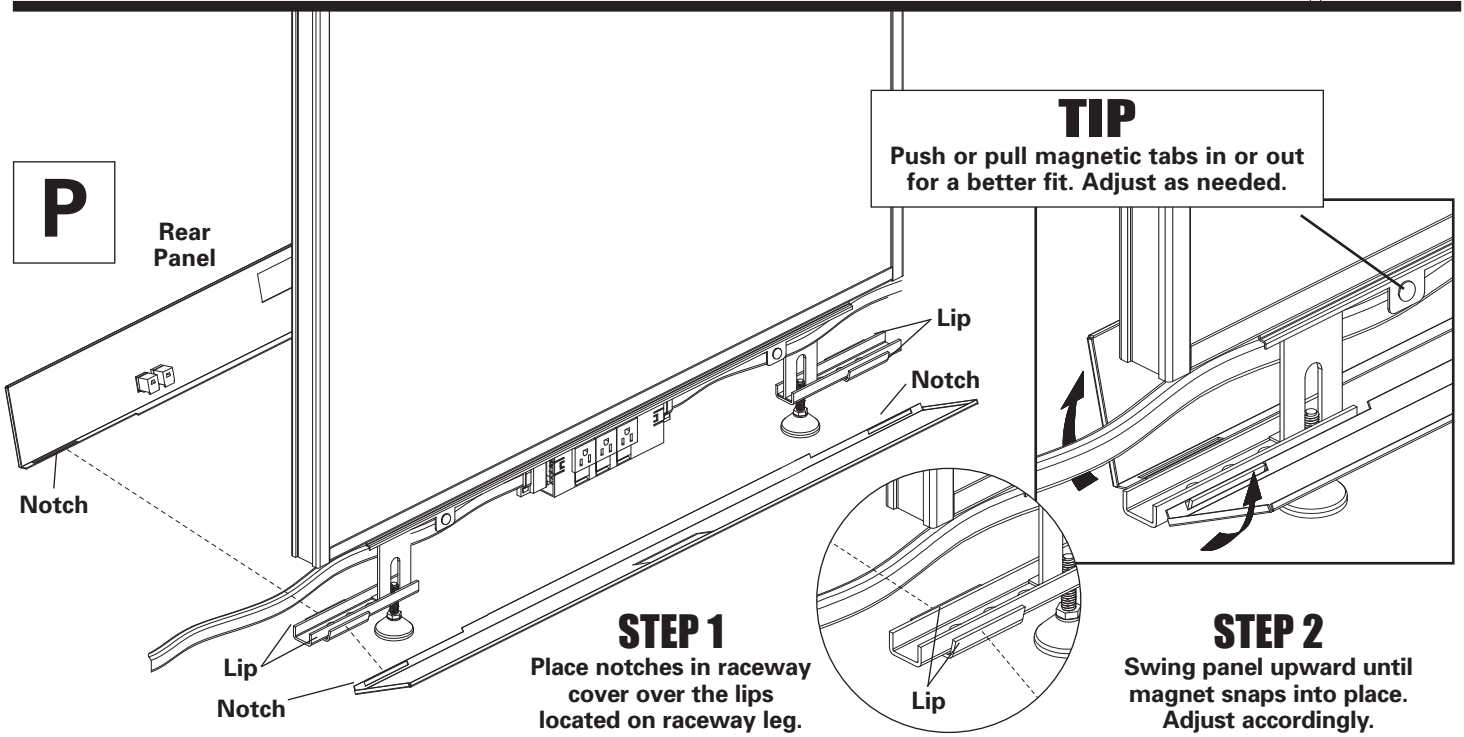

TIP

Push or pull magnetic tabs in or out for a better fit. Adjust as needed.

STEP 1

Place notches in raceway cover over the lips located on raceway leg.

STEP 2

Swing panel upward until magnet snaps into place. Adjust accordingly.

OFFICE PARTITIONS

Q

STEP 1

Depending on where your power source comes from, remove opening blank from End Cap, Three Way or Corner Cap. Place over starter cable and attach to bottom of panel raceway. Adjust accordingly.

STEP 2

If power source does not exit from End, Corner or Three Way, leave opening blank in place and attached cap as needed.

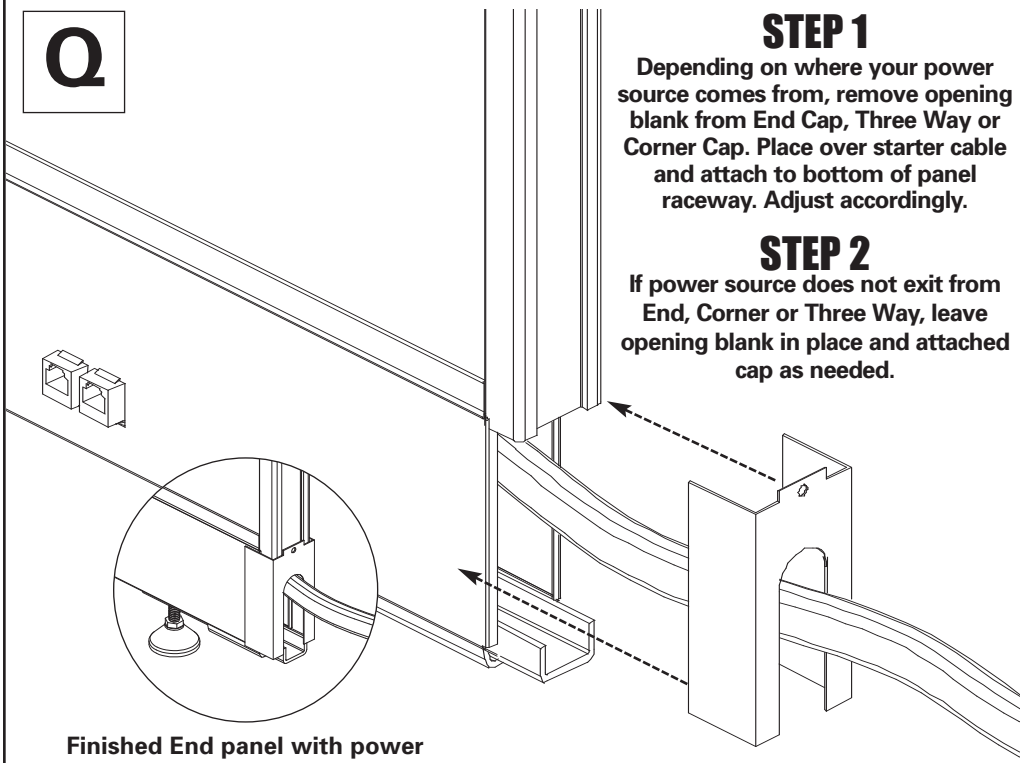

Finished End panel with power source exiting raceway.

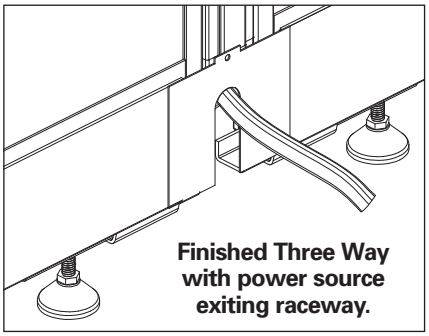

Finished Three Way with power source exiting raceway.

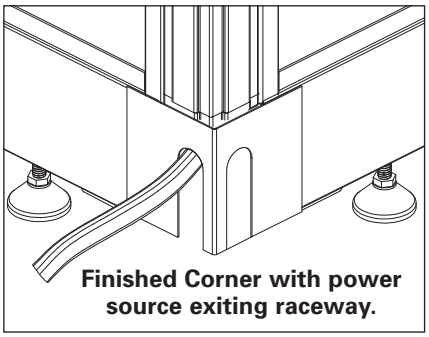

Finished Corner with power source exiting raceway.