Assembly Instruction Manual

Customer Service
US: 1-800-645-2986

Contents

Ref.	Qty.	Description	Ref.	Qty.	
1	4	Post	H4	4	Rubber Bumper (Optional)
2	2	Shelf	H5	8 (Set)	Shelf Clip
3	2	Side Panel	H6	2	Swivel Caster / Brake (Optional)
4	1	Back Panel assembly	H7	2	Plain Washer
5	1	Left Door / Hasp	H8	2	3/8 - 16 Security Screw
6	1	Right Door / Locking Mechanism	H9	1	Security Key
H1	4	Adjustable Foot Leveler	H10	10	Plastic End Cap
H2	6	Bushing	H11	1	Steel Welded Plate
H3	2	Swivel Caster (Optional)			

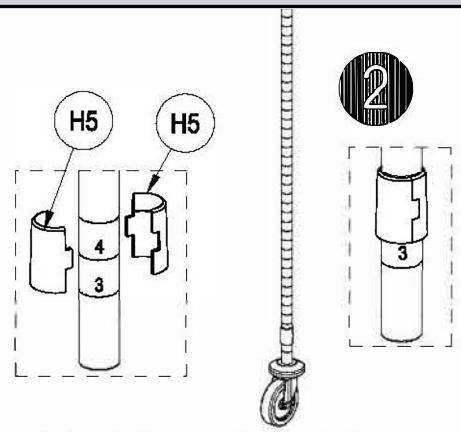

Place one half of the split sleeve on the post with the wider end facing down. Align the internal ridge with the groove on the post and snap it into place. Attach the matching half and snap it on as shown.

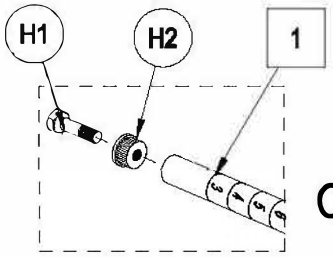

OR

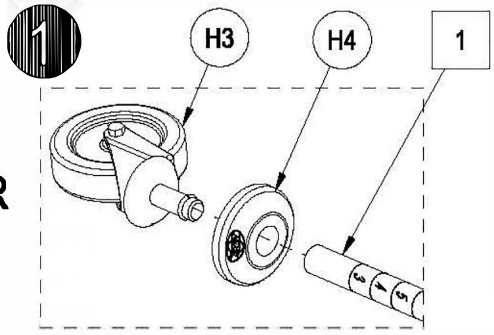

Insert tapered foot bushing into the bottom of each post. Seat securely by tapping with a rubber mallet. Screw the adjustable foot levelers into each bushing.

Slide rubber bumpers onto the bottom of each post. Insert the swivel stem casters and tap with a mallet until fully seated. (Tapered foot bushings and levelers are not needed when using stem casters.)

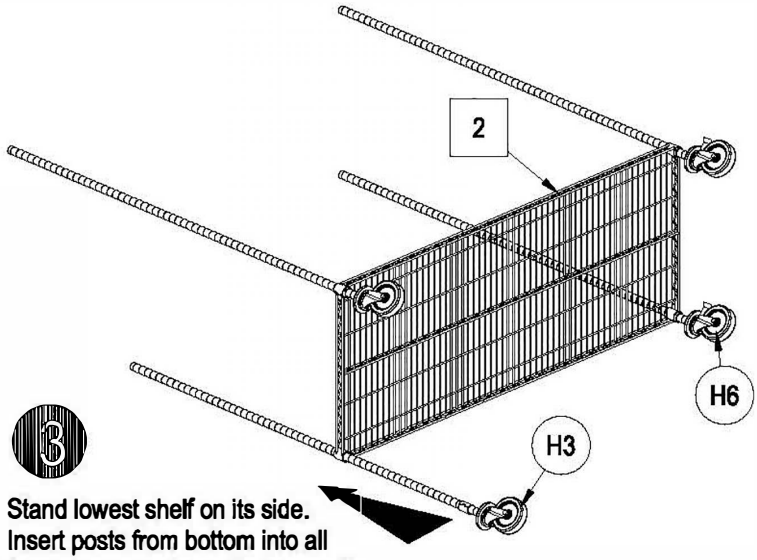

Stand lowest shelf on its side. Insert posts from bottom into all four corners so the split sleeves fit inside each corner. Stand upright

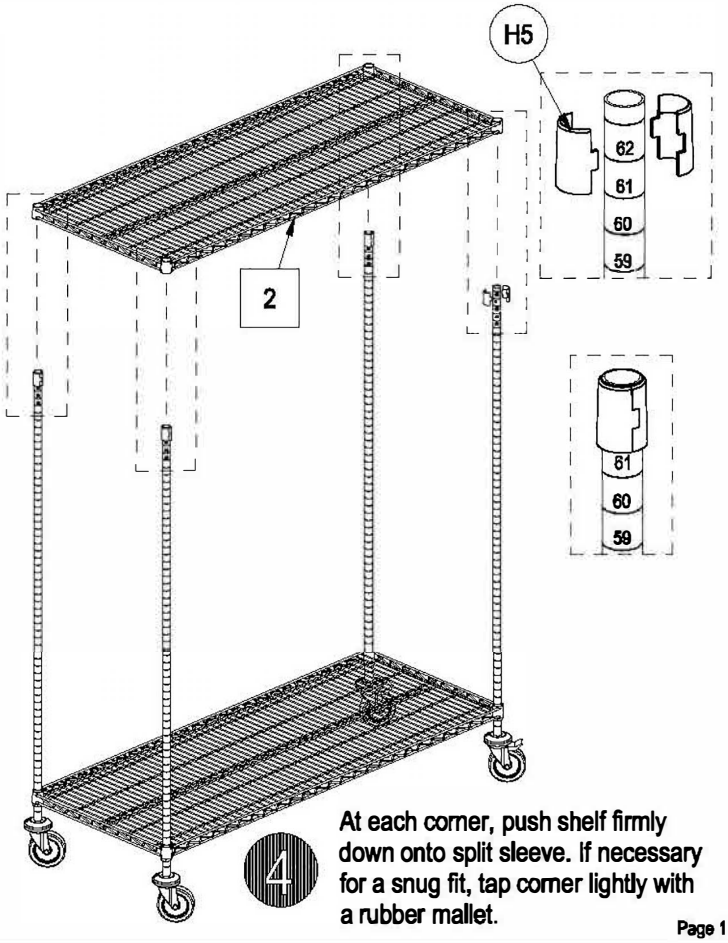

At each corner, push shelf firmly down onto split sleeve. If necessary for a snug fit, tap corner lightly with a rubber mallet.

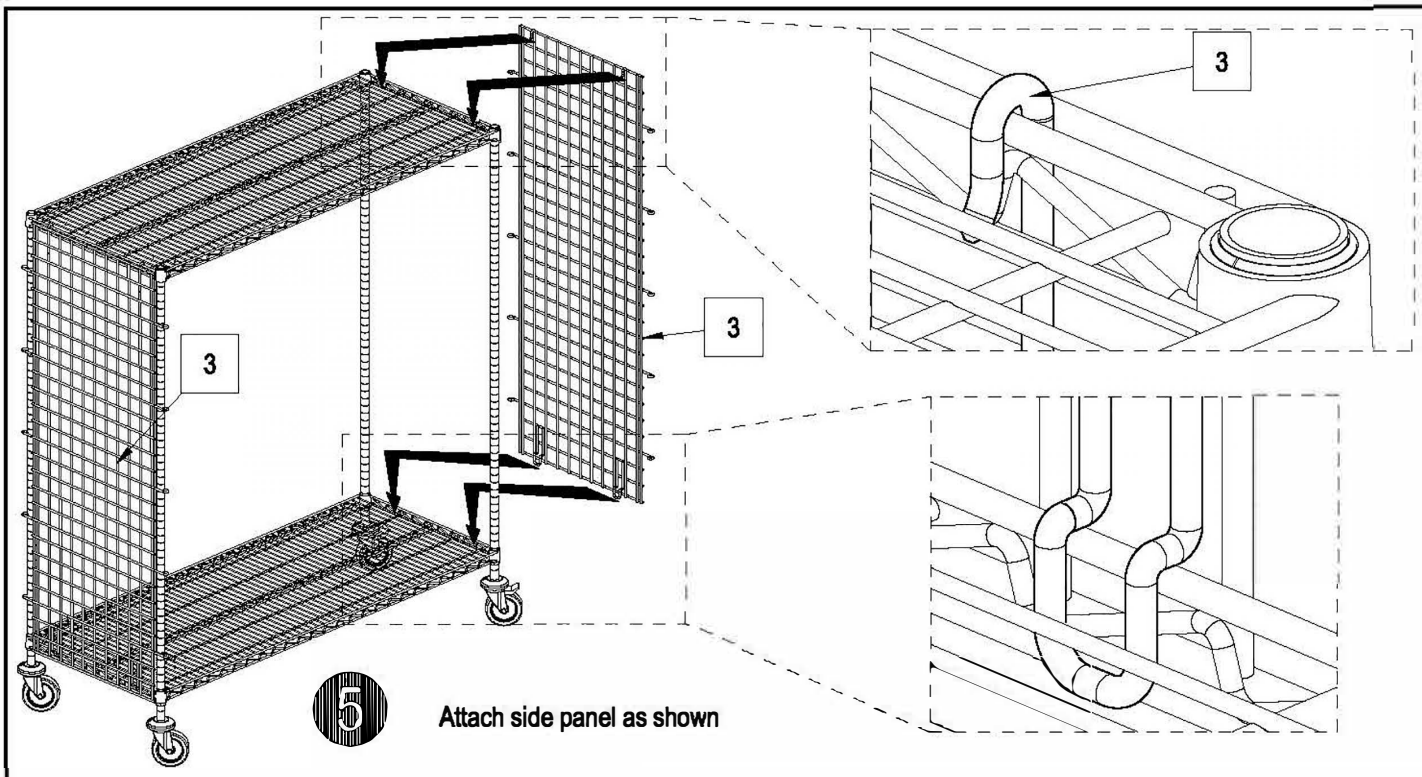

5 Attach side panel as shown

Press threaded bushings into the post until fully seated

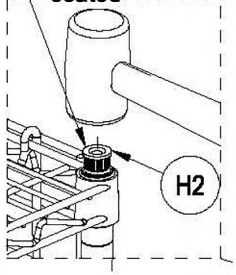

6

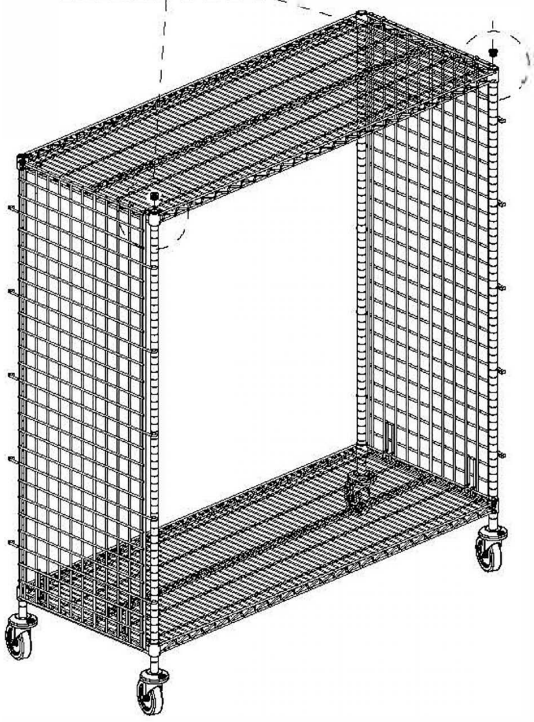

7

If your unit includes an optional shelf, install the shelf first–before installing the back and side panels.
Fasten back panel with security hardware provided

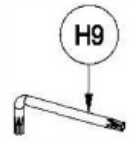

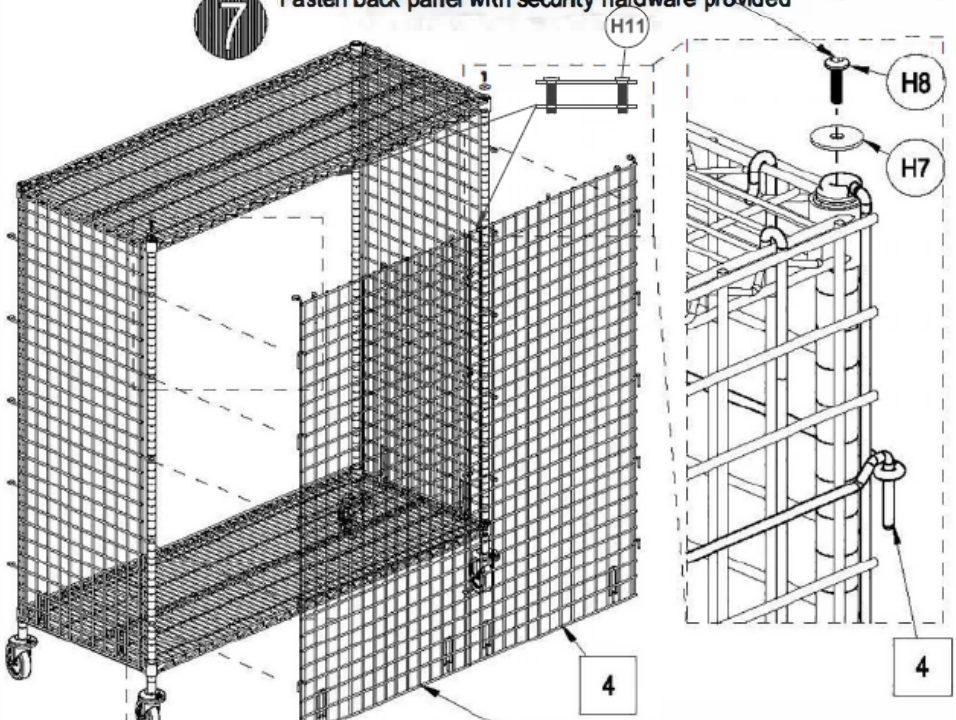

Align the back panel with the side panels and slide it into place

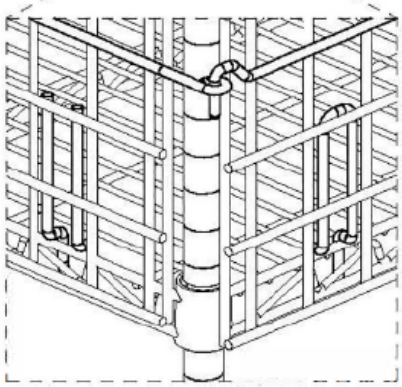

Note:

Latch mechanism face outward

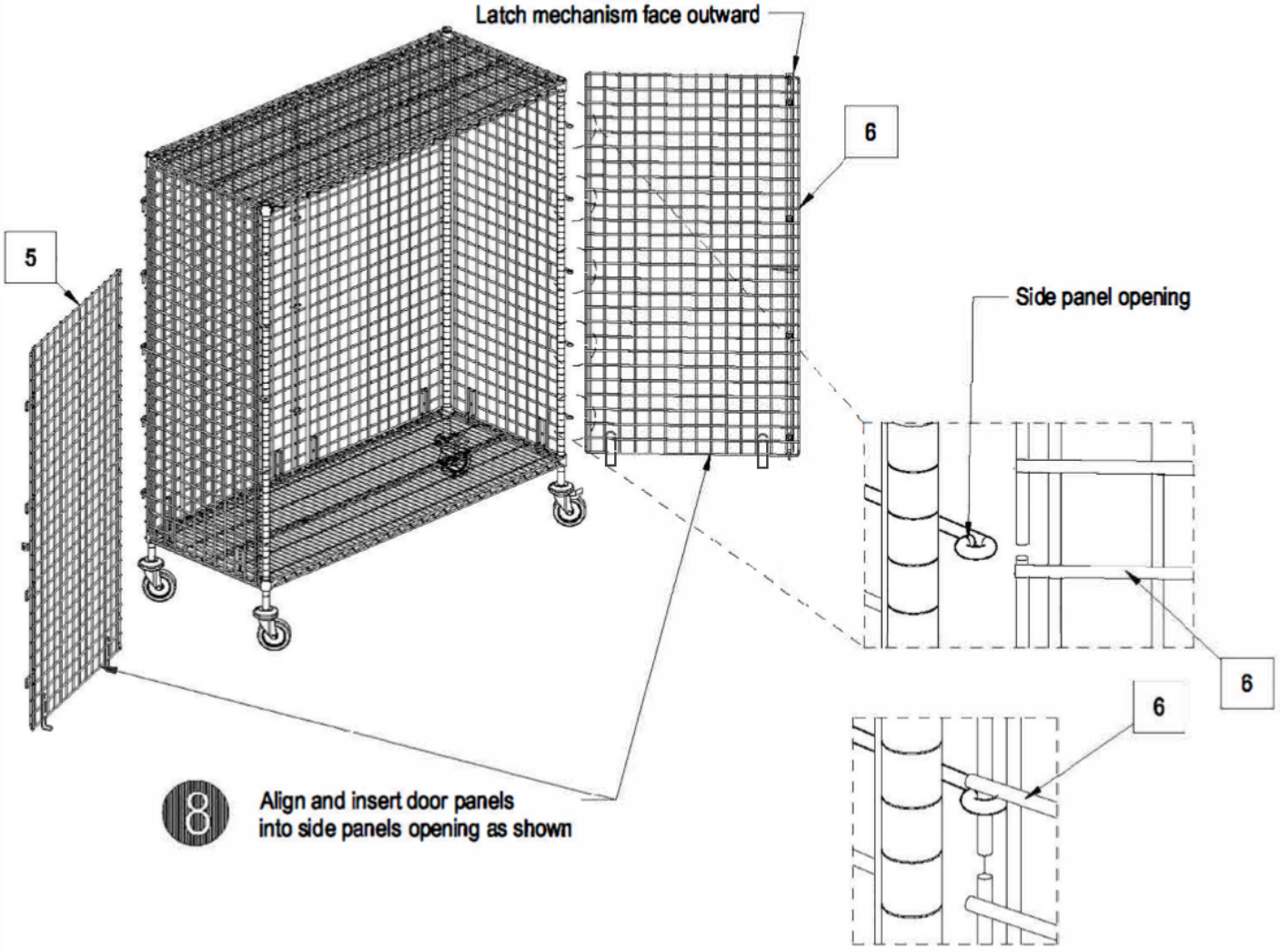

8 Align and insert door panels into side panels opening as shown

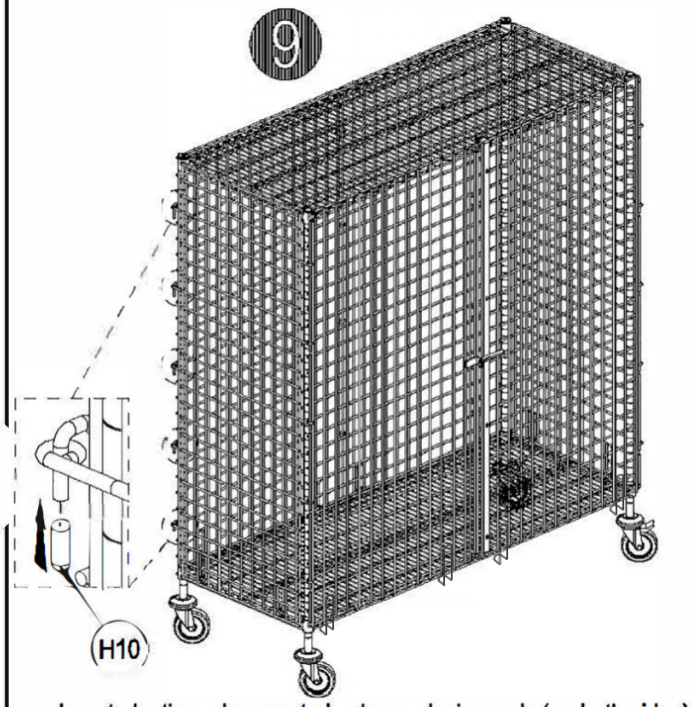

Insert plastic end cap onto back panel wire ends (on both sides)

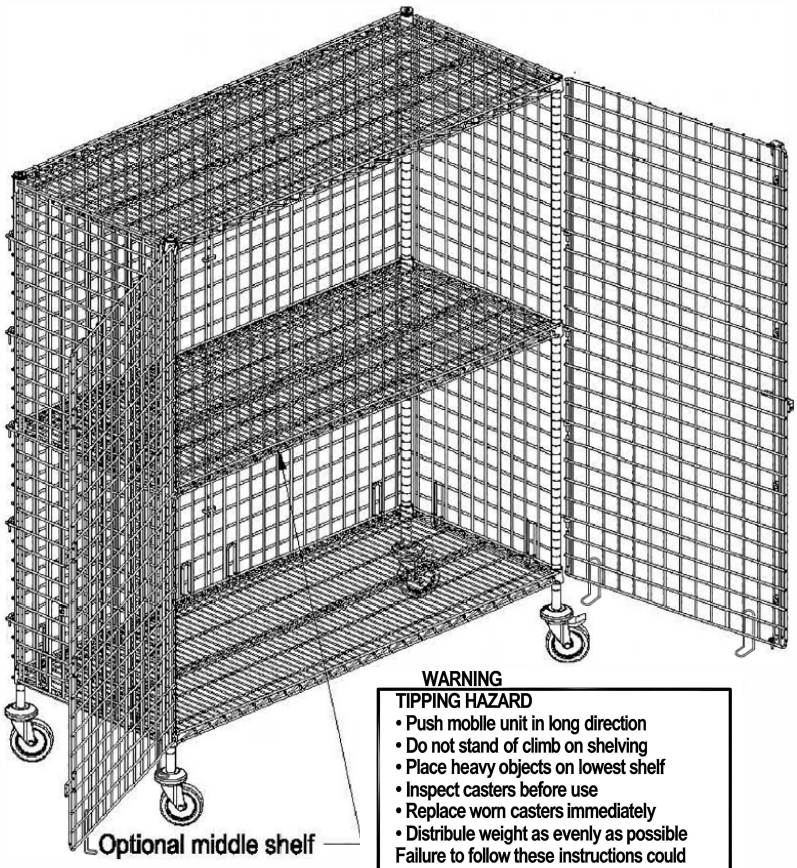

Optional middle shelf

WARNING

TIPPING HAZARD

- Push mobile unit in long direction
- Do not stand of climb on shelving
- Place heavy objects on lowest shelf
- Inspect casters before use
- Replace worn casters immediately
- Distribule weight as evenly as possible

Failure to follow these instructions could result in personal injury or property damage