GLOBAL™ INDUSTRIAL
We can supply that.®

User Manual	Manual de Usuario	Manuel de l'Utilisateur
Customer Service US: 1-800-645-2986	Servicio de atención al Cliente US: 1-800-645-2986	Service à la clientèle Canada: 888-645-2986

Plastic Guard Rail System

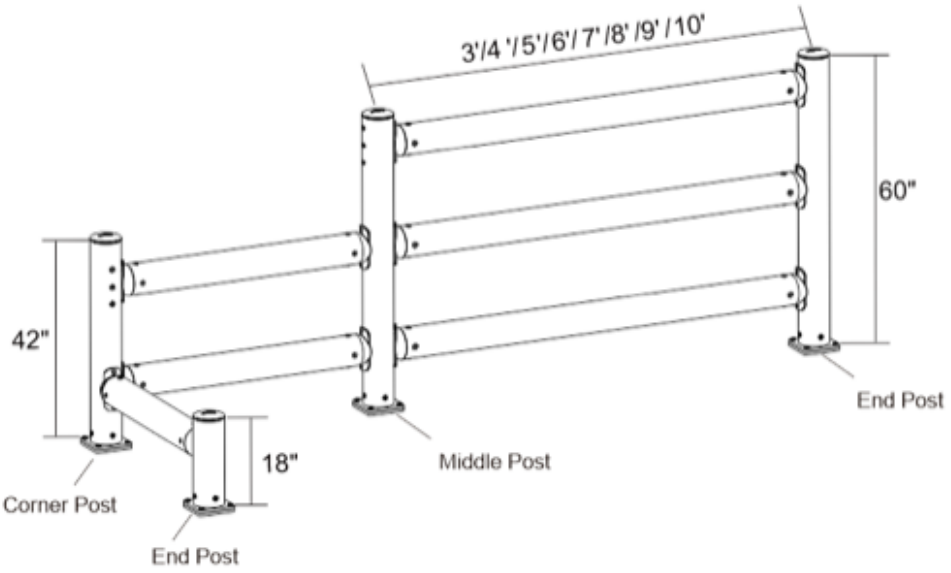

Hardware	
Ref.	**Description**
H1	1/2" Dia. x 6" L Concrete bolts and Washers
H2	1/2" Dia. x 1 1/2" L Hex Socket Head Screws

Tools Required

For floor drilling

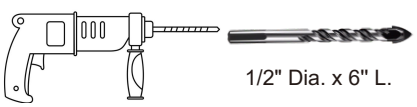

1/2" Dia. x 6" L.

Hammer Driver — Masonry Drill Bit



Wet-Dry Vacuum

Installation for H1



Impact Driver



3/4" Hex Socket

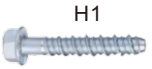

H1

1/2" Dia. x 6" L
Hex head size: 3/4"
Concrete bolt

Installation for H2



Electric Drill



5/16" Hex Head Bit



H2

1/2" Dia. x 1 1/2" L.
Inner Hex size: 5/16"
Hex Socket Head Screws

Other



Pencil



Tape Measure



Eye Protection

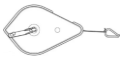

Chalk Line Tool

Patent Pending

Plastic Guard Rail System

Plastic Guard Rails

670873- 3'L
670874- 4'L
670875- 5'L
670876- 6'L
670877- 7'L
670878- 8'L
670879- 9'L
670880- 10'L

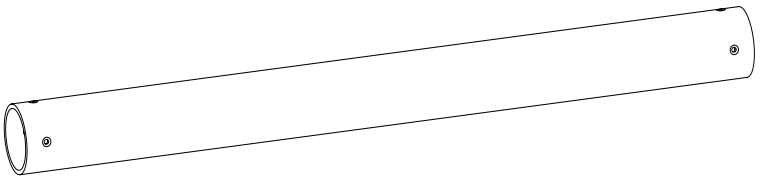

18''H Posts

End Post
670881

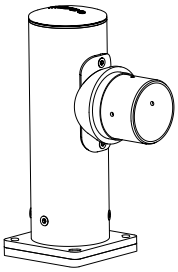

H1 x4
H2 x4

Corner Post
670882

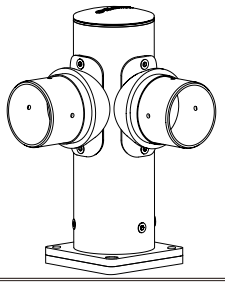

H1 x4
H2 x8

Middle Post
670883

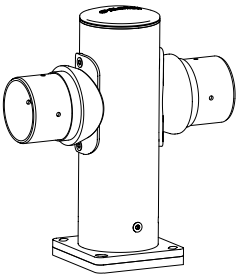

H1 x4
H2 x8

42''H Posts

End Post
670884

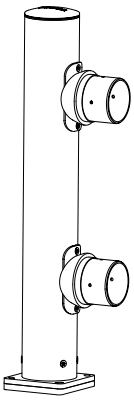

H1 x4
H2 x8

Corner Post
670885

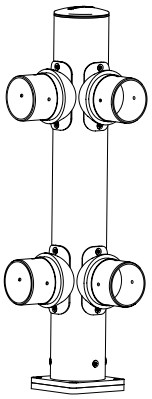

H1 x4
H2 x16

Middle Post
670886

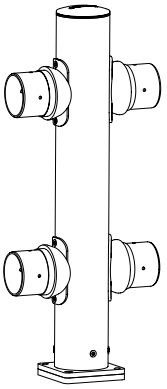

H1 x4
H2 x16

60''H Posts

End Post
670887

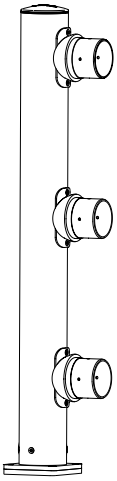

H1 x4
H2 x12

Corner Post
670888

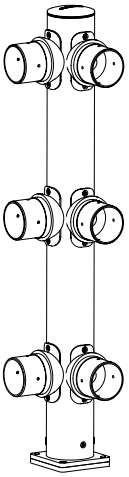

H1 x4
H2 x24

Middle Post
670889

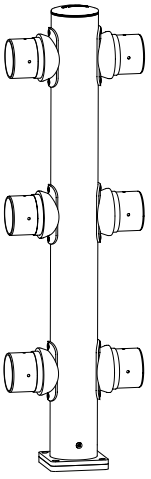

H1 x4
H2 x24

Patent Pending

Installation

Step.1

Place first post in desired position. Using the base as a template, mark the (4) holes for your first post.
Note: Use chalk line tool to align additional posts

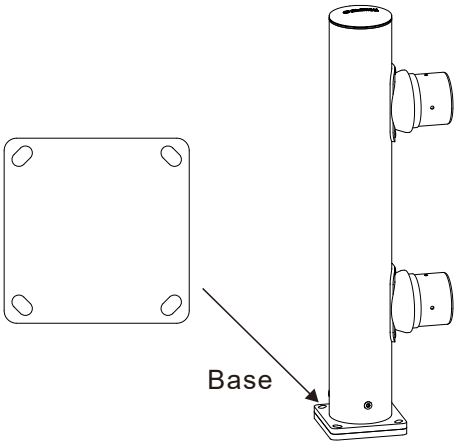

Step. 2

Drill holes for first post using hammer drill with 1/2”drill bit for concrete flooring.

- Drill 4-3/4" deep into ground
- Vacuum out debris

Use impact driver with 3/4" hex socket for installation of H1 concrete bolts

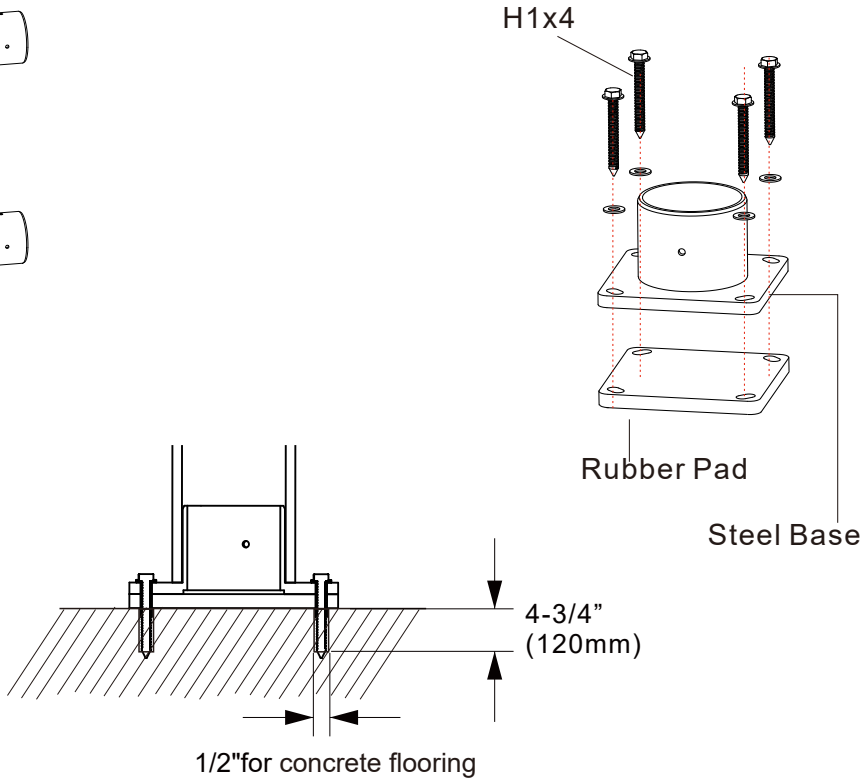

Step. 3

Insert Rails so that the holes align to those on the collar. Install H2 bolts using electric drill and 5/16" hex head bit (shown on 42" End Post)

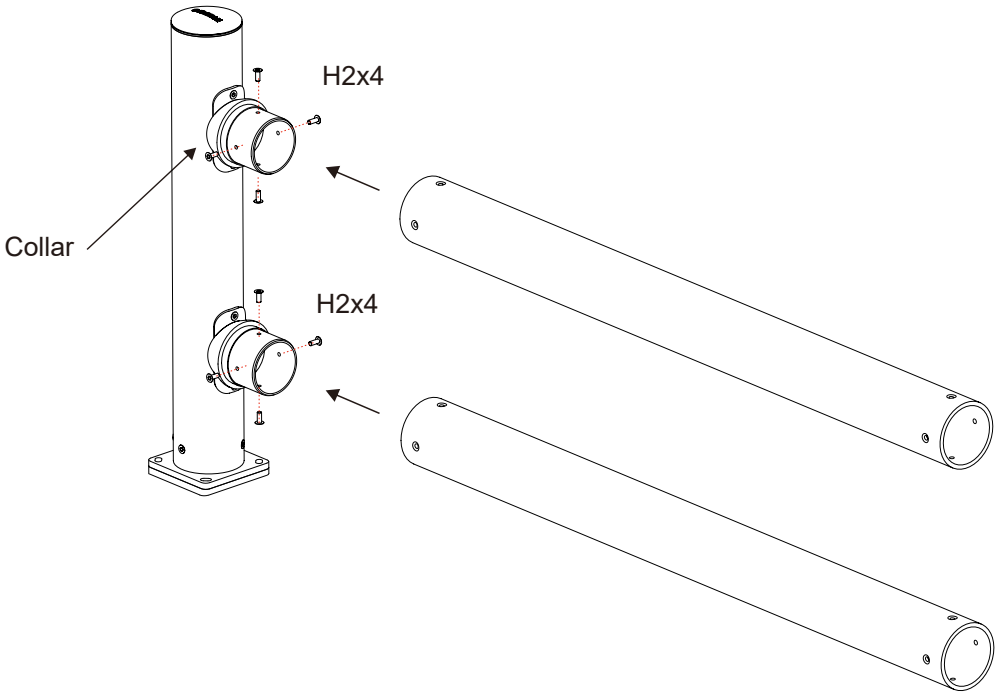

Patent Pending

Step. 4

Align next post. (shown with middle post) Insert rails into post.
Use Hex Socket Head Screws(H2) to connect the rails and post.

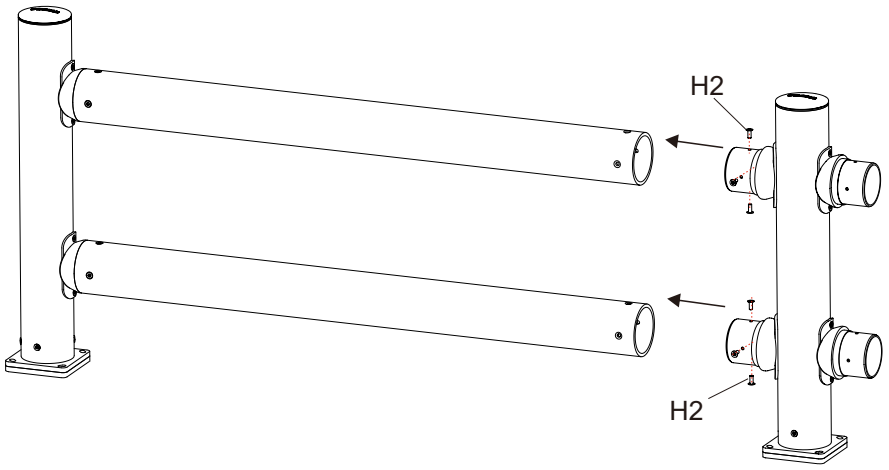

Step. 5

Ensure post is in position and in line and then drill anchor holes, Minimum 4-3/4” hole depth (steps 1-2). Fasten post to floor with Concrete Bolts and Washers (H1).

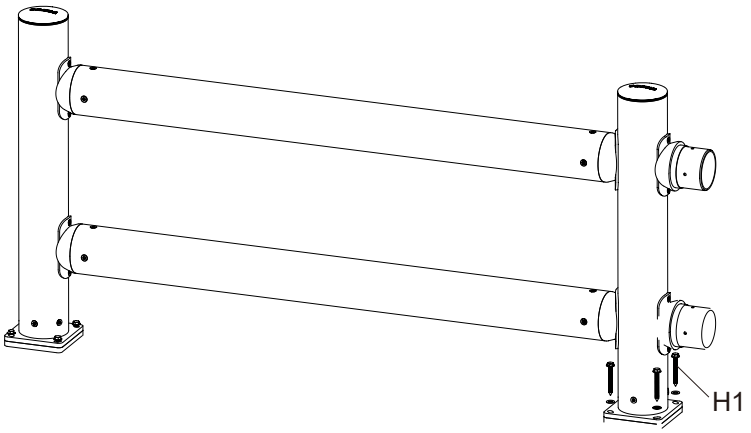

Patent Pending

Step. 6

Continue with steps 4-5 until final post is fully installed.

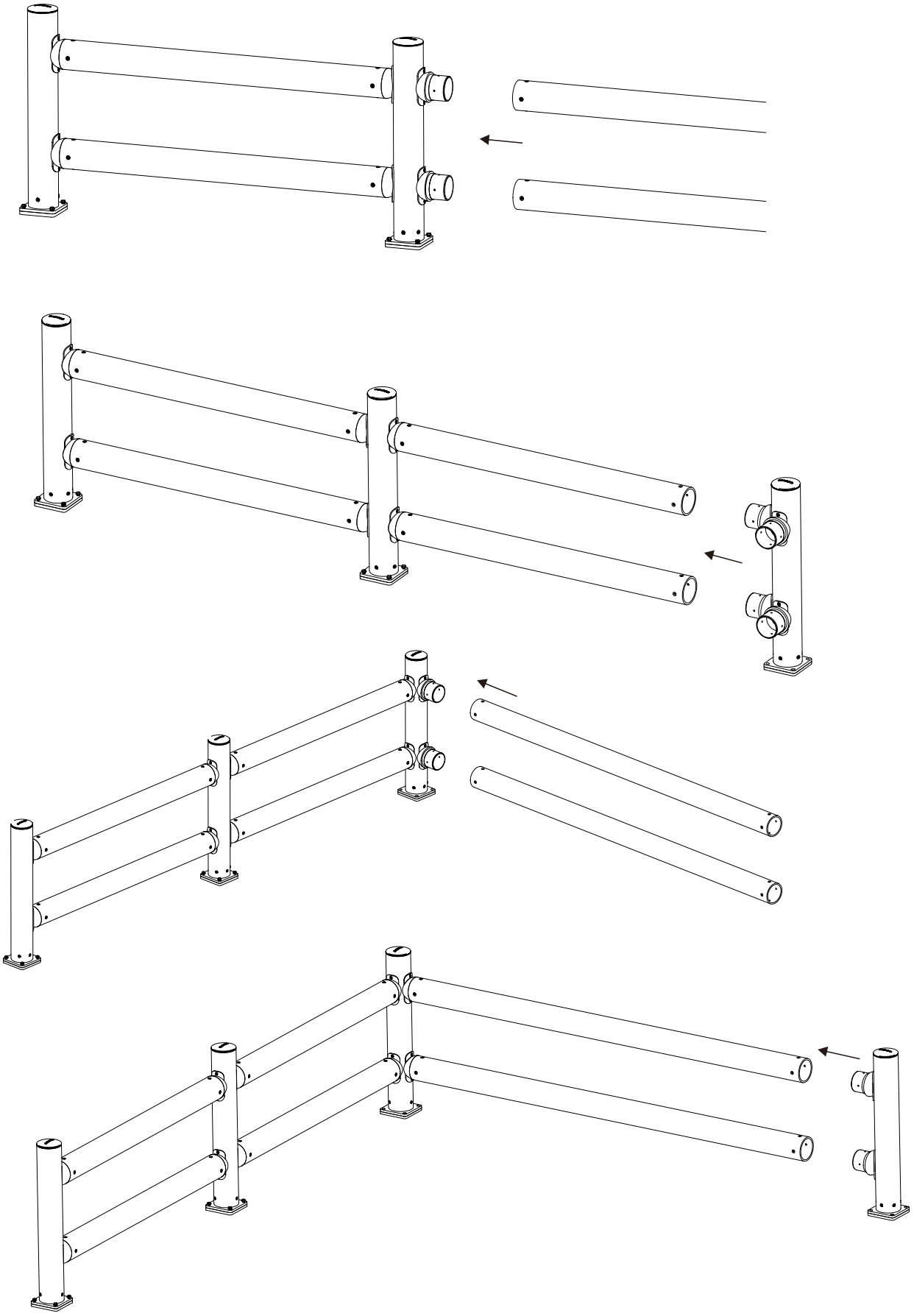

Patent Pending