User's manual	Manual del usuario	Manuel de l'utilisateur
Customer Service US: 1-800-645-2986	Servicio de atenci ó n al Cliente M é xico: 01.800.681.6940	Service à la client è le Canada: 888-645-2986

OPP Medical cart

Model 290898

⚠ WARNING ⚠

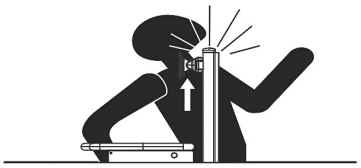

IMPACT HAZARD!

Moving parts can crush and cut. Raise work surface before removing the monitor. Failure to heed this warning may result in serious personal injury or property damage!

⚠ WARNING ⚠

TIPPING HAZARD!



For carts without an internal power system, a CPU should be mounted to the cart before displays are mounted. DO NOT remove CPU while displays are mounted because personal injury or equipment damage may occur.



⚠ WARNING ⚠

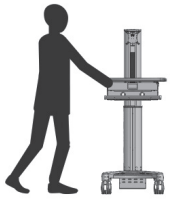

TO MOVE CART:

1. Lower the display to the lowest position.
2. Disconnect any power cords.
3. Stow cords to keep out of the way.
4. Unlock casters and pivot to the direction of travel.
5. Push the cart from the sides using the hand holds.

⚠ WARNING ⚠

This component is under high tension, and can cause injury or damage if release bolt Is removed before assembly. This release bolt should only be removed after assembly is complete. Please refer to manual.



Mobile Sit and Stand Workstation

⚠ WARNING ⚠

This warning alerts you to the possibilities of serious injury or death if you do not follow the following instructions. It is the installer's responsibility to make sure all components are properly assembled and installed using the instructions provided. Severe personal injury and property damage can result from improper installation or assembly.

⚠ WARNING ⚠

It is the installer's responsibility to make sure the combined weight of all components does not exceed weight capacity of 50Kg (110 lbs). Exceeding weight capacities can result in severe personal injury or damage to equipment.

⚠ WARNING ⚠

Attachment holes may be damaged if a powered screwdriver is used to insert button head cap screws. Screws should first be inserted and turned by hand with hexagon key or with screwdriver before using a powered screwdriver to complete the attachment.

⚠ WARNING ⚠

Do not load mobile workstation above maximum weight capacities.
Do not mount a display above recommended monitor sizes.
Do not allow children to climb on top of mobile workstation.
Do not move mobile computer cart on sloping surface.

Read the following warning before installing:

- Verify all parts are included. Do not install if the products or hardware are damaged.
- This product contains moving parts. Assemble with caution.
- This product contains small items. Keep these items away from children.
- Do not exceed the maximum weight capacity for this product. Exceeding the weight capacity can result in serious personal injury or damage to equipment. Maximum weight capacity is 9kg (19.8 lbs.) for the monitor bracket, and 50kg (110 lbs.) for the work surface platform.

CONTENTS

①  Mouse Holder Qty. (1)	②  Lift Pole Qty. (1)	③  Base Qty. (1)
④  Keyboard Tray Slot Qty. (1)	⑤  Work Surface Qty. (1)	

⑥  Round Head Hex Screw M6 x 15mm Qty. (8)	⑦  Washer Qty. (4)	⑧  Round Head Hex Screw M5 x 10mm Qty. (2)	⑨  Phillips Screw M6 x 12mm Qty. (4)
⑩  Hex Allen Wrench 4 mm Qty. (1)	⑪  Hex Allen Wrench 5 mm Qty. (1)	⑫ 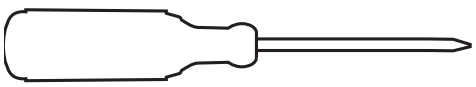 Magnetic Screwdriver	

Installation

Attaching the Lift Pole

Note: This step may require assistance.

1. Do not remove the gas spring tension screw below the label before completing the assembly. Put lift pole (2) on the base (3).

Note: Install four round head hex screws M6 x15mm (6) each with a washer (7) through mounting holes in the base and into lift pole with a 5 mm allen wrench (11) so the lift pole is firmly attached.

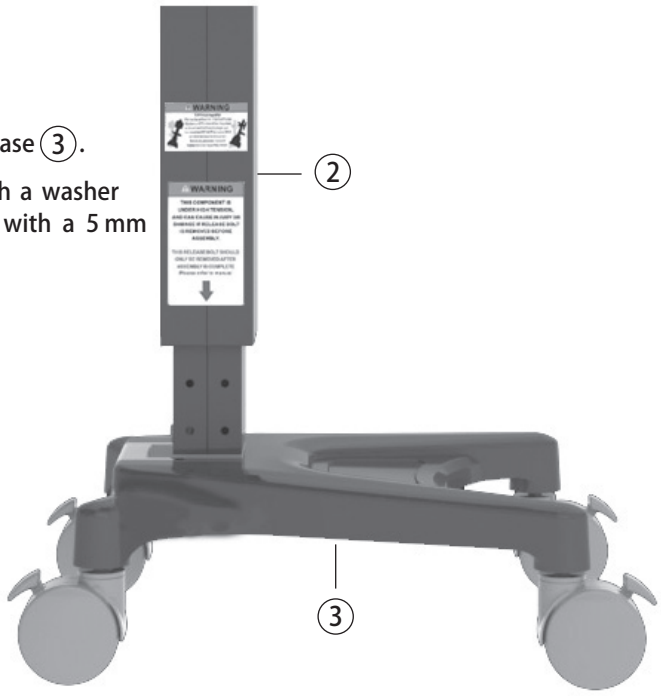

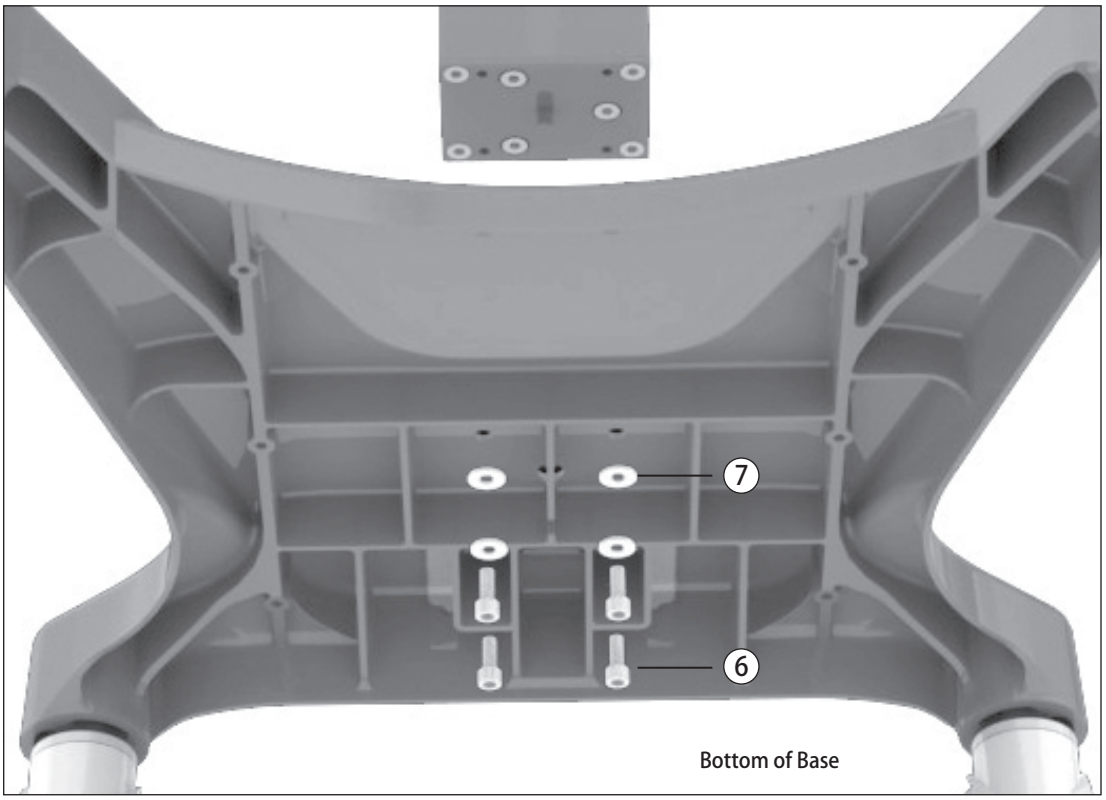

Bottom of Base

Attaching Keyboard Tray Slot

2. Put keyboard tray slot (4) on the lift pole. Install four round head hex screws M6 x15mm (6) through mounting holes on the keyboard tray slot and finally into lift pole with a 5 mm allen wrench (11) so that the keyboard tray slot is firmly attached to the lift pole. No washers are required fo

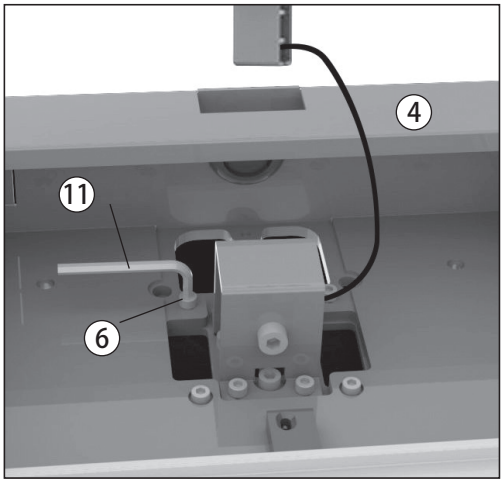



Lever Installation

3. CAUTION! Do not remove the gas spring tension retainer before assembling the lever. Put the lever through the hole on the side of keyboard tray slot (See Figure A). Turn the lever by facing up (See Figure B). Once the lever is in position, tighten two round head hex screws M5 x10mm (8) with a 4mm allen wrench (10), so that the lever is firmly secured to the keyboard tray slot (Figure C).

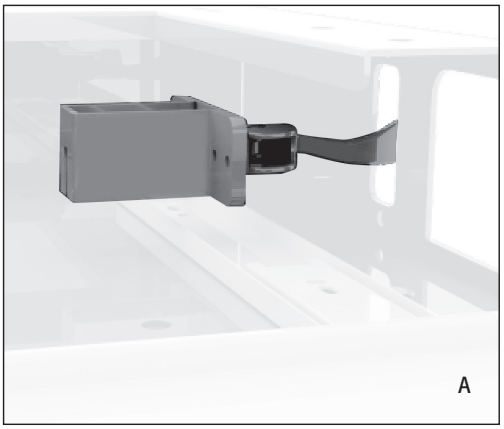

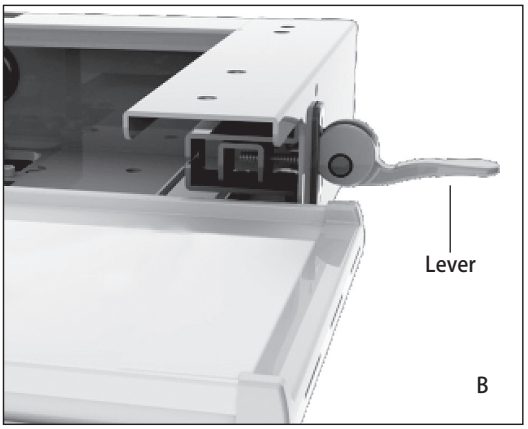

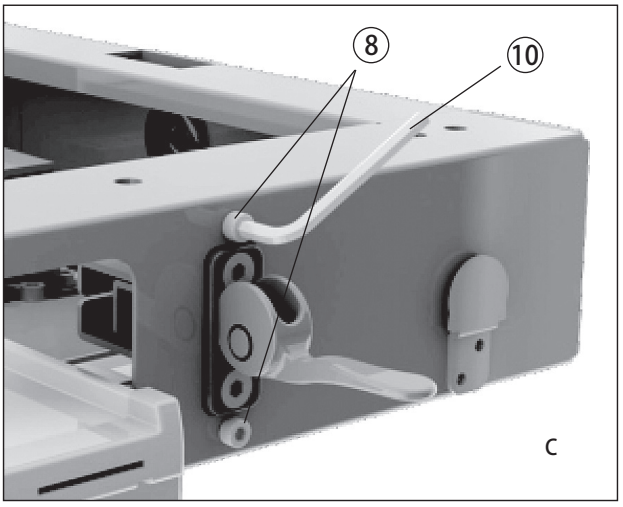

Mouse Holder Installation

4. Insert mouse holder (1) on the side of keyboard tray slot from top to bottom.

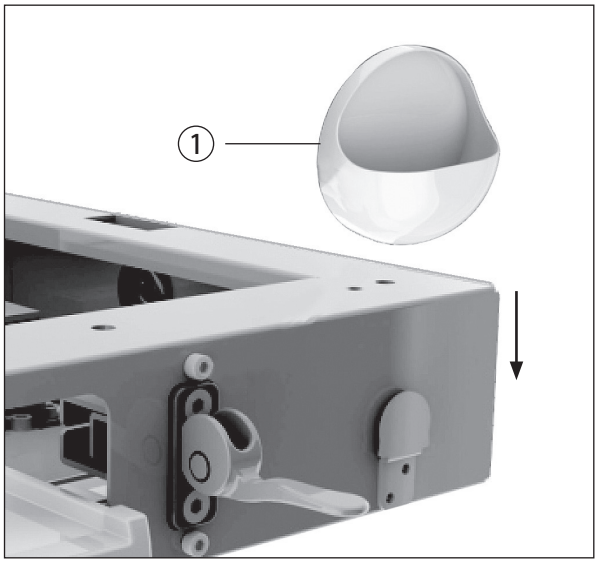



Attaching Work Surface

5. Put the work surface (5) over the keyboard tray slot. Install four phillips screws M6 x 12mm (9) through mounting holes on the keyboard tray slot and finally into work surface using long shaft phillips magnetic screwdriver (12) until it is firmly attached to keyboard tray slot.

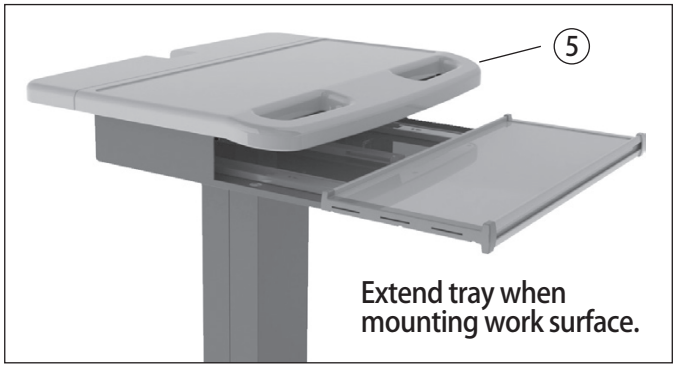

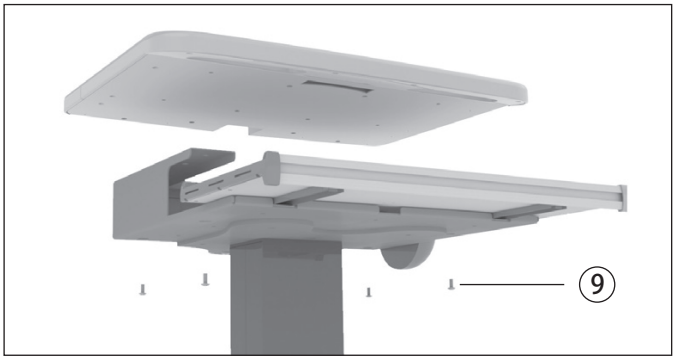

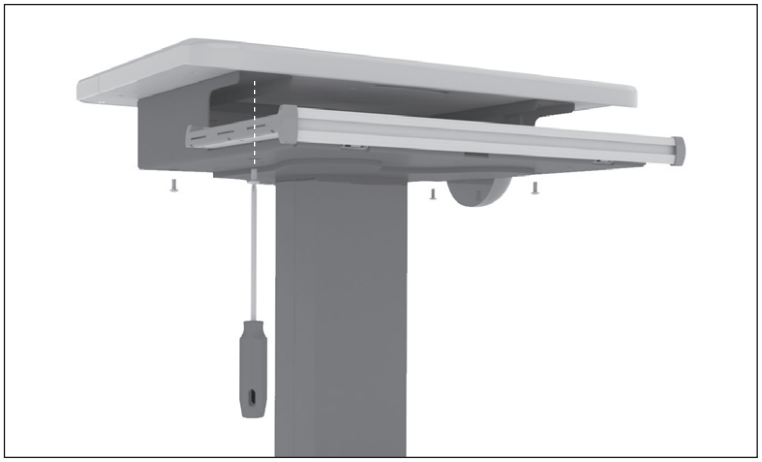



After final assembly, remove the gas spring tension retaining screws as shown in Fig. (A) and (B) below.
Pull the lever up to change the work surface to desired height.

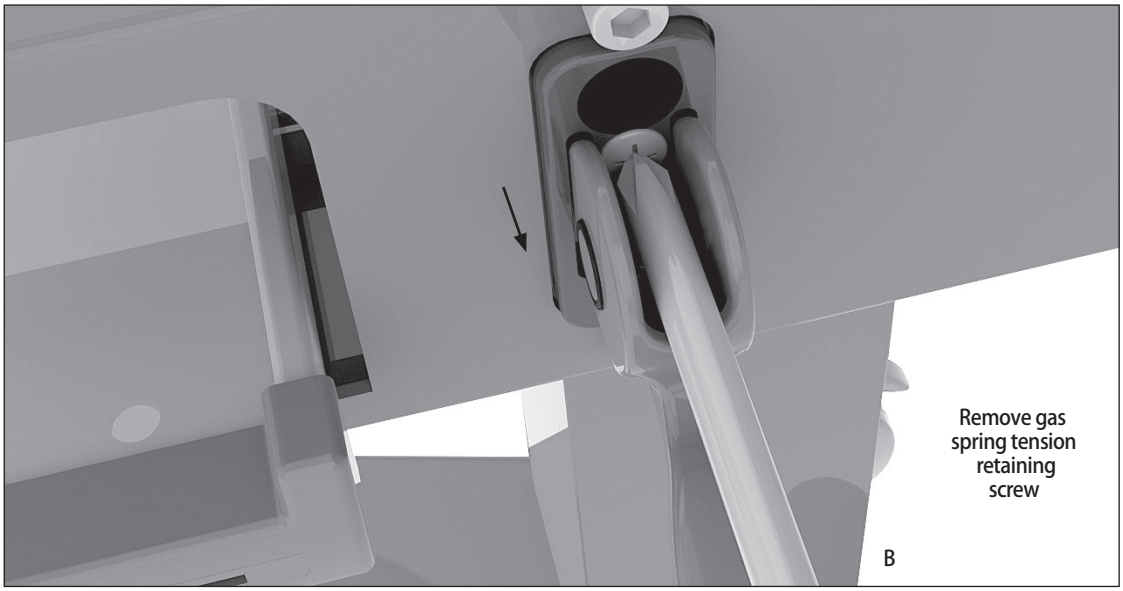

Under Work Surface

Mobile Sit and Stand Workstation

Specifications

- Model: 290898
- Work surface height: 892mm-1292mm (35"- 51")
- Work surface dimensions: 560mm (L) x 430mm (W) (22" x 17")
- Keyboard tray dimensions: 450mm (L) x 200mm (W) (18" x 8")
- Weight capacity: up to: 9kg (19.8 lbs.)
- Pedal locking casters: 101mm (4") diameter

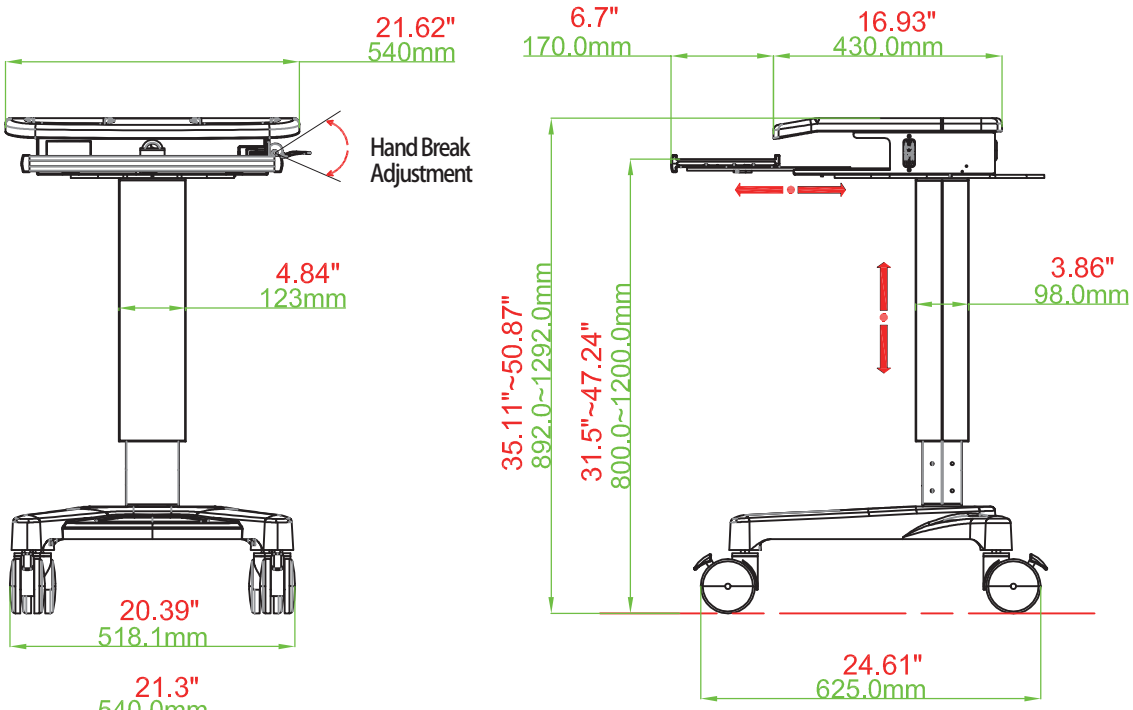

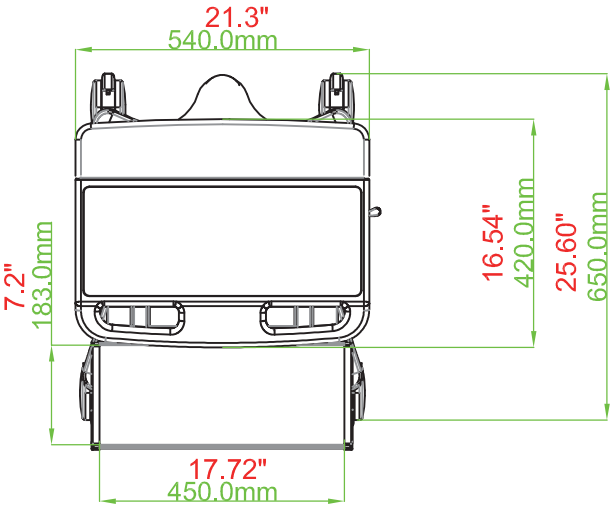

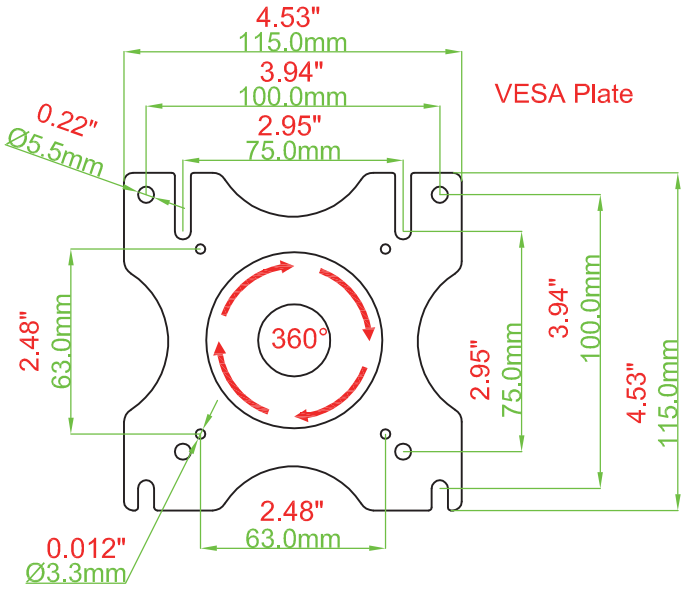

FEATURES AND COMPONENTS

