OPERATION AND MAINTENANCE.

CAREFULLY READ THIS INSTRUCTION MANUAL BEFORE INSTALLING AND USING

PLEASE KEEP THIS INSTRUCTION MANUAL FOR FUTURE REFERENCE FOR PRODUCT

Do not place or install the product directly under the sun or long exposure of sunlight.
Do not place any catoptric items such as mirror to the opposite wall of the inductive window.
Do not use contaminated water with the device.
Do not soak the device in water, this will causes permanent damage.

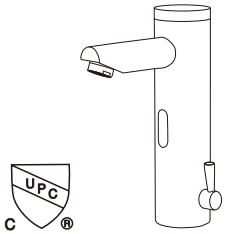

Single Hole Electrical Washbasin Faucet

Brass Construction
UL American Plug
Easy Installation

DIAGRAM AND PARTS LIST

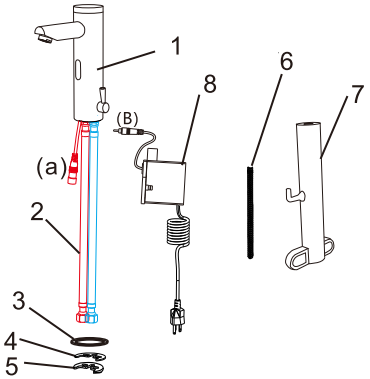

1.Sensor faucet body
2.Braided hose
3.O#Rubber gasket
4.C#Rubber gasket
5.Gasket
6.Fixed threaded rod
7.Fixed nut
8.Control box

RECOMMENDED TOOLS

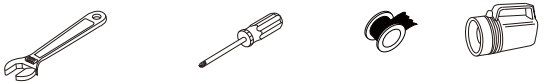

Adjustable wrench | Philips Screwdriver | Pipa tape | Flashlight

Product Description & Information

Features:

- Water saving control - sensor responds to object approach in 0.5s and stops once object leave sensor range.
- Sanitation - automatic sensor keeps hand free of touching faucet
- Intelligent sensor - Faucet will automatically stop if water flows over 1 minute. Sensor resets in 10s. Faucet stops working if water supply or power is out to minimize water leakage.
- Low power consumption -4AA batteries can be consumed for 2 years 300 cycles a day.
- Stable & Reliable - all faucets are manufacture under harsh moisture and humidity test.

Specification:

- Power Voltage: AC110 (60Hz) and Dc (4 x AA batteries)
- Water pressure: 0.05 - 0.6 MPa
- Water Temperature: 0 - 80ºC
- Ambient temperature: 0.1-45°C
- Detection range: 12-18cm

(Manufacturer set,detection range does not need to be adjusted.
If you need to adjust, please contact the merchant.)

ASSEMBLY INSTRUCTIONS

[1]

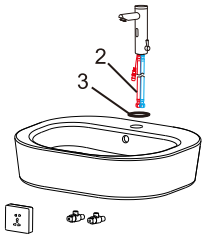

1.Place O#rubber gasket(3) below faucet. Put the hoses(2) into basin sink hole.

[2]

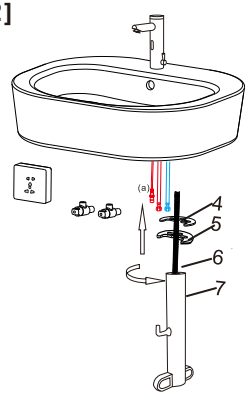

2. Place rubber gaskets (4 & 5) onto fixed threaded rod(6) . Use fixed nut (7) to screw it.

[3]

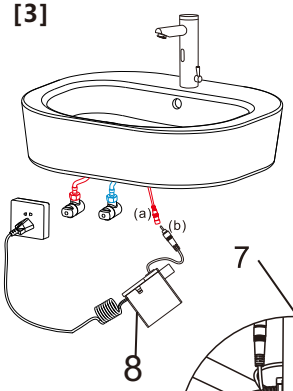

3. Connect the flexible hose to water supply valve.

Connect electric wire A-B ;

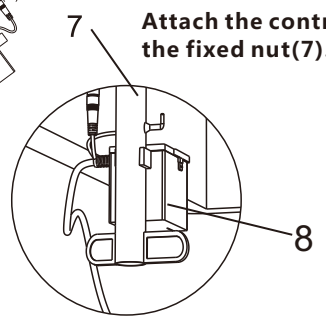

Attach the control box(8) on the fixed nut(7).

• Installation of battery

Install 4 AA batteries into the batteries compartment.

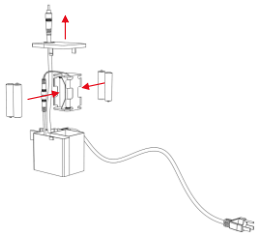

Simple Troubleshooting

Phenomenon	Reason	Solution
No water comes out	Batteries run out	Replace new batteries
	electricity cut off	waiting for resume
	power failure	check power connection
	water cut off	waiting for resume
	filter blocked	clean the filter
	washing more than 1 min.	use it 10 sec later
Can't stop flowing	Batteries run out	Replace new batteries
	electricity cut off	waiting for resume
	power failure	check power connection
	Obstacle blocked	remove the obstable
Shut off faucet but low water flows	low water pressure	reset water pressure
	filter is too dirty	clean the filter
water rate is too small	inlet hose too small	change a standard size hose
	triangular valve didn't open	Open the valve at full
	plow water ressure	reset water pressure
Batteries short time limited	used non-alkaline or poor quality battery	replace new batteries