NEXEL INDUSTRIES INC.

COMMERCIAL

Ice Machine
USER MANUAL



Model 243318

Ice Machine, Air Cooled,
420 Lb. Production/24 Hrs. With Ice Dispenser Bin

Intertek Intertek

Read this manual thoroughly prior to installation and operation.

Keep these instructions in a safe location for future reference.

For questions, contact NEXEL® Customer Service at 1-800-245-6682

or visit www.nexelwire.com

Safety Information

WARNING:
Pay careful attention to the following warning labels on the ice maker.

HAZARDOUS VOLTAGE:



The label indicates a hazardous voltage. There is a risk of electric shock.

FIRE HAZARD:



The label indicates a flammable foaming agent, “Cyclopentane” used. There is a risk of fire.

HAZARDOUS VOLTAGE:

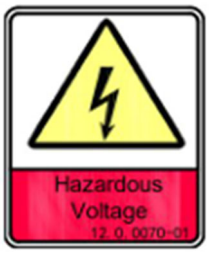

The label indicates a hazardous voltage. There is a risk of electric shock.

FIRE HAZARD:



The label indicates a flammable refrigerant, “R290” used. There is a risk of fire.

ROTATING COMPONENTS WARNING:

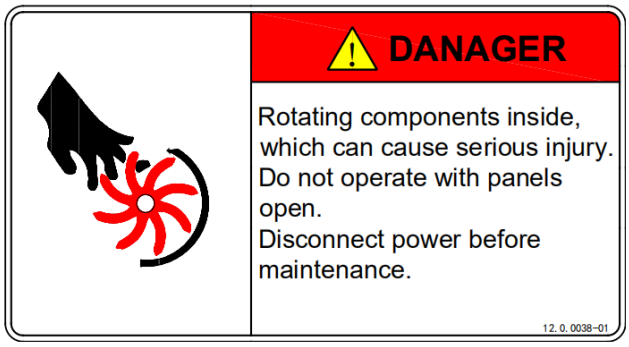

The label indicates rotating components inside. There is a risk of serious mechanical injury.

Safety Information (continued)

DO NOT use this product in outdoor environments.

DO NOT allow children or those with physical or mental imparities play or operate this machine.

- The installation, repair, or maintenance of this ice machine must be carried out by professional and qualified personnel, or electric shock, fire, or personal injury may cause by incorrect operation.
- After the ice machine is delivered, please keep the machine sit upright for 24 hours to have the lubricant be fully precipitated before startup; otherwise, the compressor may be damaged.
- DO NOT invert the machine or lay it horizontally. When handling, keep the cabinet upright, with the inclination not exceeding 45 degrees.
- DO NOT place the ice machine in wet areas or where water can easily be splashed onto the unit.
- The grounding of this ice machine cannot be connected to gas pipe, water pipe, telephone line or lightning rods, etc.
- To avoid serious injury, or mechanical issues, DO NOT insert fingers or any objects into the ventilation or exhaust ports of this machine.
- DO NOT store volatile or flammable substances in this ice machine, or it may result in explosion or fire.
- DO NOT store objects, or freeze any food in the ice bin. Keep the ice scoop clean.
- The ice machine must be placed on the floor sufficient to supports its weight. Insufficient base may cause the equipment fall over and cause injury.
- There should be sufficient ventilation space around the ice machine. Keep good ventilation.
- Only the power supply specified on the machine nameplate can be used with this ice machine.
- DO NOT connect the ice machine to hot water.
- Socket for this ice maker must be reliably grounded and with leakage protection.
- The ice machine must be disconnected from power before manual cleaning, repairing and maintenance.
- Before cleaning, repairing and maintenance, the remaining ice in the ice bin should be to avoid contamination.
- DO NOT splash water directly onto the surface of the ice machine during the cleaning process; otherwise it may cause a short circuit, leakage or other faults.
- Flammable foaming agent is used during the foaming process. The ice maker should be disposed of and recycled by qualified personnel and institutions.
- The ice machine should be properly managed to ensure that children will not play with the machine.
- If there are any malfunctions, turn off the power to the unit and contact professional personnel for repair.



WARNING: This ice maker contains a flammable refrigerant R290/R404a:

- DANGER – RISK OF FIRE OR EXPLOSION. FLAMMABLE REFRIGERANT USED. DO NOT USE MECHANICAL DEVICES TO DEFROST REFRIGERATOR. DO NOT PUNCTURE REFRIGERANT TUBING.
- DANGER – RISK OF FIRE OR EXPLOSION. FLAMMABLE REFRIGERANT USED. TO BE REPAIRED ONLY BY TRAINED SERVICE PERSONNEL. DO NOT PUNCTURE REFRIGERANT TUBING.
- CAUTION – RISK OF FIRE OR EXPLOSION FLAMMABLE REFRIGERANT USED. CONSULT REPAIR MANUAL/ OWNER'S GUIDE BEFORE ATTEMPTING TO SERVICE THIS PRODUCT. ALL SAFETY PRECAUTIONS MUST BE FOLLOWED.
- CAUTION – RISK OF FIRE OR EXPLOSION. DISPOSE OF PROPERLY IN ACCORDANCE WITH FEDERAL OR LOCAL REGULATIONS. FLAMMABLE REFRIGERANT USED.
- CAUTION – RISK OF FIRE OR EXPLOSION DUE TO PUNCTURE OF REFRIGERANT TUBING; FOLLOW HANDLING INSTRUCTIONS CAREFULLY. FLAMMABLE

General

The ice machine is fully automatic. With proper installation and connection to potable water and power source, the ice making process will automatically operate. When the bin is completely filled with ice, the machine will automatically stop.

Installation

Location for Installation

The ice machine must be installed in a proper location meeting the following conditions:

- Indoor, not more than 6,500 ft. above sea level;
- Ambient temperature: 41- 104°F (5-40°C); Power supply: the rated voltage indicated on the machine nameplate ±6%;
- Water source: potable water, with water pressure from 1.3 Bar to 5.5 Bar; water temperature: 41-95°F (5-35°C);
- Keep ice machine away from the heat sources. DO NOT use in extreme high or low temperature environments. Avoid direct sunlight.
- Leave sufficient ventilation space around the ice machine and keep good ventilation. The distance from the ice maker to the wall must be no less than 12” from the front, 8” from the rear, and 6” from each side.
- The ice machine must be placed on a floor sufficient to support its weight;
- Socket for the ice maker must be reliably grounded and with leakage protection;
- Proper floor drainage must be provided near the installation location of the ice machine.

Specifications:

Model: 243318

Voltage:	115/60 (V/Hz)
CP243318A Machine Head Power:	919 W
CP243317A Ice Dispenser Bin Power:	210W
Ice Dispenser Bin Capacity:	130lbs
Output:	420 lbs/24 hr.
Refrigerant:	R290
Cooling:	Air Cooled
Material:	Food Grade PE + SUS304 Stainless Steel
Certification:	DOE, Energy Star, ETL/cETL, ETL Sanitation
Dimensions:	22.05"W x 33.66"D x 75.71"H
Weight:	284.40 lbs.
Warranty:	3 Year

Schematic Diagram of Installation:

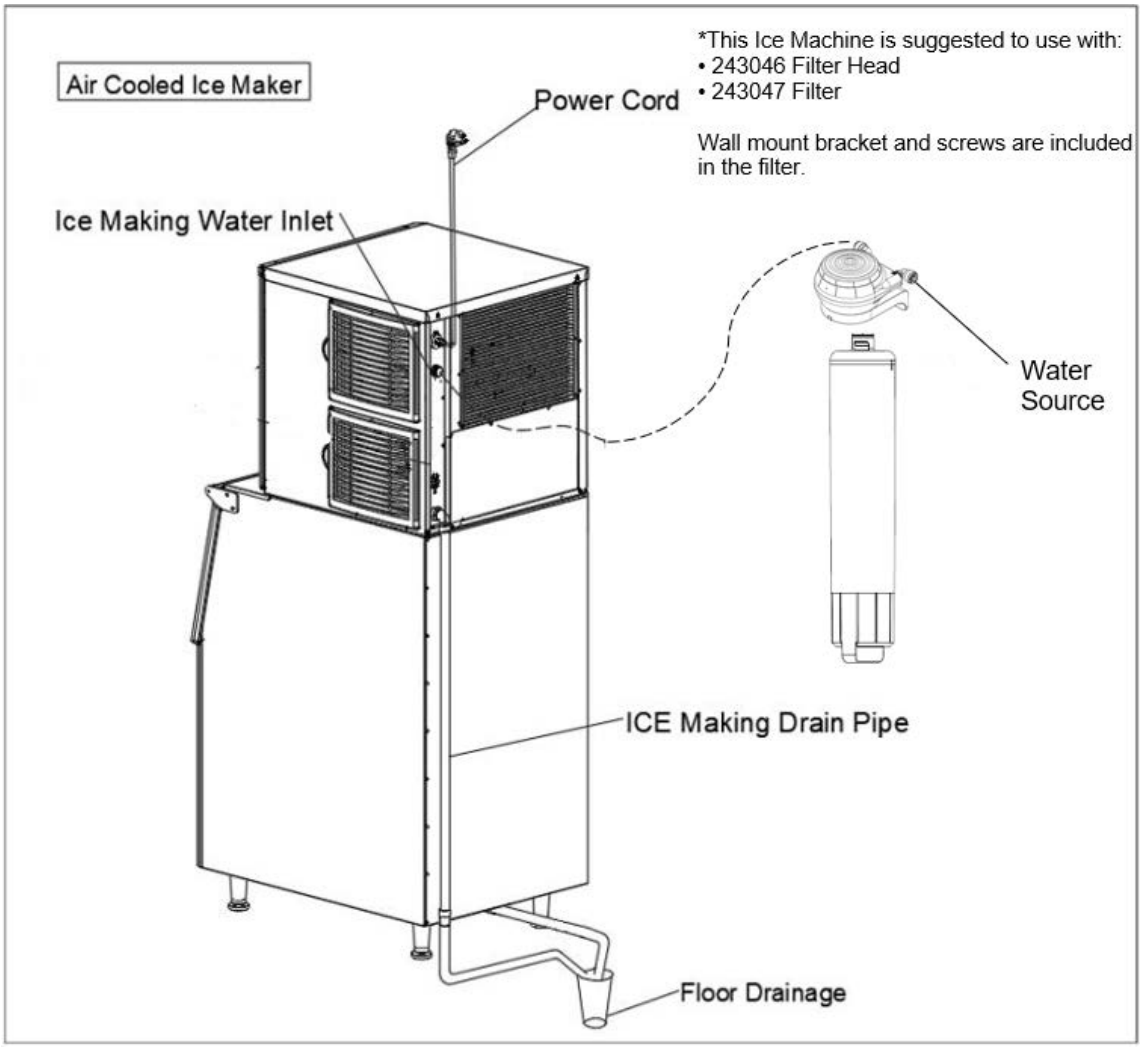

Water Pipe and Drain Accessories:

Ref. No	Parts Name	Internal dia. (inches)	External dia. (inches)	Length(ft.)	Color	Picture
1	Inlet Water Pipe	2/8	3/8	6-1/2 ft.	White	
		2/8	3/8	2 ft.	White	
2	Drain Pipe for Modular Ice Machine Head	5/8	6/8	5 ft.	Grey	
3	Drain Pipe for Ice Dispenser Bin of Modular Ice Machine	5/8	7/8	5 ft.	Grey	

Installation of Ice Dispenser

1. Precautions for unpacking
   - Check the model before unpacking.
   - Prior to unpacking, check the outer package.
   - After unpacking, check whether the machine is in good condition and whether the accessories are complete.
2. Entry of ice cube and external environment requirements
   - Dimensional criteria of the ice dispenser for ice cube: 22mm*22mm*22mm ice cube
   - It is recommended to use our company's ice maker.
   - The ice dispenser is for indoor use only.
   - Surrounding spacing of the ice dispenser: keep an appropriate distance around, as shown below:

Part	Spacing, cm
Side	1
Back	10
Front	30

   - Keep the ice dispenser horizontal in all directions after installation (It can be adjusted through the adjustable foot at the bottom of the machine).

3. Installation of drain pipe
   - For the layout of water supply and drainage pipes, refer to the table below:

Inside diameter of drain pipe (mm)
>15.8 (5/8”)
Fall per meter: >3cm

Please use our company’s supporting drainage accessories.

- **The drain pipe must be installed according to the following principles (as shown below).**
  Any point in the middle of the drain pipe must not be higher than the drain port of the ice dispenser. Any point in the middle of the drain pipe must not be higher than the previous point.
- Installation diagram (for reference only)

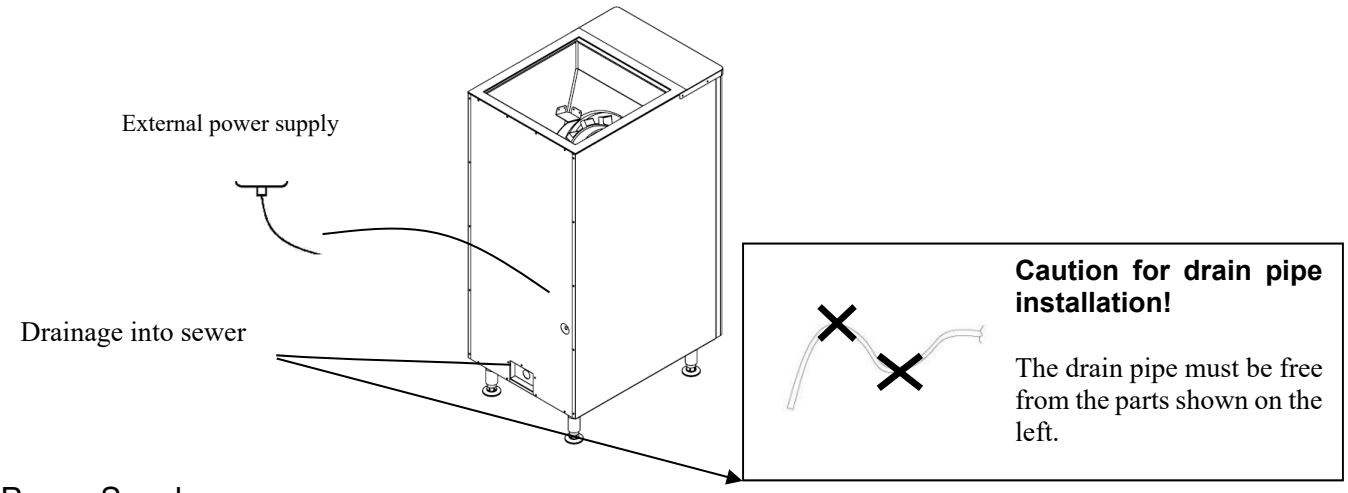

4. Power Supply
   - The power voltage, frequency and capacity applied should be consistent with those on the nameplate.
   - The ground terminal of the power supply, socket or plug must be connected and grounded reliably! ⚠
   - The power supply and cable used need to comply with national or local standards.
   - The power voltage fluctuation must not exceed the rated voltage by ± 10%.

Use of Ice Dispenser

1. Use of supporting ice maker (if required)
   - For details, refer to our product catalog or consult our sales staff.
2. Check before use
   - Check whether all accessories have been taken out of the ice dispenser!
   - Check whether the ice dispenser has been adjusted properly!
   - Check whether the drain pipe has been connected correctly!
   - Check whether the size of ice cubes is appropriate (standard size of ice cube : 22mm *

22mm * 22mm)!

- Check whether the plug is reliably connected to the power supply!
- **Check whether the ground terminal is reliably connected to the external qualified electrical ground terminal!**
- Check whether the power voltage and frequency are the same as those in the nameplate!

3. Operation and Status Description
   - Ice discharge:
     As shown on the right, put your hand at the lower end of the ice outlet, and gently push the ice outlet forward. While the lower end of the ice outlet is tilted forward, trigger the internal switch to run the reducer motor, thus driving the ice turntable to deliver ice to be in front of the ice outlet channel. The ice cube will slide to the lower end of the ice outlet and fall into the ice container due to the gravity, until you remove the hand. Then the lower end of the ice outlet will be reset, the reducer motor will stop running, and no ice will be delivered. Thus, ice is available.

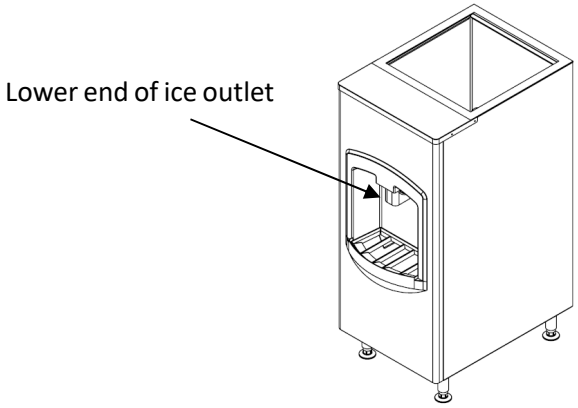

   - Ice stirring against freezing
     No matter whether ice is required, this machine will automatically run for ten seconds every four hours cyclically to prevent internal ice cubes from freezing into large pieces.

Installation of Machine Head

⚠ **NOTE: This machine is to be used with inlet water filter (not included). The filter will keep impurities from the water used as the machine is running. Generally, filters should be replaced every month to 3 months depending on usage.**

⚠ **NOTE: Filter not included.**

⚠ **NOTE: The filter flow direction should be correctly installed as per the direction marker on the filter head cover or filter.**

1. Upon delivery, check if the ice machine and all accessories are in good condition; check the machine model and the machine nameplate.
2. Clean the ice bin and all areas inside with a sponge soaked in warm water. Then wash and try it with potable water.
3. Place the ice machine in the operation area; ensure that the machine is placed on a leveled floor. So as to ensure the water flows evenly on the evaporator.
4. For this air-cooled unit, good ventilation is required. Allow no less than 12” from the front, 8” from the rear, and 6” from each side of the unit to the wall.
5. The bottom of the ice machine is equipped with adjustable legs for level adjustment and floor cleaning.
6. Connect the machine's inlet water filter (not included) and water pipe referring to the schematic diagram of installation; if the installation site is already equipped with a drinking water system, a water filter may not be required.
7. Connect the machine to the water supply using the 3/8" inlet pipe supplied with the machine. It is recommended to install a water valve (not supplied with this machine) on the water supply line.
8. Make sure the drain pipe is not blocked with foreign debris, and then connect it to the drain connection. It is recommended that the drain pipe be connected to an open drainage port.
9. Any joint in the drain pipe must not be higher than the machine drainage port; and cannot be higher than the previous joint.
10. Confirm the power requirements stated in the machine nameplate; ensure that the power supply meets the requirements.
11. A circuit breaker or switch with leakage protector and reliably grounding is required.
12. Turn off the switch on the power line and connect the machine to the power source.

Startup and Operation

1. Before you start up the machine, check and confirm:
   - That the packaging tape inside the ice machine has been removed;
   - All accessories and items in the ice bin have removed;
   - The ice machine has been adjusted to a leveled state;
   - The water pipe has been connected and the water valve is open;
   - The plug has been connected to the power supply and the power switch is off;
   - The ambient temperature, water temperature, and pressure of the water supply meet the above requirements.
2. Start up: turn on the power switch. After the machine is powered-on, it will automatically being to make ice.
3. For normal operation, check and confirm:
   - There is water in the water trough and no overflow occurs;
     The pump is working properly and water is flowing evenly on the evaporator;
   - The compressor is running normally, the temperature of the evaporator and the ice making water is gradually decreasing;
   - For air cooled machine, check that the
   - Fan is running normally, and there is stable air flow in the inlet and outlet of the ice machine;
   - The ice machine has no abnormal noise;
     The ice machine has no abnormal vibration;
   - It takes about 10 to 20 minutes to make one batch of ice, depending on the ambient temperature and the temperature of the water. The higher the temperature is, the longer the ice making will take.

Operation Instruction

- **Startup:** after proper installation, connect the water source and turn on the power

  ⚠ **Note: If the ice machine will not be used for a long time, disconnect the power and water source.**

- **Self-Check:** Once powered on for the first time, the ice maker will do a selfcheck and pump out remaining water.
- **Preparing**: After the ice machine is energized, the inlet valve will open and water will enter the machine.
- **Ice Making**: After pre-cooling for approximately 30 seconds, the water pump will start, and water will flow through the evaporator smoothly and evenly, the ice cubes are gradually formed in the ice cube tray.
- **Ice Harvest (Drop)**: After the ice making process, the water pump will turn off, and the defrost valve will turn on, allowing hot gas to enter the evaporator. The ice cubes slide from the evaporator into the ice bin.

  ⛔ **WARNING: Keep hands away from ice bin during the harvest process, to prevent injury or contamination.**

- **Shutdown:** The ice maker will stop working when you click the “on/off” button on the panel during running process.
- **Full Bin Auto-Stop:** Once the ice bin is filled to a predetermined height, the sliding board cannot reset and the ice maker will automatically stop . Once ice has been removed, the ice maker will turn back within a few seconds.

Instruction of Control Panel

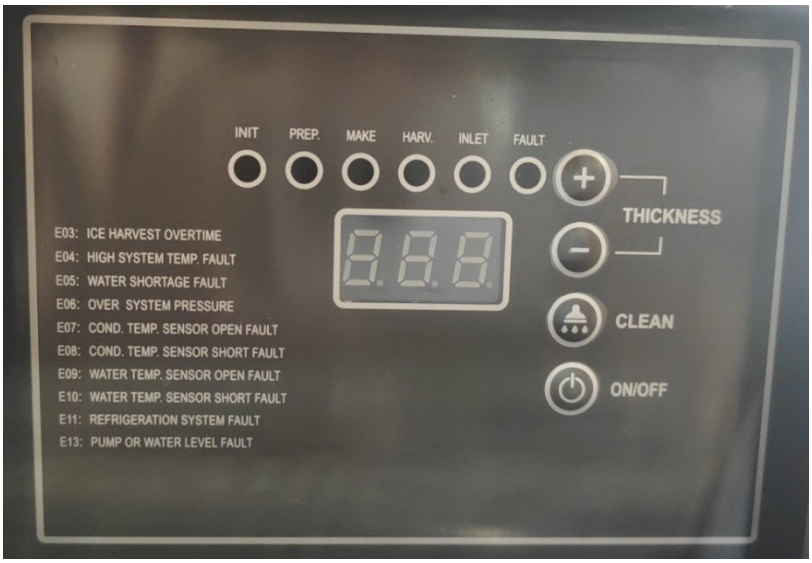

1. LED Display:
   - ✓ Self-check: Display “ini” code.
   - ✓ Preparing: Counting seconds positively.
   - ✓ Ice making: Counting seconds positively prior the water reaching 0 degree C. Counting seconds down to 0 s after.
   - ✓ Ice Harvest: Counting seconds positively.
   - ✓ Clean: Display “CLE” during cleaning and sterilizing;Display “rin” during rinsing.
2. LED Lamps: Lights on during the related process.
3. Ice cube thickness adjustment: During the ice making process, if you are not satisfied with the ice thickness, press the Ice cube “–” button for 3 seconds, then click the button “+” or “-” on the panel to adjust the thickness of ice cube.

⚠Note: By clicking the “+” or “-“ button one time, the ice making time is extended or shortened by 1.5 minutes.

4. Cleaning: During the normal operation, hold the cleaning button for 3 seconds to enter the cleaning process. During the entire cleaning process, cleaning agents and disinfectants need to be put into the water trough. When the clean process is finished, the ice maker will go to ice making process.
5. Switch: When the device is powered, click the “Switch” button to switch OFF/ON the device.
6. Voice function (only for machines with voice function): The machine with voice announcement prompts will provide voice prompts for related operations.
7. Please open and close the storage bin door gently. Do not slam the door. After taken the ice cubes, please close the door.
8. If the ice maker is not in use for a long time, it should be energized and run for 2 to 4 hours every 2 months.

Other special protection – shutdown

- If the ice machine has not detected ice cube falling off in three cycles, it will shut down for safety protection. The ice maker needs to be checked.
  The ice machine detects that the ambient temperature is too high and will stop for safety protection.
- If the water-cooled ice machine detects an abnormity in water supply, it will stop for safety protection.
- The fault code and its comments are displayed as follows:

Code	Comments	Machine action
E03	Ice harvest overtime	Protective shutdown
E04	High temperature	Protective shutdown
E05	Water shortage	Protective shutdown
E06	Over-pressure	Protective shutdown
E07	Condensation sensor open circuit	Keep working
E08	Condensation sensor short circuit	Keep working
E09	Water temp. sensor open circuit	Keep working
E10	Water temp. sensor short circuit	Keep working
E11	Poor refrigeration efficiency	Protective shutdown
E13	Pump or water level fault	Protective shutdown

Maintenance of Machine Head

⚠ Note: Maintenance must be done by a qualified professional personal.

⃠ Warning: Before maintenance or manual clean, be sure to cut off the water source and power supply.

Exterior cleaning

- Frequently clean the environment around the ice machine to keep it clean. Do not block the vents.
- The outer enclosure should be cleaned with a mild detergent and then wiped clean. If necessary, use commercial stainless steel cleaners and polishes.

⚠ Note: Stainless steel may rust without proper maintenance.

Inlet water filter

- The filter element should be inspected regularly. It is recommended to replace filter element every month to every 3 months.

Interior cleaning

- The inside of the ice storage bin can be washed directly with water pipes.

⚠ Note: Check and confirm the water pressure lower than the maximum allowed pressure. Do not flush the part above the water pump or the evaporator directly for water protection.

Condenser

- For the air-cooled ice maker, the condenser should be cleaned every three weeks. Use a soft brush or a vacuum cleaner with a brush to brush it up and down along the fin direction, to avoid damage to the fins and further affecting the cooling effect.
- The condenser filter should be cleaned every 2 weeks.

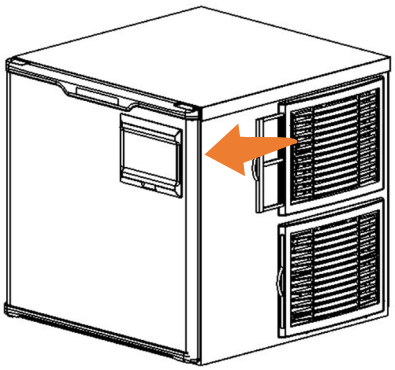

⚠ Note: Be careful when doing the condenser cleaning as the edges of the fins are sharp.

Water pipe

- In order to ensure food safety, the water pipe of the ice machine should be cleaned regularly.

Wintering

- Turn off the water and power supply, drain the residual water from the water trough, inlet pipe and drain pipe.

⚠ The maintenance of the ice machine is not covered by the manufacturer's warranty!

Clean Function

⚠Note: Please empty the bin of ice in advance.
⚠Note: Please clean and sterilizing the bin and do complete rinsing.
⚠Note: Please clean and sterilizing the ice sliding board, water distribution pipe, water supply pipe, water pump, then do complete rinsing.

- Turn on the ice maker; push “clean” button for 3 seconds, the ice maker will get into clean process. Put in proper amount of clean solution manually followed by the clean and sterilizing process instruction.
- Push “clean” button. The ice maker will do auto clean for about 15 minutes. Please do spray cleaning to the evaporator at the mean time to insure a complete clean. When finished, the led display flashes “Clean” slowly again.
- Put in proper amount of sterilizing solution manually followed by the clean and sterilizing process instruction. Push the “clean” button again, the ice maker will do auto sterilizing for about 15 minutes. Please do spray sterilizing to the evaporator at the mean time to insure a complete sterilizing. When finished, the ice maker will get into rinsing process, the process will take about 5 minutes， and do 5 cycles rinsing.
- The ice maker will get back to do ice making as soon as the clean process end.
- Please throw away the next 5 batches ice in case of cleaner remained.

Service Call

If the ice machine works abnormally, please confirm below before making a service call:

1. Check the water supply
   - ✓ whether there is water in the water trough;
   - ✓ whether the water pressure for the ice machine is 0.13MPa to 0.55MPa; the water temperature is 5-35 °C;
   - ✓ whether the water valve is open;
   - ✓ whether there is no water leakage;
2. Check the power
   - ✓ whether the indicator on the display panel is ON;
   - ✓ whether the panel display does not display the OFF standby state;
   - ✓ If the LED on the display panel is not ON, check whether the plug and socket are normal, and whether the power supply switch is ON.
3. Check nameplate and series number
   - ✓ Check the nameplate located on the side or back of the ice machine and record the model and series number of the ice machine.

⚠Note: If the machine fails due to the user’s faults, such as no supply of water, electricity or environmental factors, rather than the fault of the ice maker, the door-to-door service will be charged.

Common Faults and Troubleshooting of CP243318A Machine Head

Fault	Potential cause	Troubleshooting
Not working Indicator is OFF	Power switch not turned on Plug is loose	Turn on the power switch Check plug and socket
Shutdown every 3 minutes after startup; the display shows E04 high temperature The display shows E06 high pressure protection	The ambient temperature is too high Condenser is dirty and blocked High pressure switch wires fallen off Fan does not start	Normal working temperature range of 5-40 °C Clean the condenser Check and correct high pressure switch wires Check and correct the fan
Ice defrost abnormal	Ambient temperature too low Defrost valve does not start normally Ice thickness too thin or too thick	Normal working temperature range of 5-40 °C Check and correct the defrosting valve Check and correct ice thickness setting
Poor transparency of ice cubes; ice cubes too thin or incomplete	Ice thickness too thin Water pressure too low Water temperature too high Inlet water valve does not work Inlet water valve is dirty and blocked Water leaking Inlet water filter has not been replaced for a long time	Check and correct ice thickness setting Check that the water supply pressure is 0.13MPa to 0.55MPa Water temperature of 5-35 °C Check and correct the inlet water valve Check whether water leaks and correct Check and correct the inlet water filter
Too slow in ice making	The condenser or air filter is dirty High ambient temperature Poor ventilation Water temperature is too high	Clean the condenser and filter screen Normal working temperature range of 5-40 °C Check the environment around the ice machine Check the water supply temperature of 5-35 °C
Too much noise	The ice machine is not placed in a leveled foundation or the ice maker is not leveled.	Level the ice machine

Daily Use, Maintenance and Safety Precautions of Ice Dispenser Bin

- **Cut off the power supply before maintenance and repair!** ⚠
- Maintenance and repair must be performed by qualified professionals.
- Before maintenance and repair, please read this manual carefully.
- Do not extend the hands or hard rods into the ice dispenser in the live state tshrough its top opening!

- If you want to directly take ice from the top of the ice dispenser, make sure
- that the power plug has been removed (i.e. the power supply is cut off), to protect the personal safety from being endangered by the sudden automatic startup of stirring against freezing!
- Please handle the ice gently. It is forbidden to forcibly press the lower end of the ice outlet. In severe cases, related parts may be damaged.
- The ice cubes inside the ice dispenser should be used as soon as possible. It is recommended to use up one batch of ice cubes within one day. Otherwise, a lot of fine crushed ice will be generated, which will block the ice outlet channel!
- If the ice dispenser is not in use for a long time, please remove the power plug and remove all ice cubes inside the ice dispenser. Wipe water stains, clean the outer surface and keep the ice dispenser in a dry and ventilated place.
- If the ice dispenser is not in use for more than three months, please reset the internal controller before further using it.

Common Faults and Troubleshooting of CP243317A Ice Dispenser Bin

List of Common Faults:

Fault	Possible Cause	Inspection and Troubleshooting
When the lower end of the ice outlet, the internal turntable does not run.	The ice dispenser is not powered on.	1. Check whether the power plug is inserted properly! 2. Check whether there is a qualified external power supply!
When the lower end of the ice outlet and the internal turntable is running, no ice is discharged.	There are no ice cubes inside the ice dispenser.	Fill ice cubes equivalent to at least 1/2 of the internal capacity of the ice Dispenser.
	The ice outlet channel is blocked.	1. Check whether the size of ice cubes is appropriate. 2. Remove the power plug and check whether the ice outlet channel is blocked. If it is blocked, remove ice cubes in the ice dispenser, clear the ice outlet channel, and insert the power plug.