GLOBAL™ INDUSTRIAL

We can supply that.®

User's manual	Manual del usuario	Manuel de l'utilisateur
Customer Service US: 1-800-645-2986	**Servicio de atención al Cliente US: 1-800-645-2986**	**Service à la clientèle Canada: 888-645-2986**

STORAGE CABINET, TURN HANDLE,
48" x 18" x 78"
36" x 24" x 78"
36" x 18" x 78"



CONTENTS

REF.	QTY.	DESCRIPTION
1	1	LEFT SIDE BACK PANEL
2	1	RIGHT SIDE BACK PANEL
3	1	LEFT SIDE PANEL
4	1	RIGHT SIDE PANEL
5	1	BOTTOM FRONT INNER SUPPORT CHANNEL
6	1	BOTTOM FRONT KICK PLATE
7	1	BOTTOM SHELF
8	1	TOP SHELF
9	4	GUSSET REINFORCEMENT PLATE
10	1	LEFT DOOR
11	1	RIGHT DOOR
12	4	SHELF

REF.	QTY.	DESCRIPTION
H1	22	SCREW
H2	4	6.5 PLAIN WASHER
H3	4	5.25 mm SPLIT WASHER
H4	4	M6 x 19 mm ROUND PHILLIP HEAD SCREW
H5	6	HINGE PIN
H6	2	BUMPER
H7	12	PLASTIC HINGE CAP
H8	16	SHELF CLIP
H9	6	PLASTIC INSERT
H10	1	RIGHT HAND DOOR HANDLE
H11	2	BACK PLATE
H12	4	5.5mm SPLIT WASHER
H13	4	M5 x 8mm ROUND PHILLIP HEAD SCREW
H14	1	COTTER PIN
H15	1	LOCK LATCH
H16	2	LOCKING ROD
H17	1	LOCKING BRACKET
H18	1	LEFT HAND DOOR HANDLE
H19	2	ROD GUIDE
	2	KEY

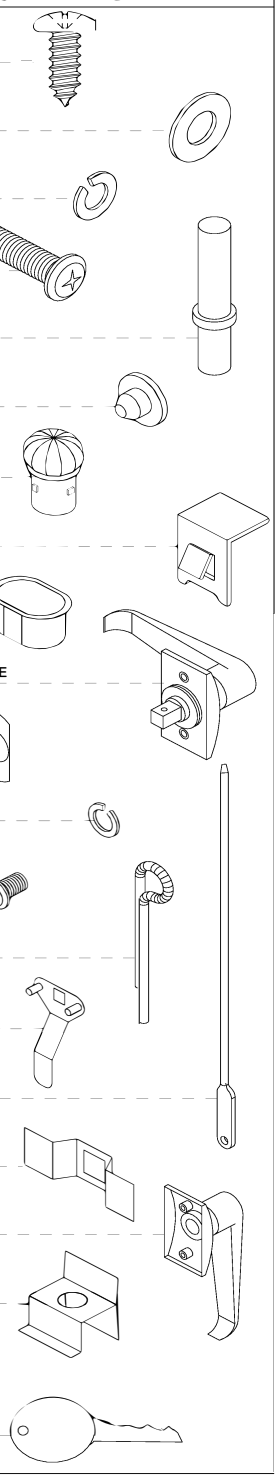

⚠ WARNING.

1. USE 2 PEOPLE TO ASSEMBLE.
2. LAY PARTS ON SOFT SMOOTH NON-SCRATCH SURFACE.
3. DO NOT OVERLOAD SHELVES.
4. LOAD LOWER SHELVES FIRST.
5. DO NOT CLIMB OR STAND ON SHELVES.

STORAGE CABINET TURN HANDLE

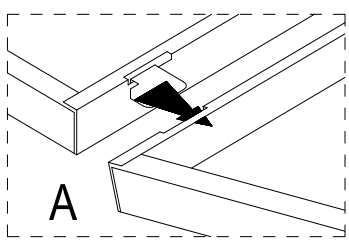

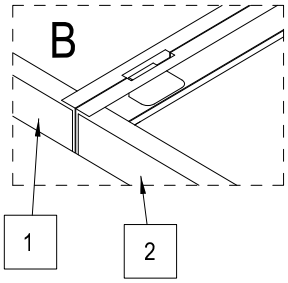

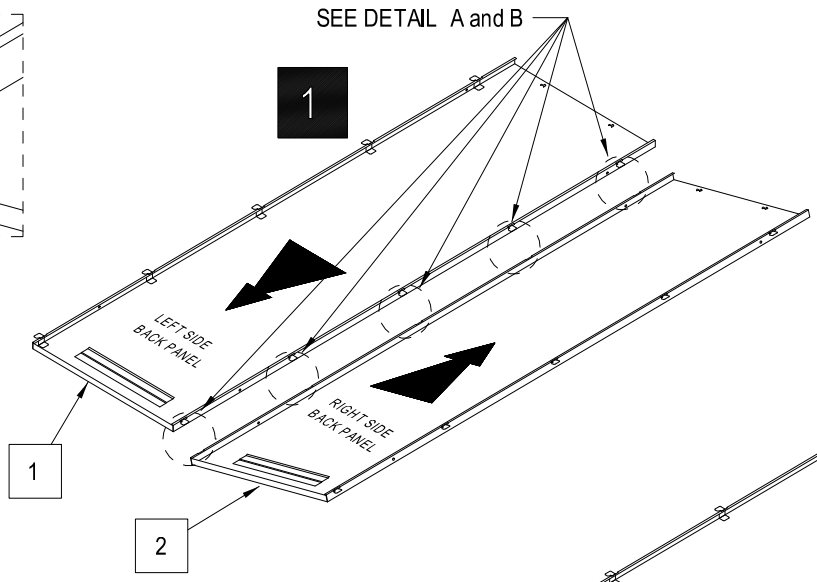

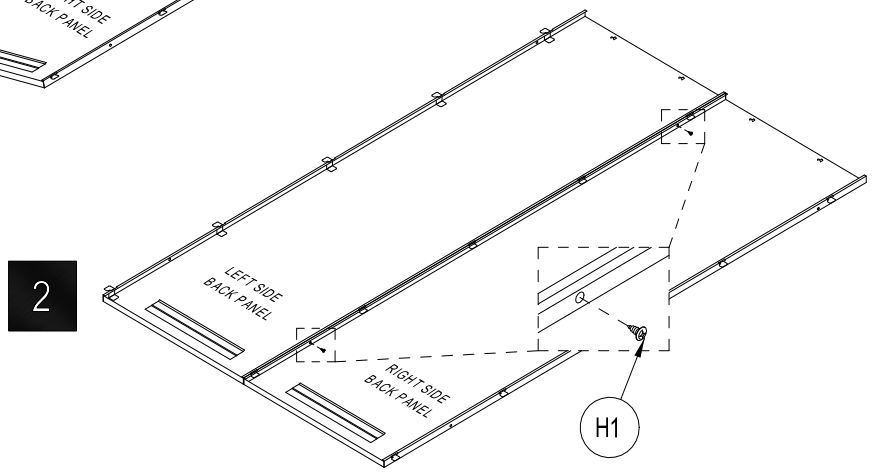

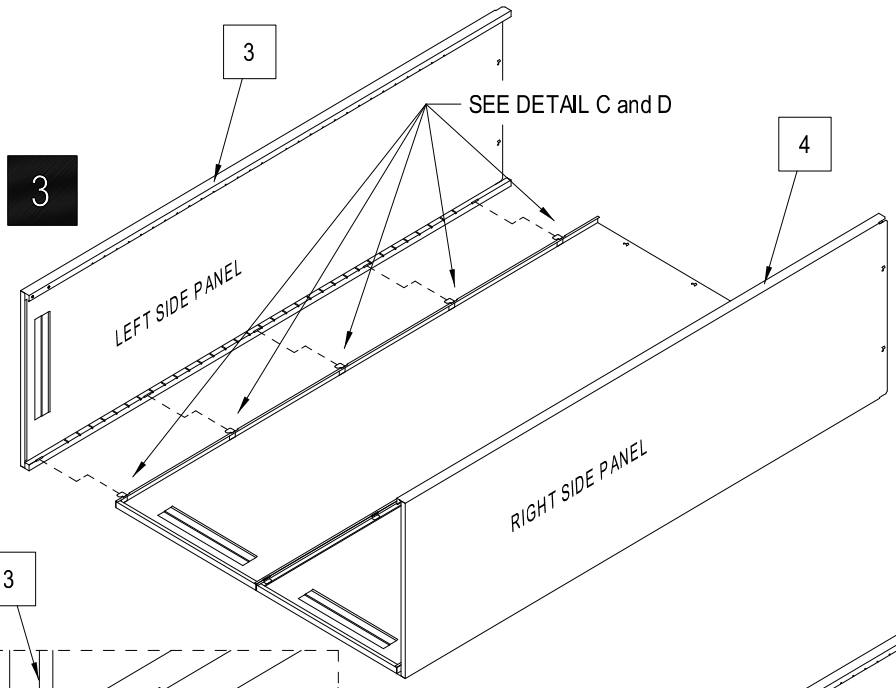

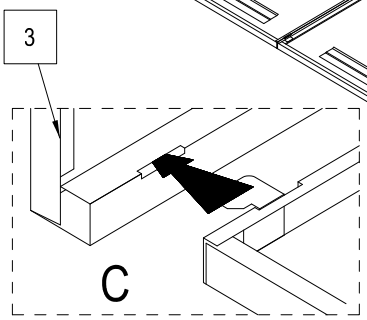

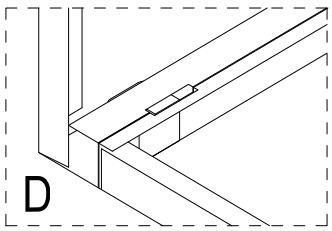

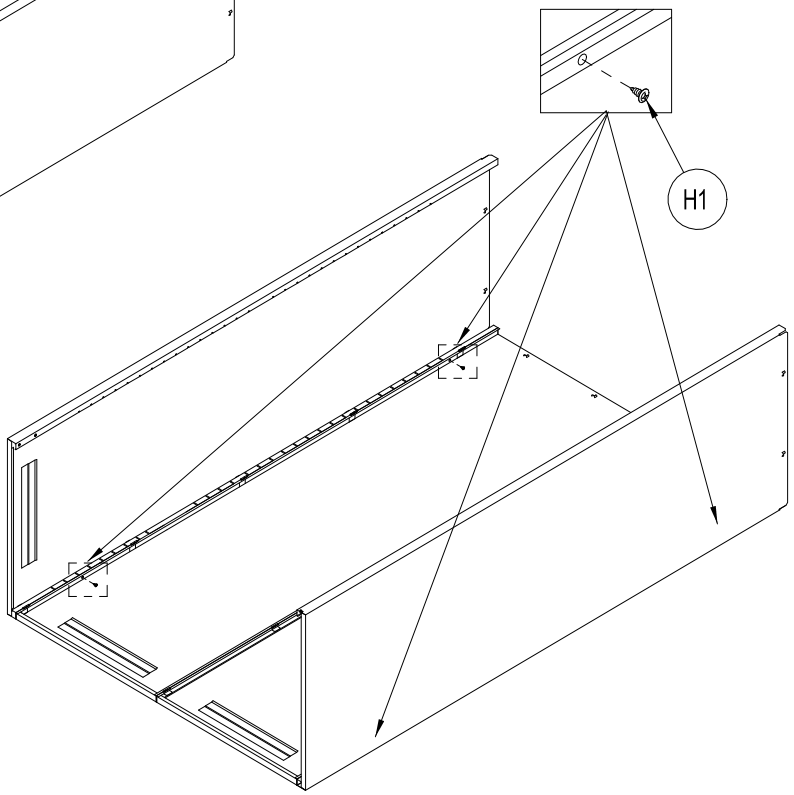

STORAGE CABINET TURN HANDLE

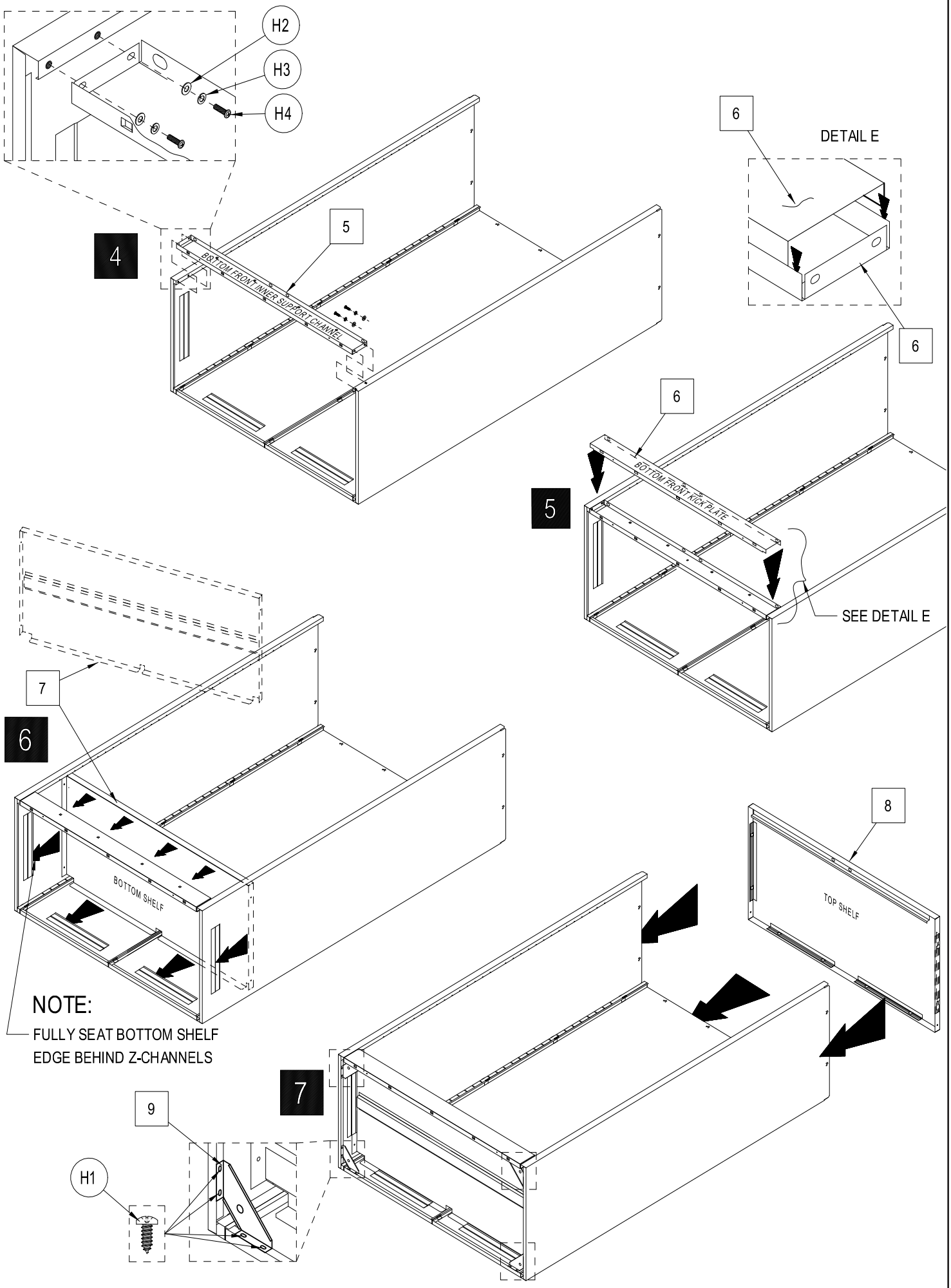

STORAGE CABINET TURN HANDLE

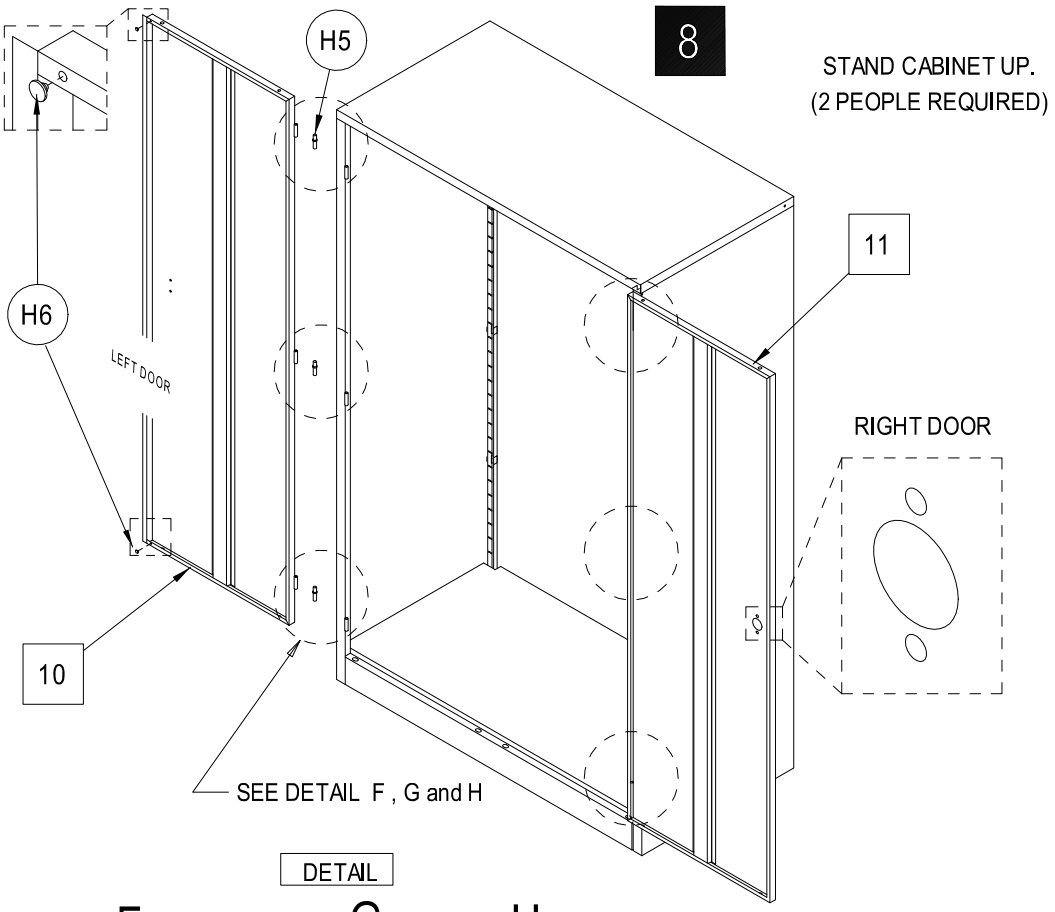

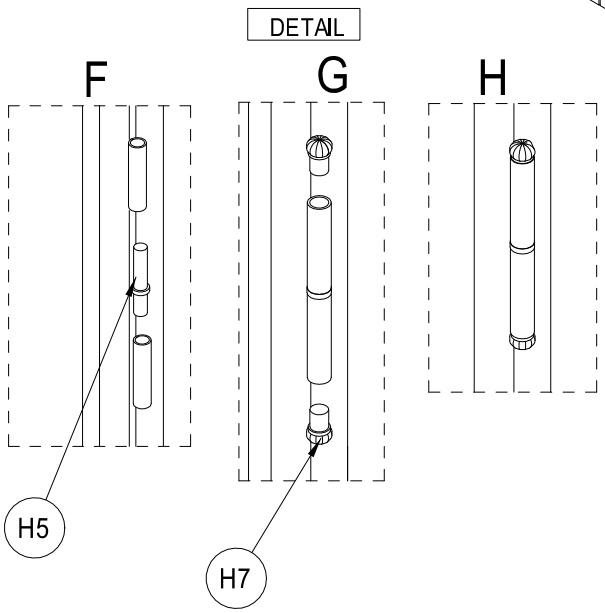

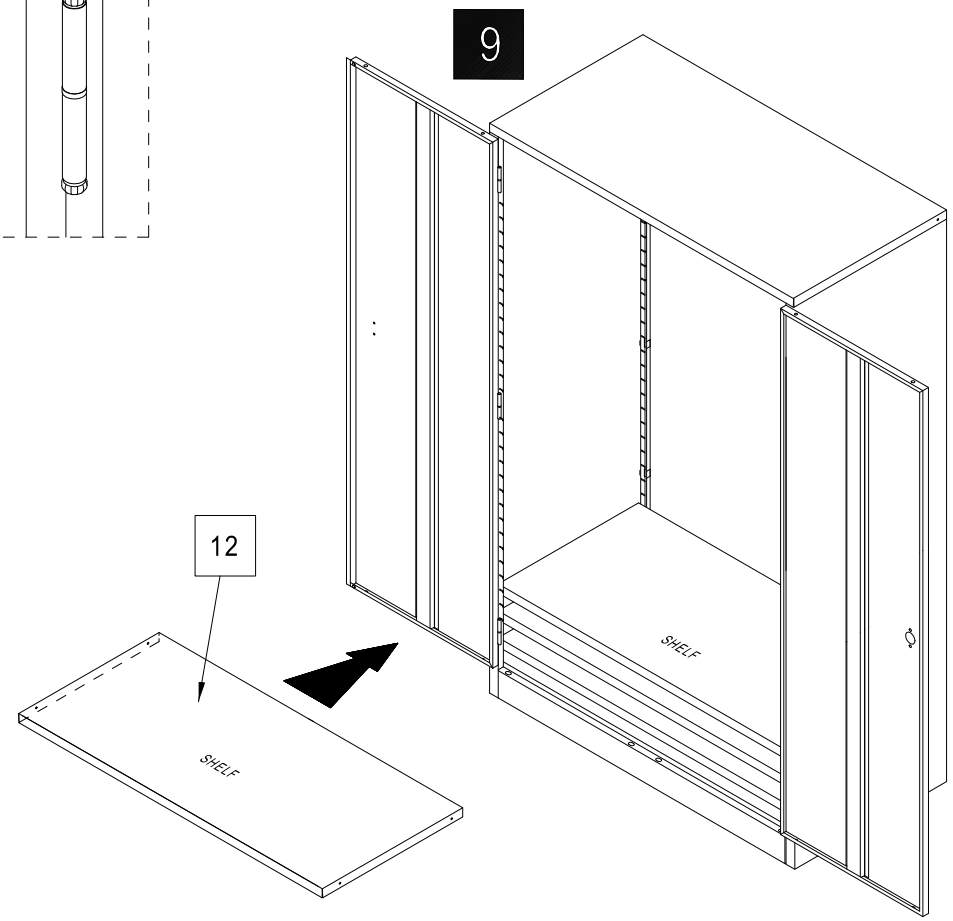

STORAGE CABINET TURN HANDLE

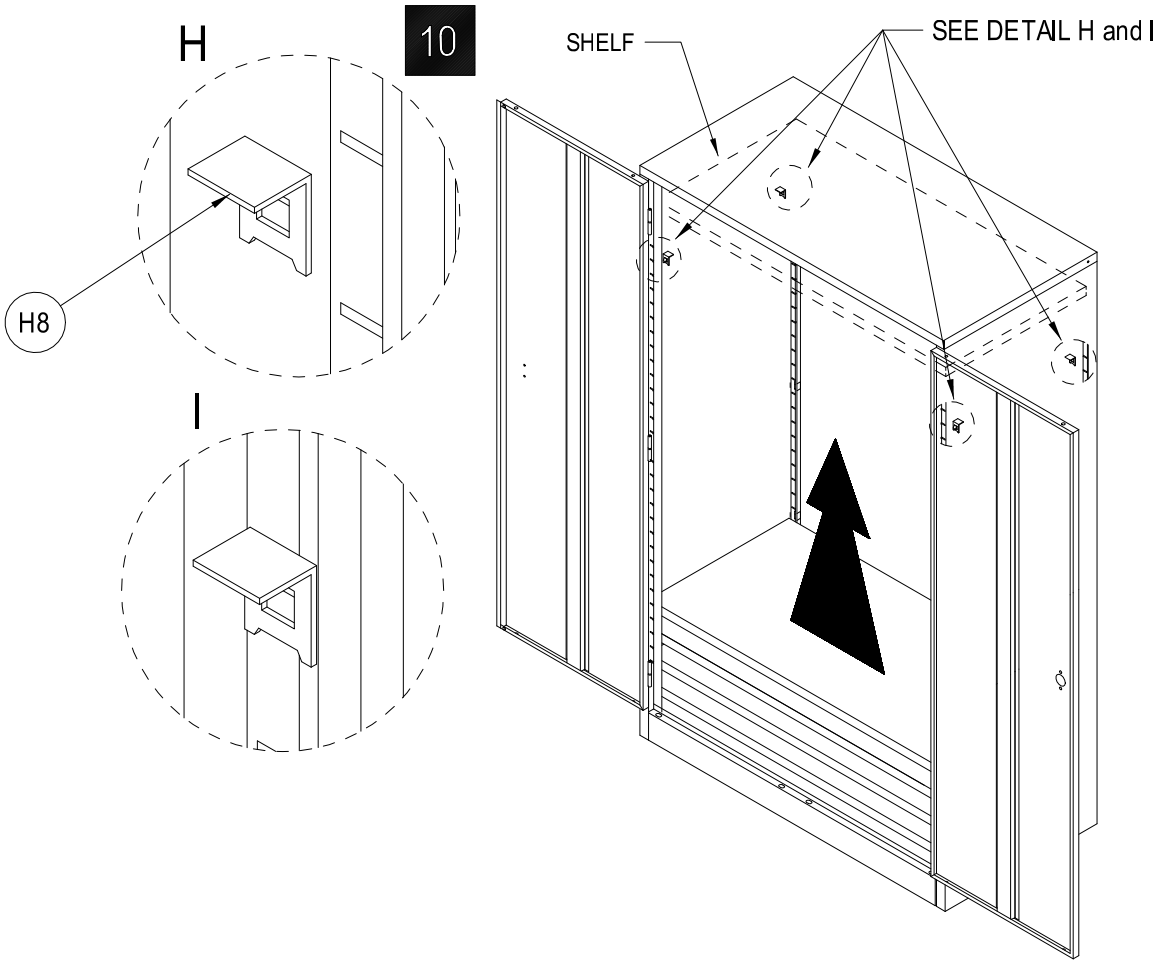

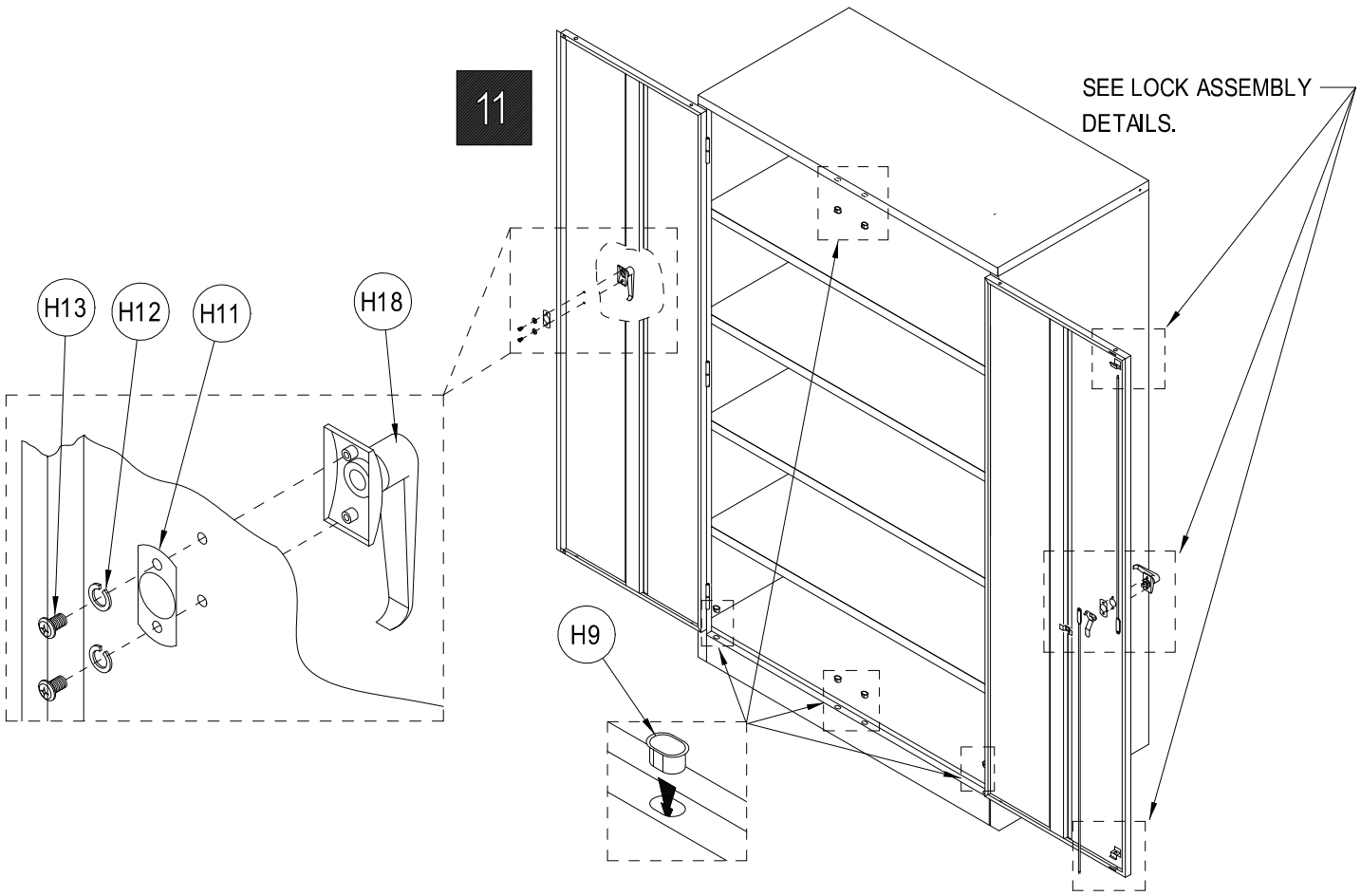

LOCK ASSEMBLY

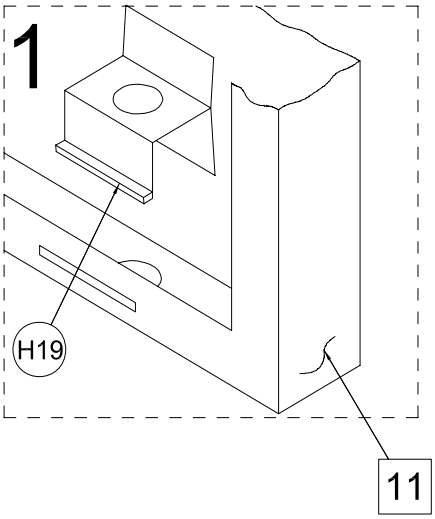

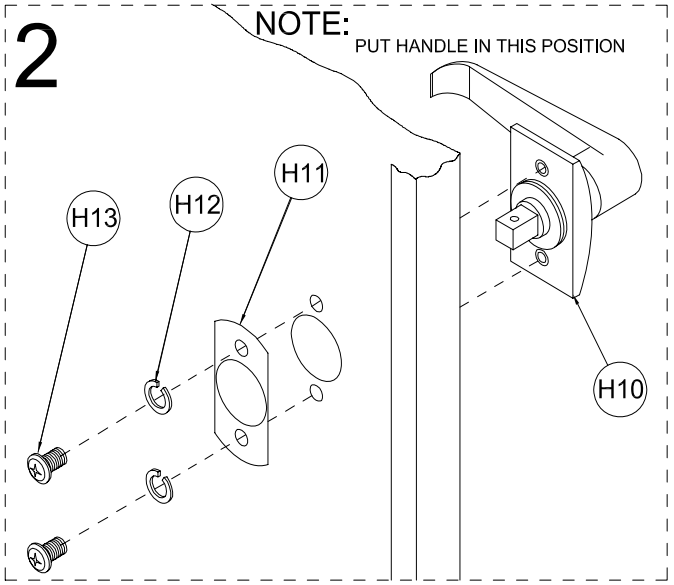

RIGHT DOOR ROD ASSEMBLY

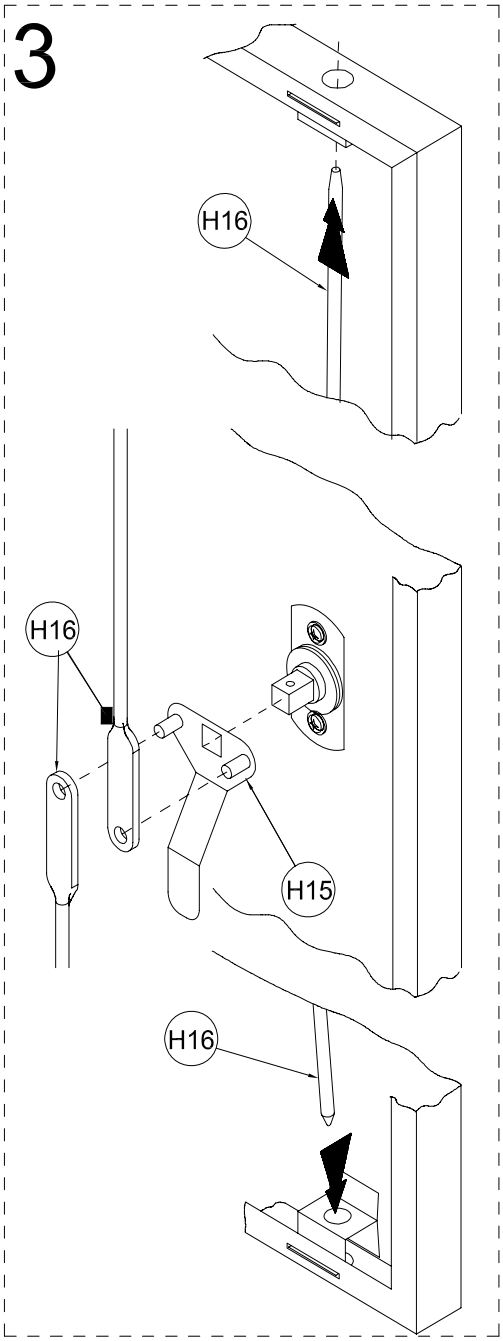

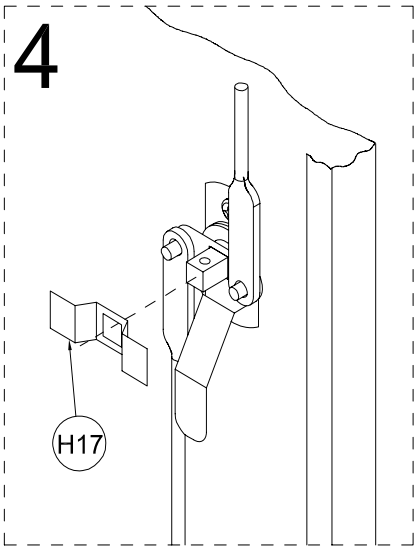

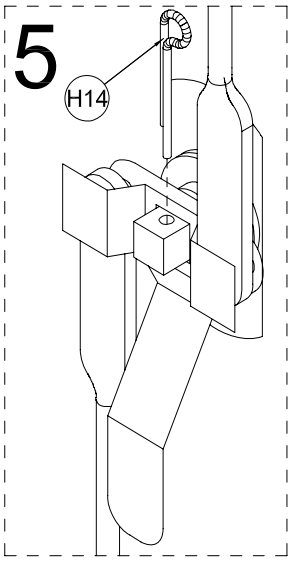

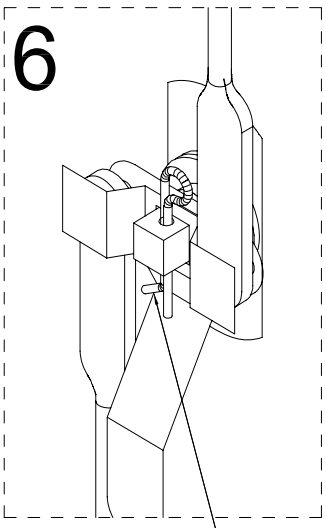

BEND 1 LEG OF
COTTER PIN WITH PLIERS.