GLOBAL™ INDUSTRIAL
We can supply that.®

User's manual	Manual del usuario	Manuel de l'utilisateur
Customer Service US: 1-800-645-2986	Servicio de atención al Cliente US: 1-800-645-2986	Service à la clientèle Canada: 888-645-2986

Protective 3 Rib Steel Guard Rail

Models: B3230743, B3230744, 670804, B3230745, 670805, B3230746, 670806, B3230742, 670807, 670811, 670809, 670810

Ref	Qty	Description	Ref	Qty	Description
1		Post- 22", 42", 60"	H1	6	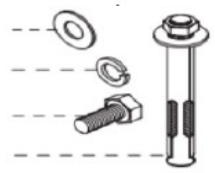
2		Rail- 2', 3' 4', 5', 6',	H2	6	
		7', 8', 9', 10'	H3	6	
			H4	4	

STEP 1

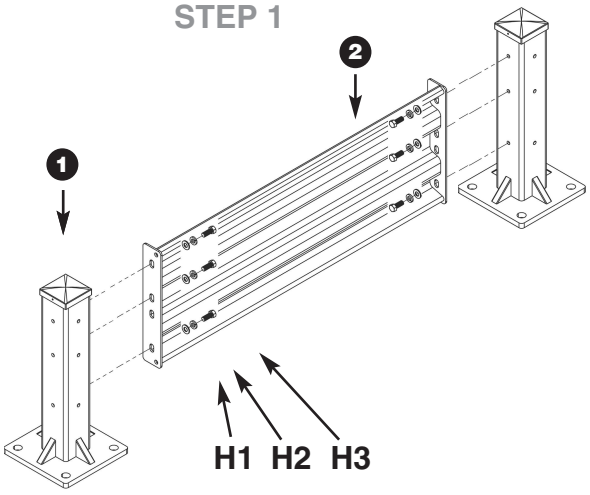

STEP 2

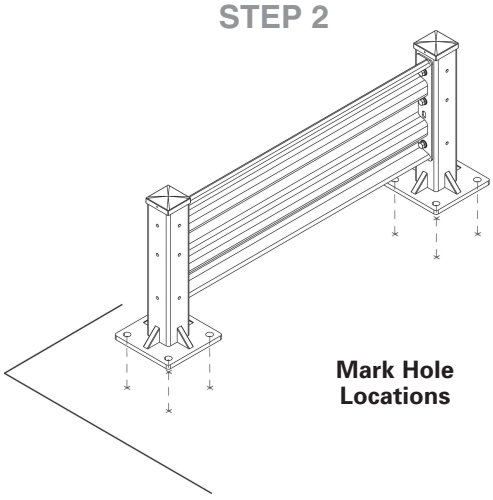

Mark Hole Locations

STEP 3

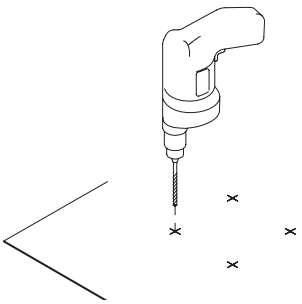

Drill 5" Deep Hole Using 3/4" Concrete Bit

STEP 4

Insert and Set Concrete Anchor Into Hole

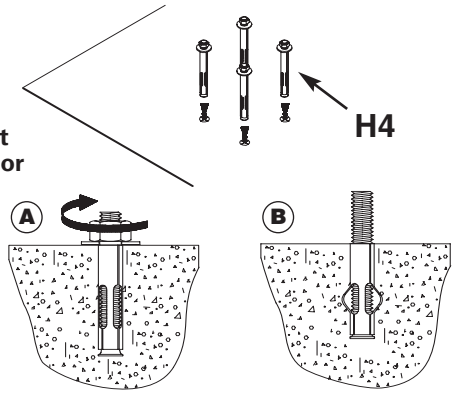

STEP 5

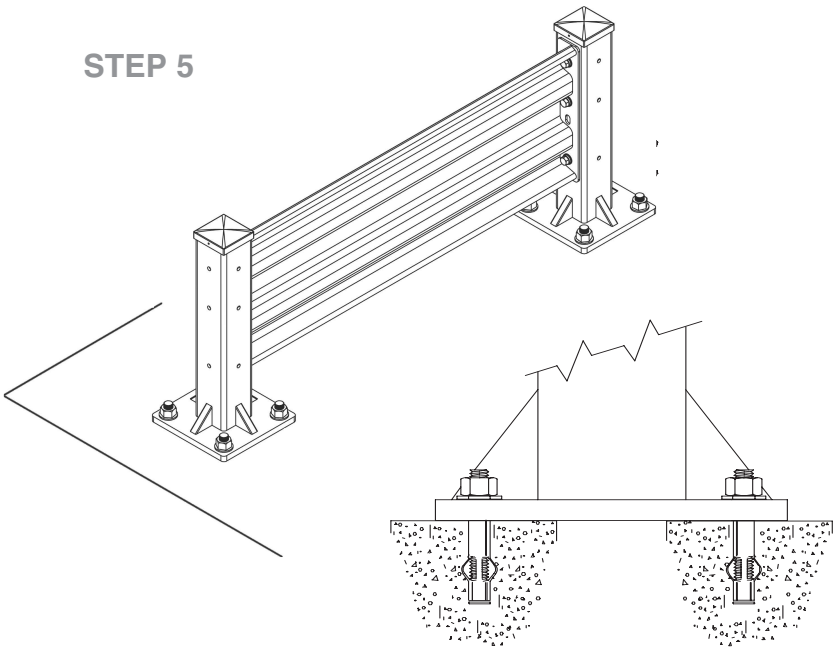

⚠ WARNING ⚠

DESIGNED FOR MAXIMUM IMPACT OF 15,000 POUNDS AT 4 MILES PER HOUR

GLOBAL™ INDUSTRIAL

ANCHOR BOLLARD 12" FROM OBJECT BEING PROTECTED