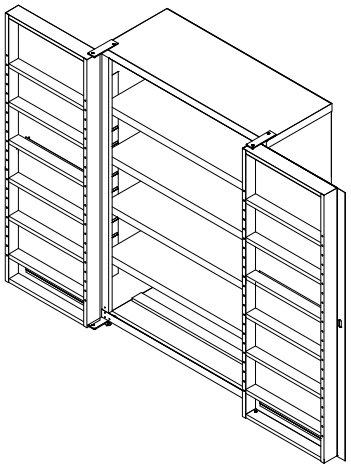

FS Workspace
Business • Education • Facility Supplies
FilingSupplies.com

FilingSupplies.com | 800-810-3453

KD BIN CABINET
SHELF INSTALLATION

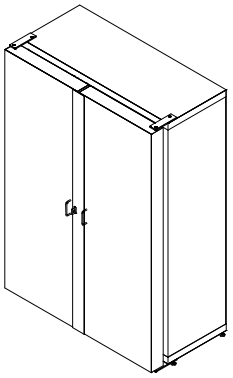

CONTENTS		
REF.	QTY.	DESCRIPTION
1	4	CABINET SHELF
2	12	DOOR SHELF
H1	24	
H2	24	

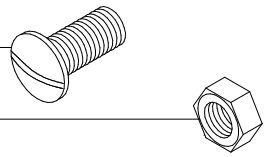

CABINET SHELF INSTALLATION

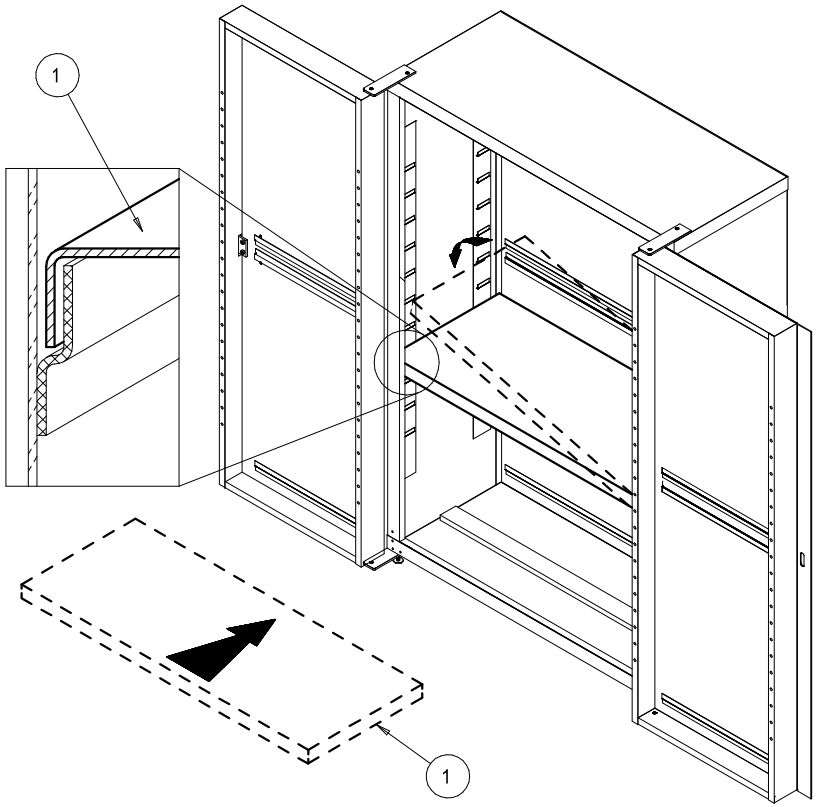

DOOR SHELF INSTALLATION

