ASSEMBLY INSTRUCTIONS

GLOBAL INDUSTRIAL™
We can supply that.®

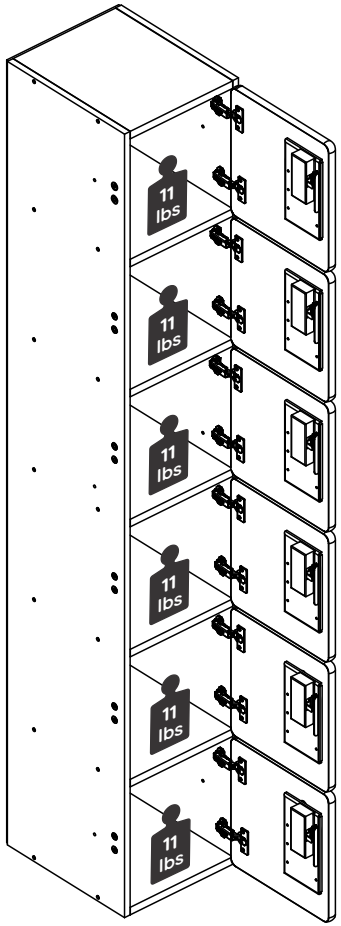

66 lbs
MAXIMUM WEIGHT SUPPORTED

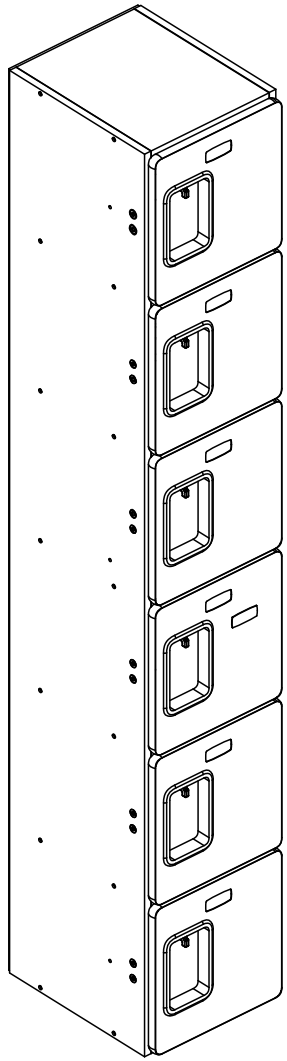

WOOD LOCKER, 6 - TIER

Maintenance Tips

*To clean or remove stains, use a piece of flannel dampened with a mixture of alcohol and water. Avoid direct sunlight.

HARDWARE LIST

The hardware drawings are full-scale, so their dimensions are the same as the actual hardware.

ID	IMAGE REFERENCE	# OF PIECES
A	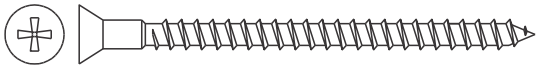	28
B	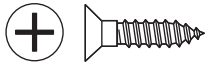	48
C	 Silicone stopper	12
D	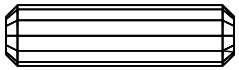	28
E	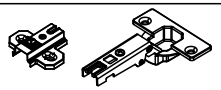	12
F		40
H		03
K		06



ANTI-TIPPING KIT (Quantity per module)

L	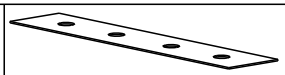	01
M		02
N		01
O	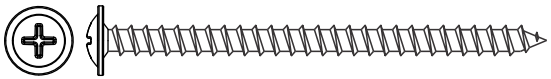	01

NOTE: OPTIONAL BUILT-IN LOCKS SOLD SEPARATELY.
SEE RELATED ITEMS BELOW.

P	MODEL 01 - KIT BUILT-IN LOCKERS (Lift up hasp locker Kit) 	06
Q	MODEL 02 - KIT BUILT-IN LOCKERS (Electronic locker Kit) 	06

Mounting cabinets to the wall

1. Make sure that the area where the cabinets and their bases will be installed is plumb and level.
2. Check the ventilation spacing between the back of the cabinets and ensure that the side panels have been properly installed. Align the cabinets to secure them to the wall. The side panels must fully touch the wall.
3. Fold the metal plate and install it on top of the cabinets as shown below.

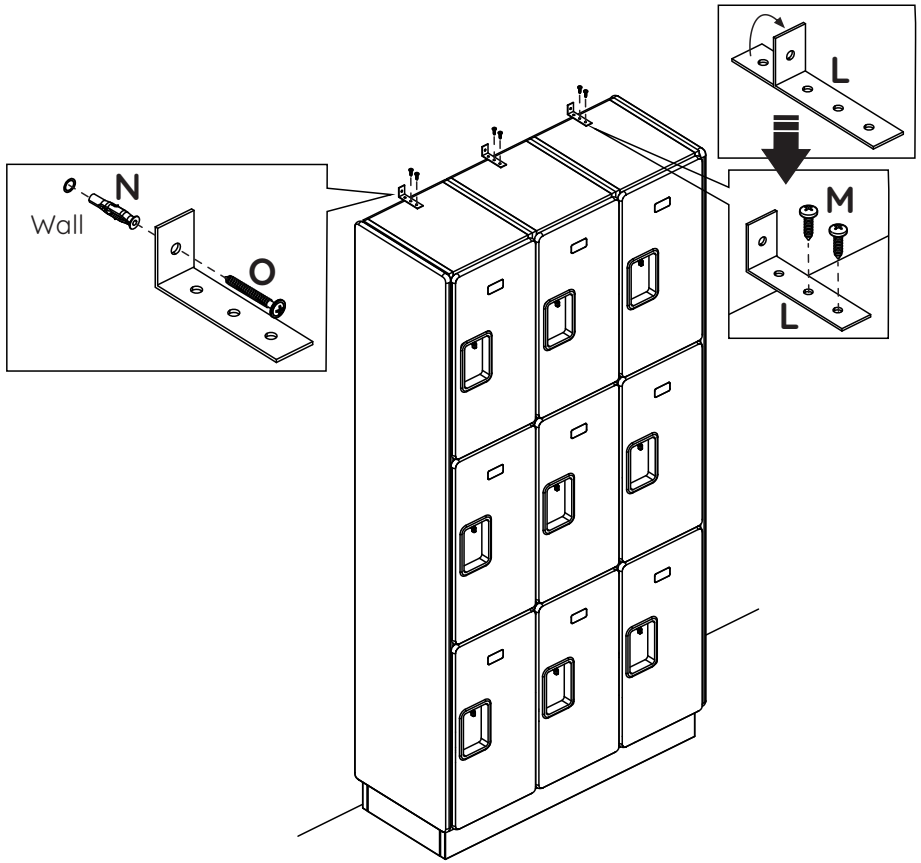

ANTI-TIPPING KIT

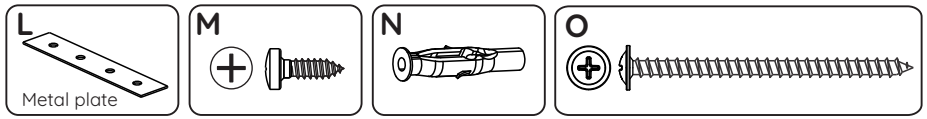

Back-to-back cabinet installation

1. Make sure that the area where the cabinets and their bases will be installed is plumb and level.
2. Check the ventilation spacing between the back of the cabinets and ensure that the side panels have been properly installed. Align the cabinets to secure them back-to-back. The side panels must fully touch each other.
3. Install the metal plates on top of the cabinets as shown below.

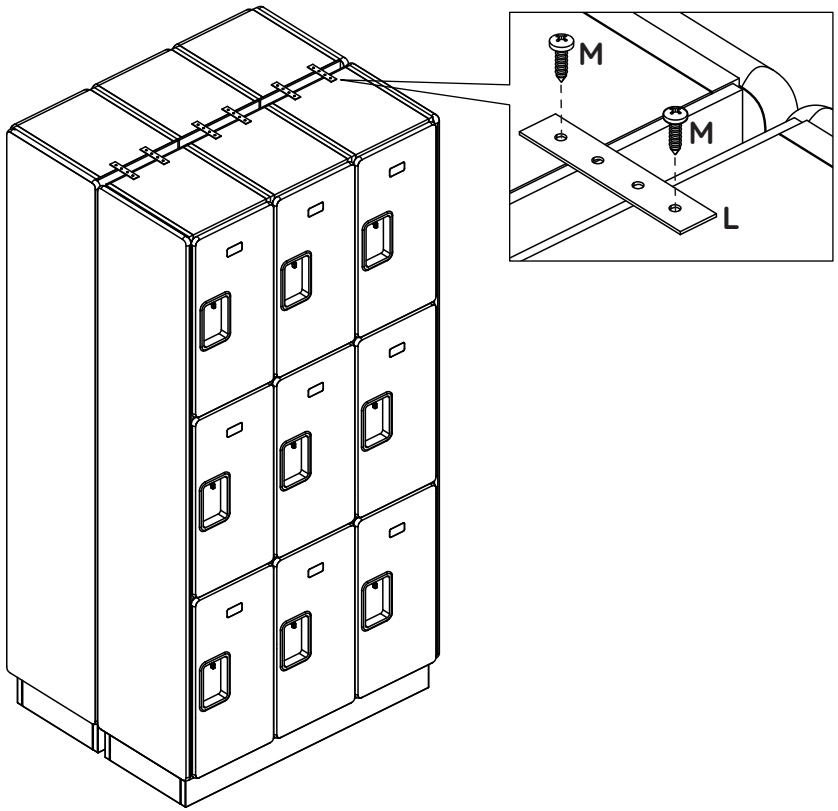

ANTI-TIPPING KIT

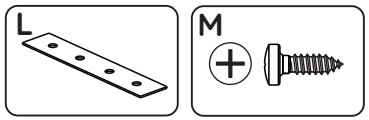

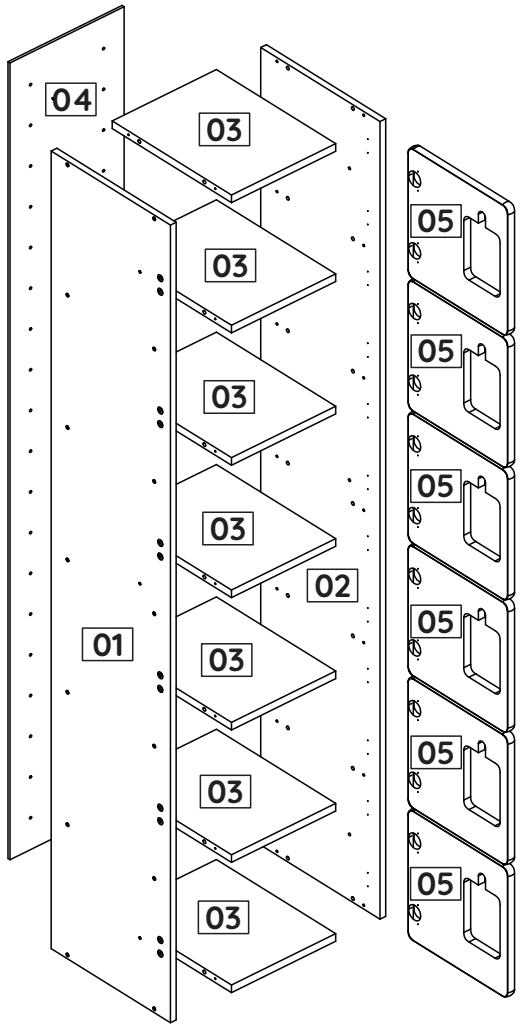

ID	Description	# Of Pieces	Dimension (Inch)
01	Left side	01	72 x 13 3/4 x 1/2
02	Right side	01	72 x 13 3/4 x 1/2
03	Shelf	07	10 3/4 x 13 3/4 x 3/4
04	Back	01	71 7/8 x 11 3/4 x 1/4
05	Door	06	11 3/4 x 11 3/4 x 3/4

1 Step

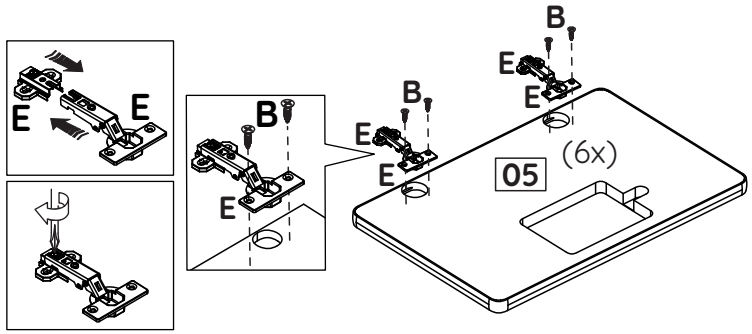

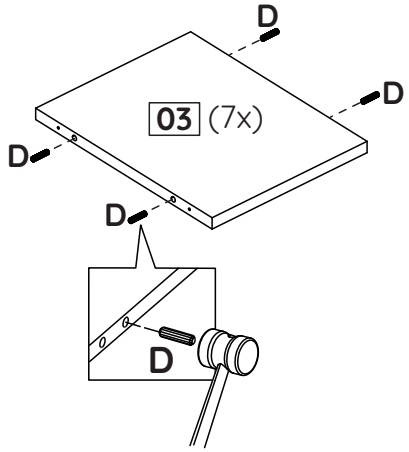

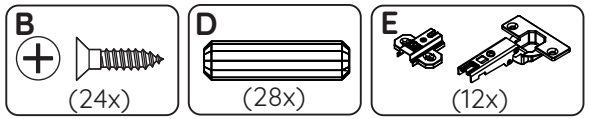

Side panel installation (add-on sold separately)

1. Make sure that the area where the cabinets and their bases will be installed is plumb and level.
2. Position the side panels so that they're aligned with the front of the cabinet body (not the door) ***Check-01***. The spacing created between the end of the panel and the back of the cabinet is for ventilation ***Check-02***.
3. After they are positioned, use the hardware that comes with the side panel to join them through the existing holes inside the cabinet wall as shown below.

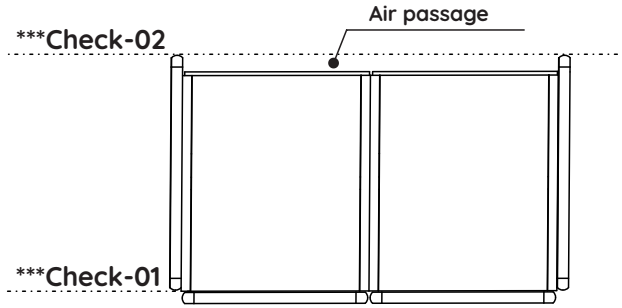

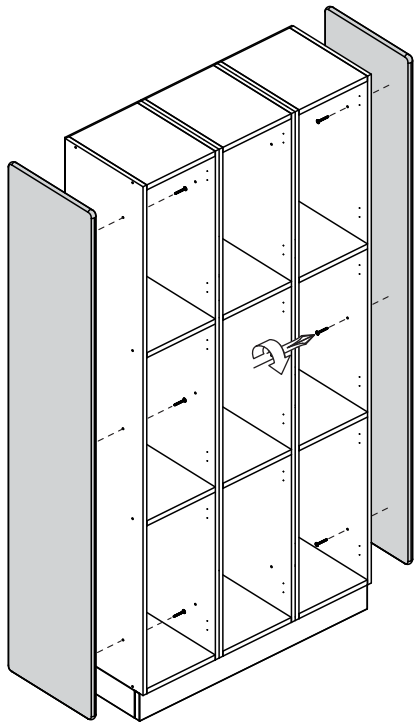

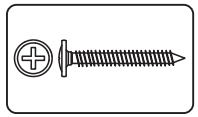

Corporate assembly

Join cabinets

1. Start by positioning the cabinets side by side, ensuring they are plumb and level.
2. After they are positioned, use hardware (H) to join them through the existing holes inside the cabinet wall, as shown below.

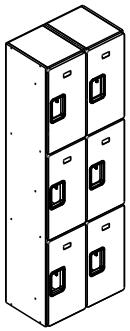

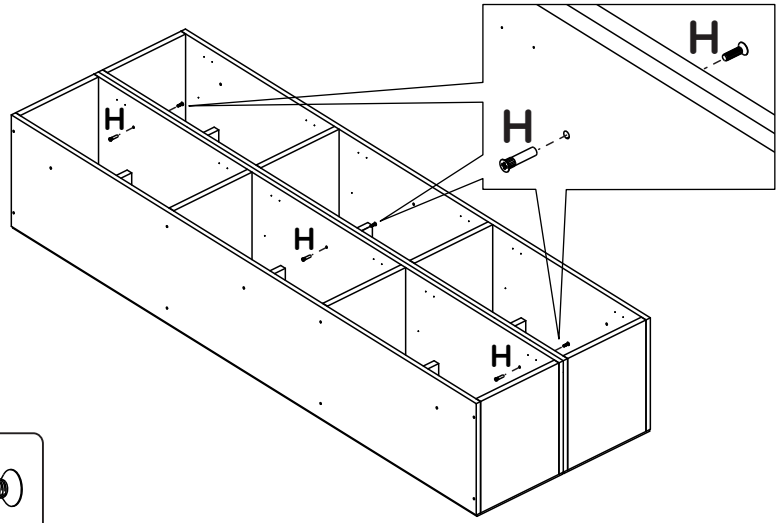

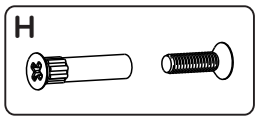

Metal base installation (add-on sold separately)

1. Make sure that area where the cabinets and their bases will be installed is plumb and level.
2. Position the metal base, aligning and centering it on the body of the previously joined cabinets.
3. After they are positioned, use the hardware that comes with the metal base component to join the parts on to the metal base to the cabinet base, as shown below.

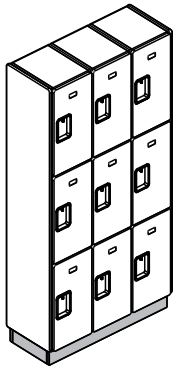

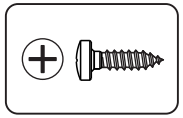

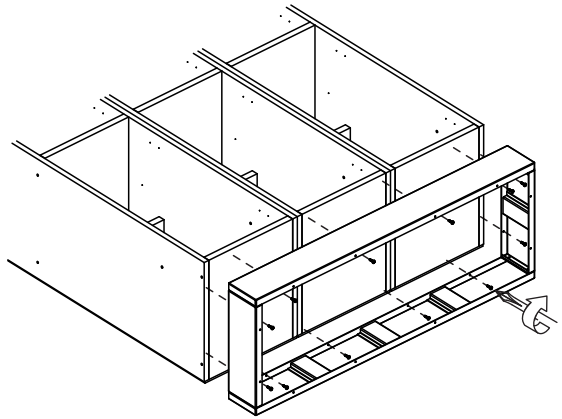

2 Step

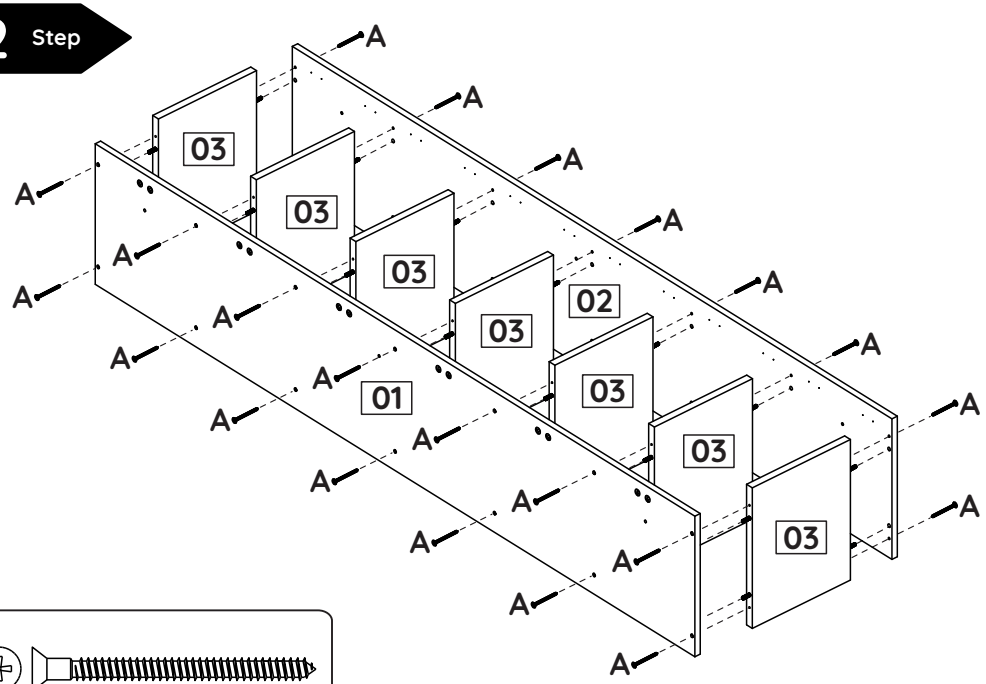

3 Step

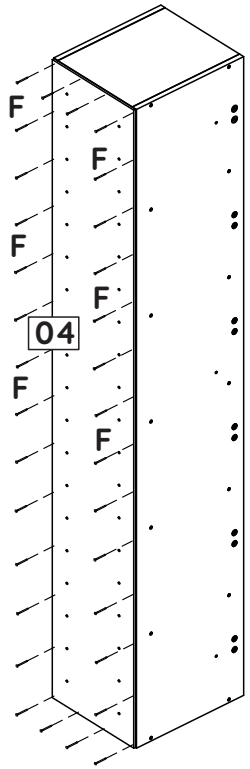

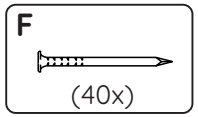

4 Step

Name plate

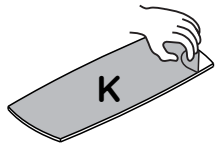

Remove the adhesive tape and then stick it in the indicated place on the furniture.

Three-dimensional door hinge adjustment: follow the instructions below.

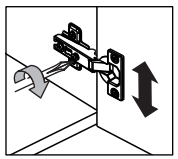

Upward and downward height adjustment

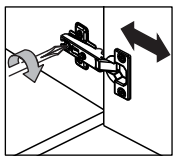

Sideways adjustment

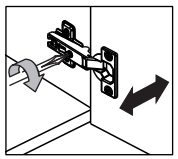

Backward and forward depth adjustment

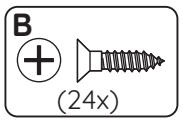

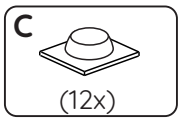

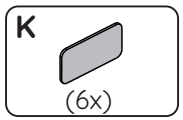

5 Step

OPTIONAL BUILT-IN LOCKS

MODEL 01 - KIT BUILT-IN LOCKERS (Lift up hasp locker Kit)

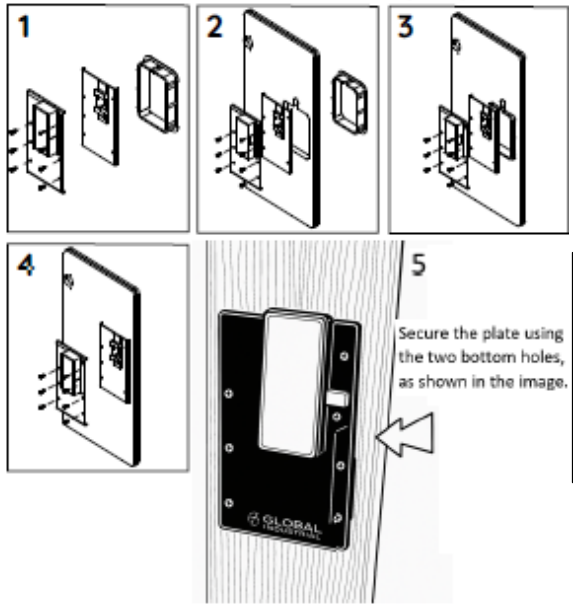

Fastening latch

Note: latch is part of the lock

Install the latch

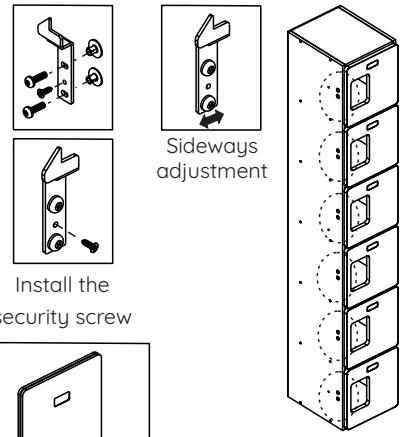

OPTIONAL BUILT-IN LOCKS

MODEL 02 - KIT BUILT-IN LOCKERS (Electronic locker Kit)

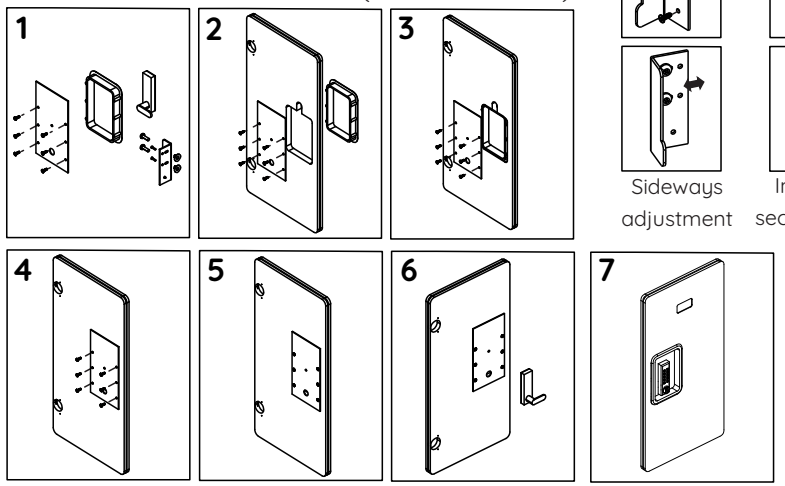

Fastening latch

Note: latch is part of the lock

Install the latch

