GLOBAL™ INDUSTRIAL
We can supply that.®

User's manual	Manual del usuario	Manuel de l'utilisateur
Customer Service US: 1-800-645-2986	Servicio de atención al Cliente US: 1-800-645-2986	Service à la clientèle Canada: 888-645-2986

Outdoor Pedestal Bottle Filling Station

Models 761222, 761222BK, 761222BL & 761222GN

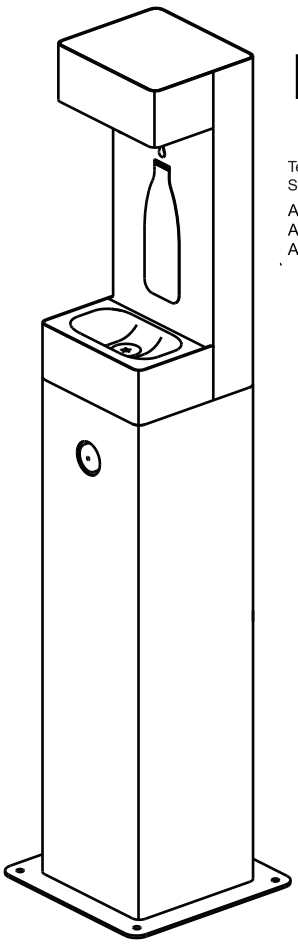

NSF/ANSI/CAN 61

Tested and certified to NSF/ANSI Standard 372/61

ASME A112.18.1/CSA B125.1
ASME A112.18.2/CSA B125.2
ASME A 112.19.3/CSA B45.4

WARNING

- All installation work must be performed by authorized service personnel.
- Two or more people are recommended to lift and install the unit.
- To avoid the risk of property damage and/or personal injury, ensure the mounting surface is adequate to support 400 lbs.
- Check local codes for plumbing requirements prior to installation.
- Refer to Rough-In Guide (page 4) prior to installation.
- Thoroughly flush all water supply lines of all foreign matter before connecting to the fixture.
- Check for any leaks before use.
- DO NOT attempt to repair or replace any part of this bottle filler unless it is specifically recommended in this manual. All other services should be referred to a qualified technician.
- For use with clean, clear potable drinking water only.
- Shut-off water supply during installation to reduce the risk of water damage.
- Freezing Caution: Before freezing temperatures occur, refer to the Draining and Winterization section of this manual (page 10) for proper preparation.
- Installation of a trap on the water drain line may be necessary; remove trap before winterization draining.
- Failure to follow safety warnings and/or installation instructions will void warranty.

Note: This unit is designed to be installed on the surface of an existing or new concrete slab. Included are the necessary vandal-resistant stainless steel bolts and washers needed to anchor this unit. Installer must provide a 1-1/2” PVC drain line (if applicable) and water supply line. All connections are made inside the item through the access doors, as shown in the drawings. It is recommended to install a shut-off valve (not included) on the water supply.

Patent Pending

Outdoor Pedestal Bottle Filling Station

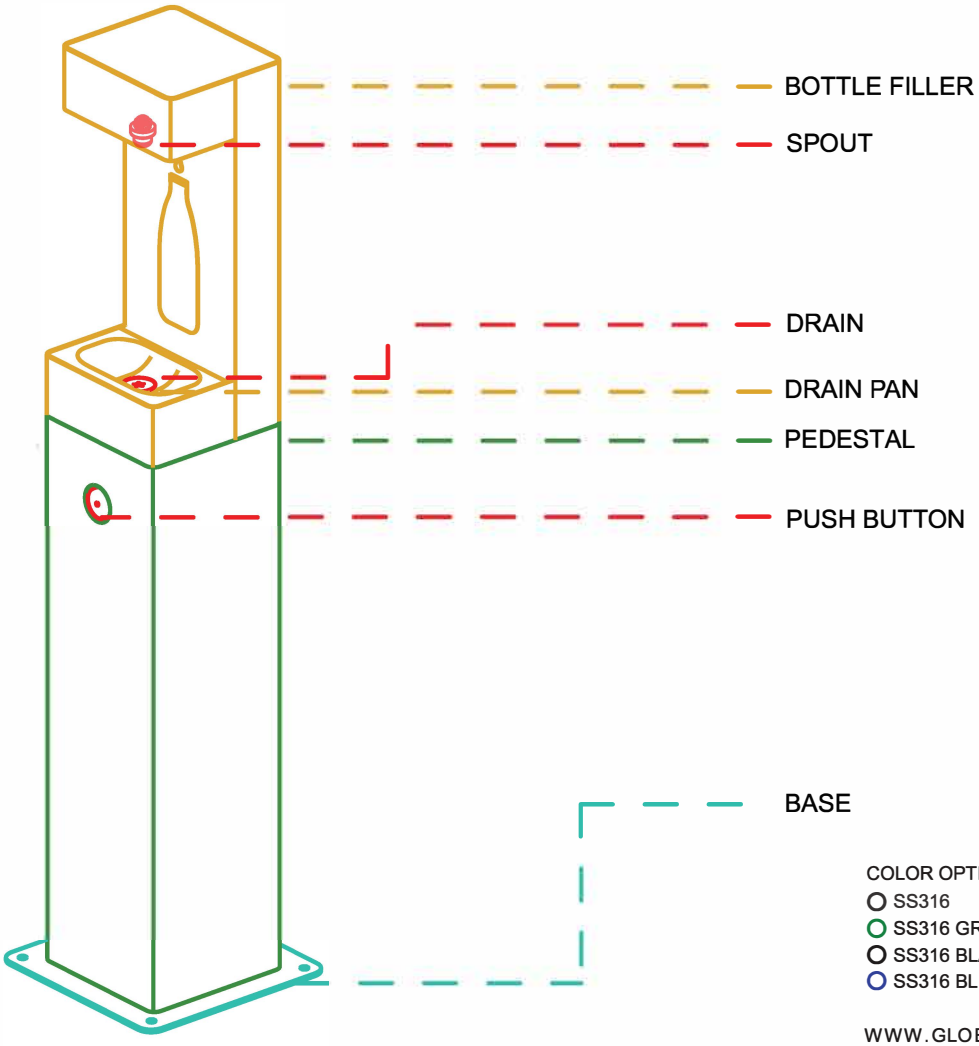

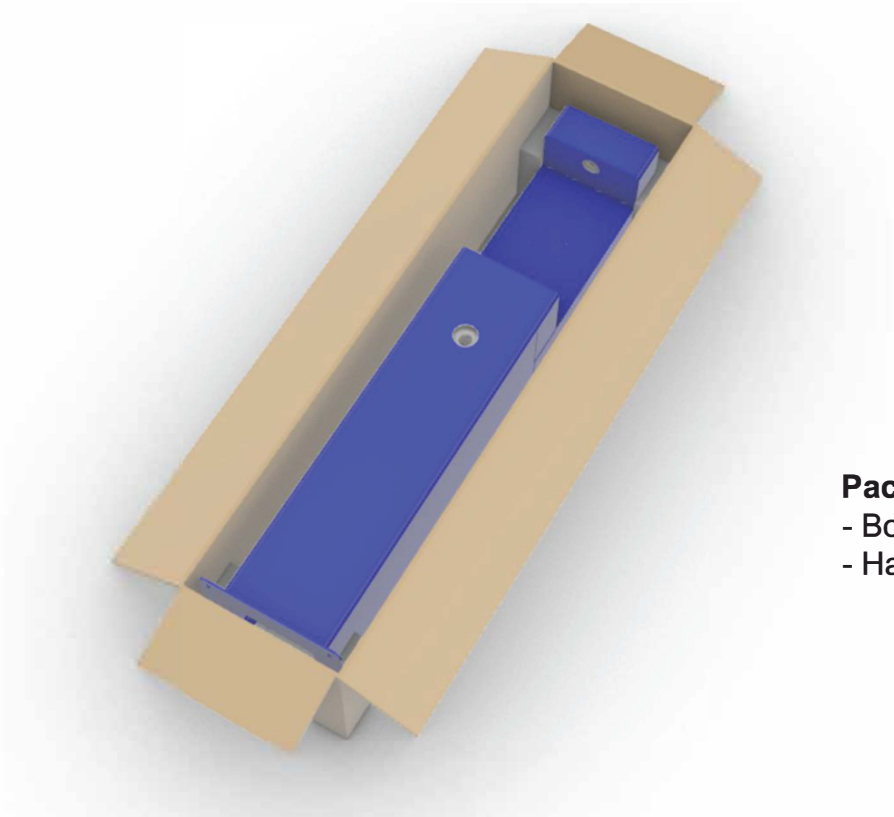

Package Contents:
- Bottle Filler Pedestal
- Hardware Bag

Patent Pending

SPECIFICATIONS

Features:	316 Stainless, Laminar Flow, Heavy Duty, Vandal Resistant
Finish:	SS Finish, Black(BK), Blue(BL), Green(GN)
Power:	No Electrical Required
Bubbler	Vandal Resistant
Activation Type:	Push Button
Mounting Type:	Floor Mount/Free Standing
Product Dimensions:	14"L x 14"W x 60-1/4"H
Weight:	86 lbs.
Installation Location:	Outdoor
No. of Stations:	1

PART BREAKDOWN

Ref.	Qty.	Description	
H1	1	Torx Key Wrench	
H2	1	Torx Drill Bit	
H3	4	Anchor Kit	

REQUIRED TOOLS


Safety Gloves


Adjustable Wrench



15-17mm Wrench


Hammer


Safety Glasses


Small Flathead Screwdriver


Phillips-Head Screwdriver

Patent Pending

Rough-In Guide

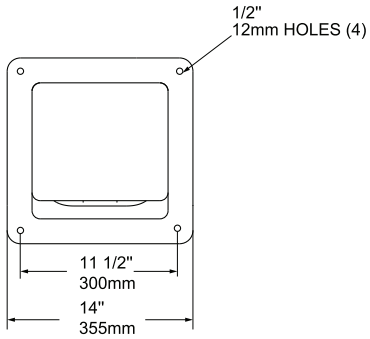

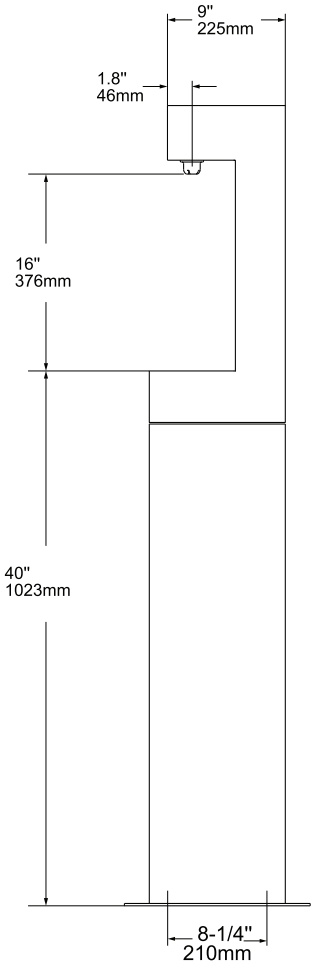

INSIDE OPENING

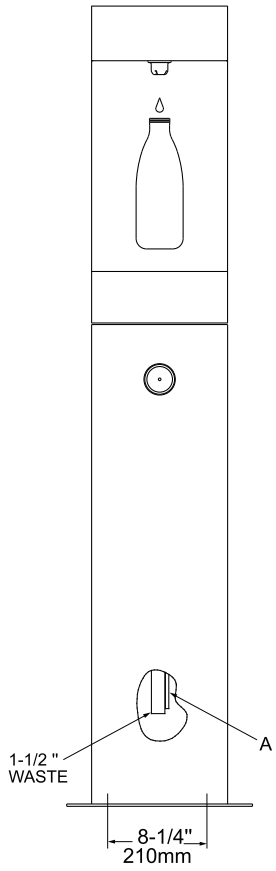

INSIDE OPENING

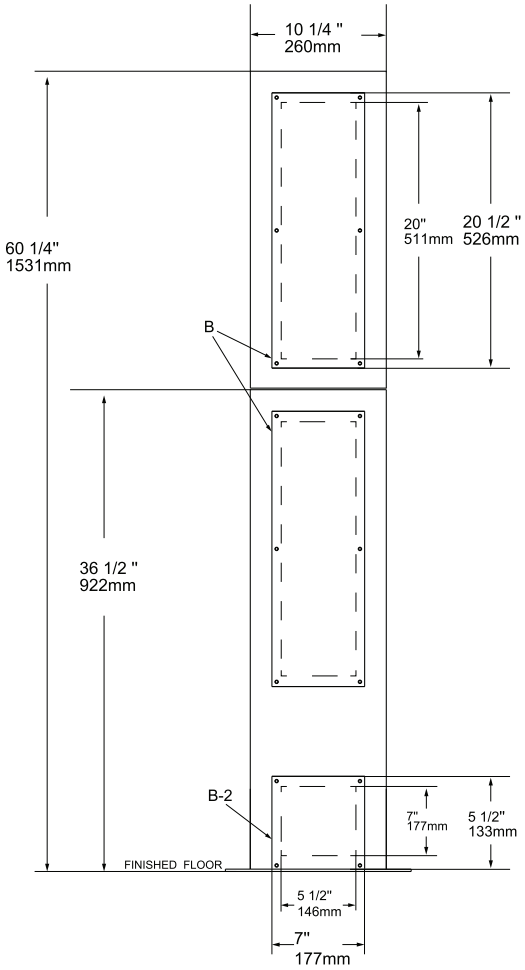

LEGEND:

A = 3/8" O.D. UNPLATED COPPER TUBE CONNECT - SHUT-OFF VALVE BY OTHERS
B = ACESS PANEL (7" X 20")
C = REMOVABLE BOTTOM COVER

• See Page 10 for Draining and Winterization
• Actual product configuration may vary based on model ordered.

INSTALLATION

- It is recommended that 2 or more people install this unit.
- This bottle filler must be mounted on a solid, flat surface with adequate strength (concrete pad recommended) capable of supporting 400 lbs.
- Locate and install plumbing through ground as required. Refer to Rough-In Guide (page 4) for proper location and correct plumbing.
- Install a drainable shut-off valve (not included) if in a freezable environment.
- Installation of a trap on the water drain line may be necessary; check local plumbing codes.

WARNING: The bottle filler is rated for inlet water pressure of 20-105 PSI. A pressure reducing regulator should be used if the inlet water supply exceeds 105 PSI. Any damage caused by reason of connecting this product to supply line pressure higher than 105 PSI will void warranty.

1. REMOVE ACCESS PANELS

To gain access to the drain and water line connections, remove the access panels using the provided torx key wrench (H1) or torx drill bit (H2) to remove all (16) M6 x 10 flat-head anti-theft screws on back side of the bottle filler and pedestal:

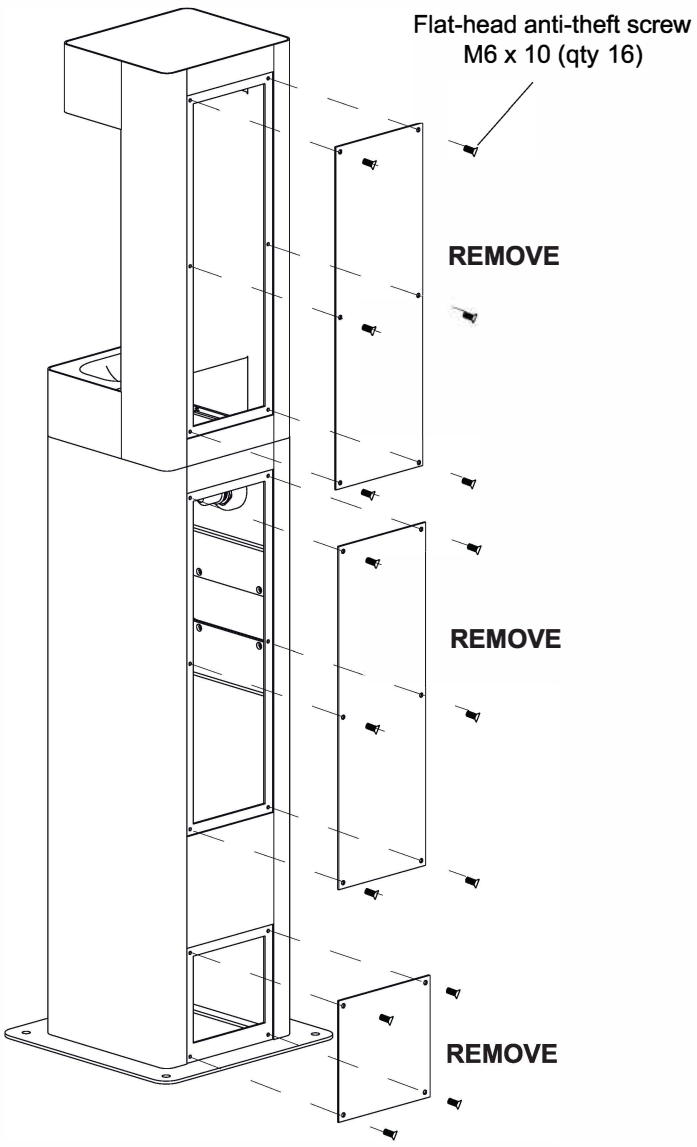

Patent Pending

2. MOUNT PEDESTAL TO GROUND

- Locate and install plumbing through ground as required. Refer to Rough-In Guide (page 4) for proper location and correct plumbing.
- This unit is designed to be installed on the surface of an existing or new concrete slab, capable of supporting 400 lbs.

Position bottle filler base over plumbing and secure to ground using provided anchor kit (H3) mounting hardware (x4).



(H3) Anchor kit consists of:

- (4) M10 Nuts
- (4) M10 Lock Washers
- (4) M10 Standard Washers
- (4) M10 Anchors

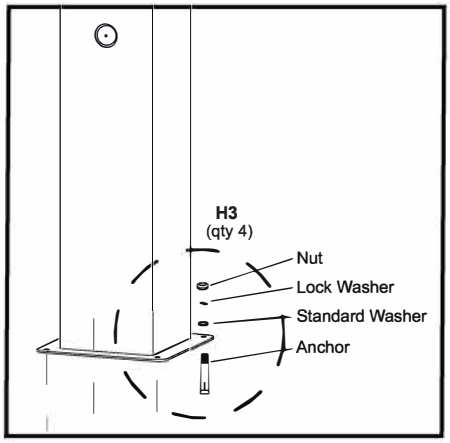

WATER INLET LINE CONNECTION BREAKDOWN:

- Install a shut-off valve (not included) on the water supply.
- All other internal water lines are preinstalled; see below illustration for reference.
- All water connections and drains must comply with local codes.

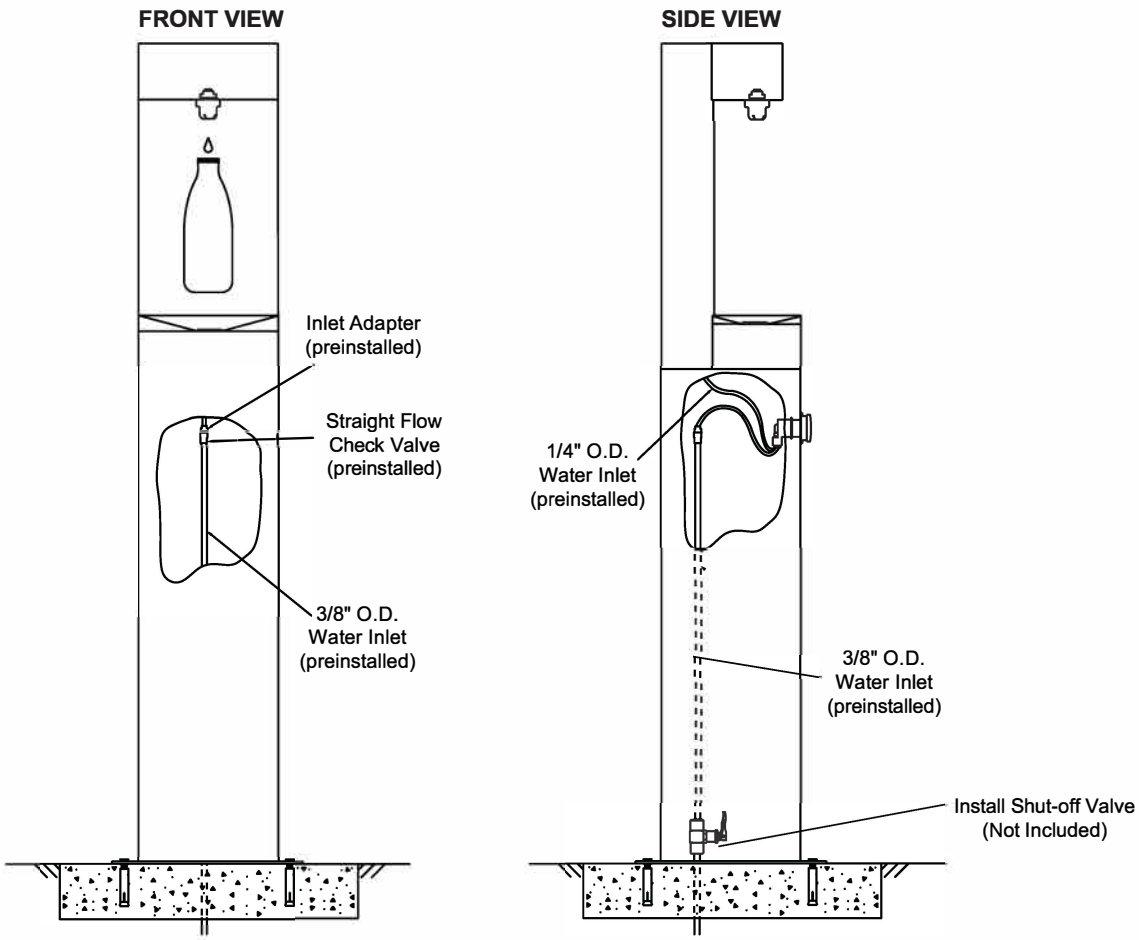

Patent Pending

Outdoor Pedestal Bottle Filling Station

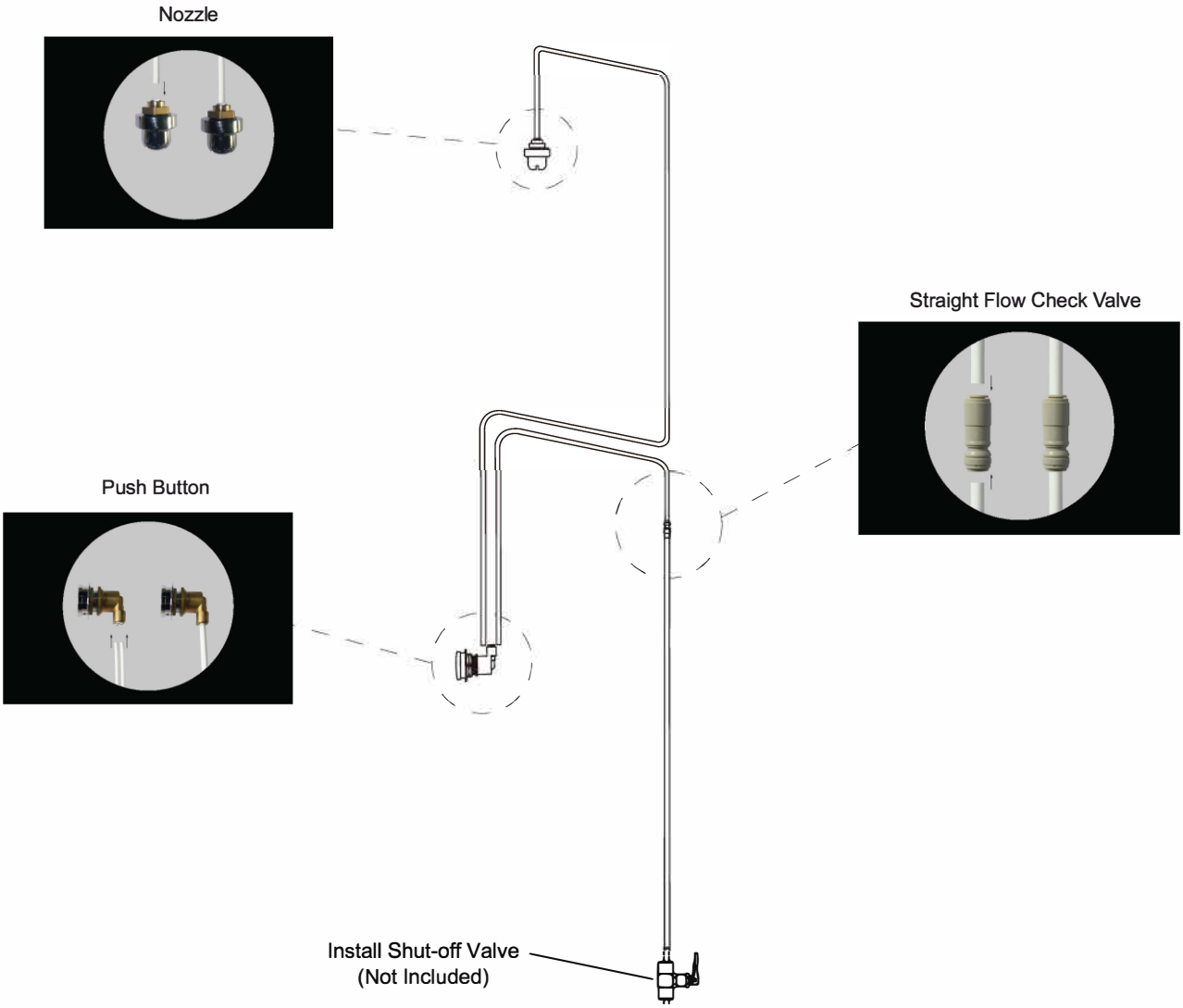

P4: Straight Flow Check Valve:

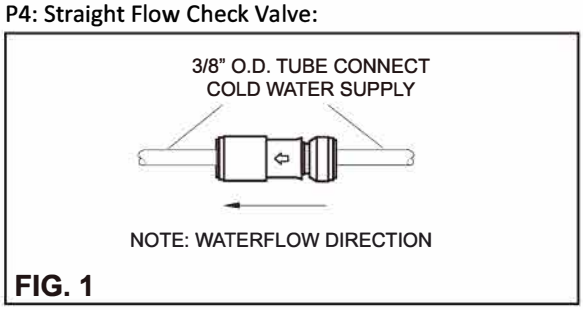

FIG. 1

All Water Inlet Connections:

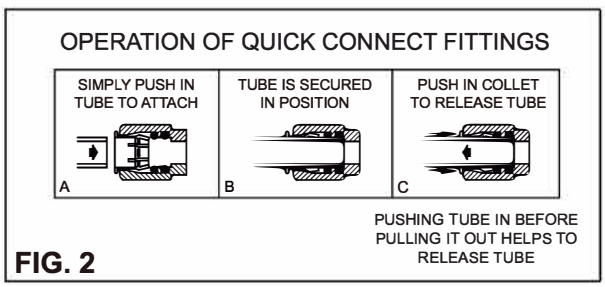

FIG. 2

- If bottle filler station is being installed in areas where cold temperatures may occur, all water inlet lines are preinstalled with pipe insulation to help prevent freezing.
- Installation of a trap on the water drain line may be necessary; check local codes. Always remove trap before winterization draining.

CAUTION: Before freezing temperatures occur, see Draining and Winterization section of this manual (page 10) for proper preparation.

Patent Pending

WATER DRAIN LINE CONNECTION BREAKDOWN:

- Install a shut-off valve (not included) on the water supply.
- All other internal drain lines are preinstalled; see below illustration for reference.
- All water connections and drains must comply with local codes.
- Installation of a trap on the water drain line may be necessary; check local codes.

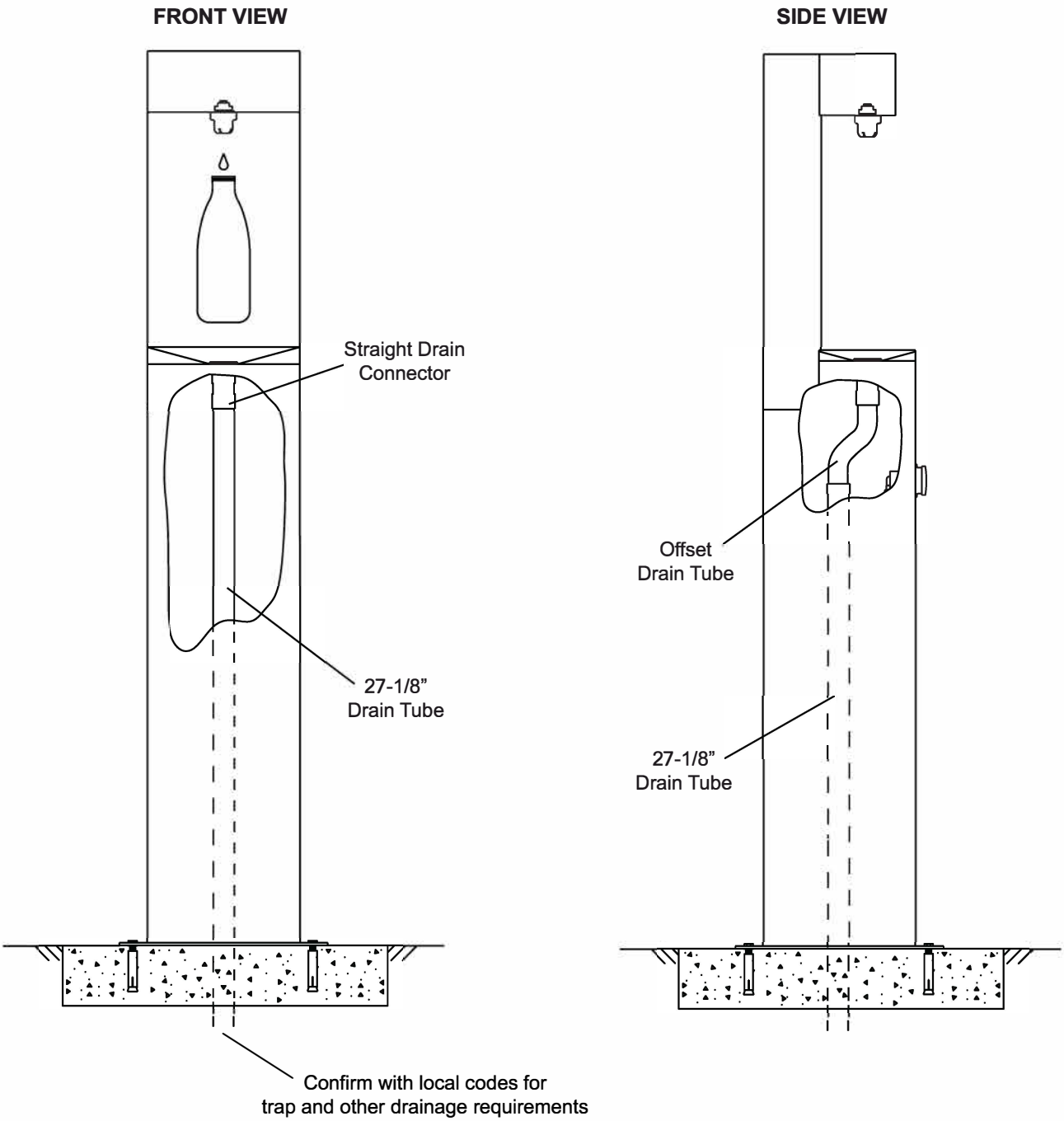

Patent Pending



Drain Connector contains quick connections that attaches the Offset Drain Tube to the Bottle Filler Drain

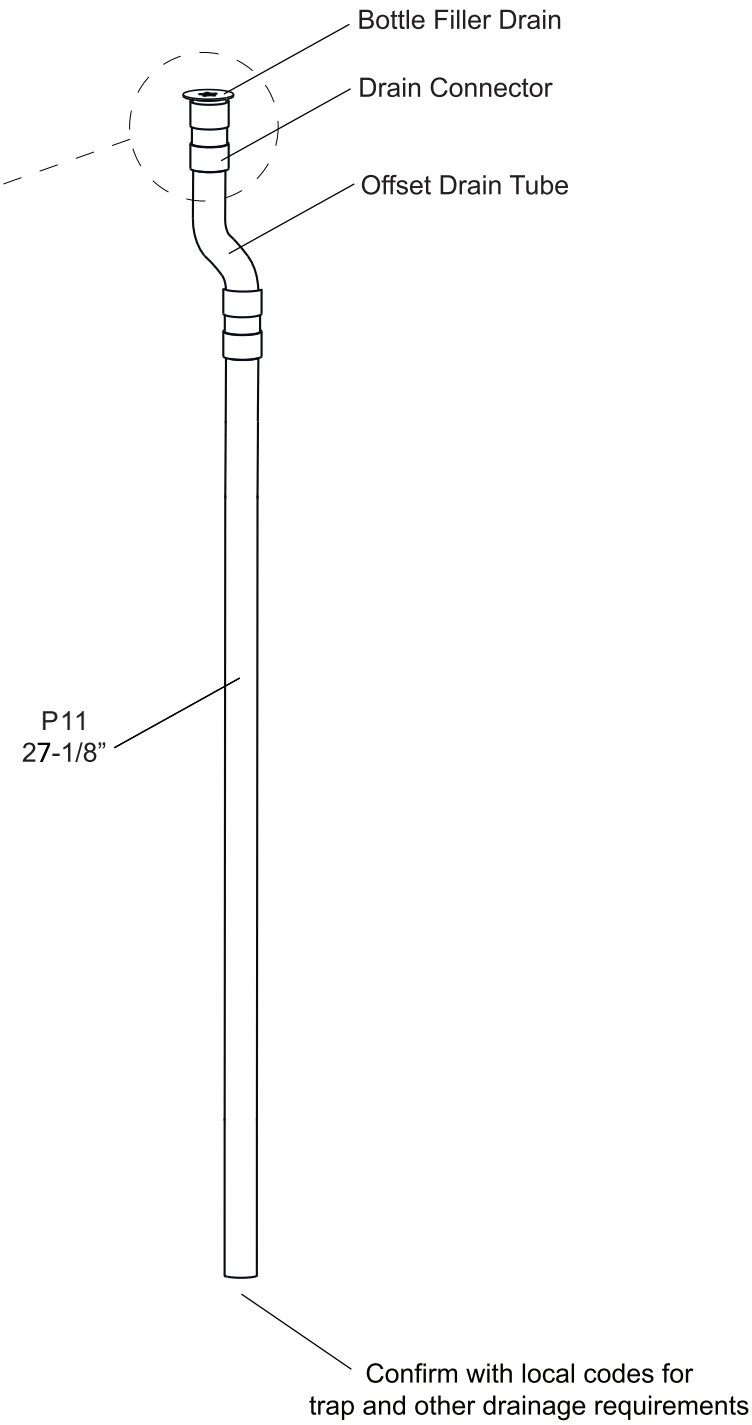

Note: Turn on water supply and check all connections for leaks and proper operation.

Reinstall all (3) access panels using the (16) M6 x 10 flat-head anti-theft screws preciously removed from the bottle filler.

WARNING: Flush all water supply lines thoroughly before initial use.

Patent Pending

START-UP

Initial water flow may have sputter due to air in the water lines; this will be eliminated once air is purged from all water lines. Press and hold the push button until a steady water stream is achieved.

STREAM HEIGHT ADJUSTMENT

To adjust the water stream pressure, insert a small flathead screwdriver through the access hole in the center of the push button and turn the adjustment screw. Turn clockwise to increase the stream pressure and counterclockwise to decrease the stream pressure.

CAUTION: The bottle filler is rated for inlet water pressure of 20-105 PSI. A pressure reducing regulator should be used if the inlet water supply exceeds 105 PSI. Any damage caused by reason of connecting this product to supply line pressures lower than 20 PSI or higher than 105 PSI will void warranty.

DRAINING AND WINTERIZATION

- Before freezing temperatures occur, turn off the water at the shut-off valve, disconnect the water supply line tubing and blow out lines. Press down on push button to release any air pressure that may remain in the lines.
- Remove trap before winterization draining.
- DO NOT allow water lines to freeze. Cracked or broken components due to freezing are not covered by warranty.

Patent Pending