GLOBAL™ INDUSTRIAL
We can supply that.®

User's manual	Manual del usuario	Manuel de l'utilisateur
Customer Service US: 1-800-645-2986	**Servicio de atención al Cliente US: 1-800-645-2986**	**Service à la clientèle Canada: 888-645-2986**

Wall-Mounted Steel Pegboard

Models: 293671, 293672

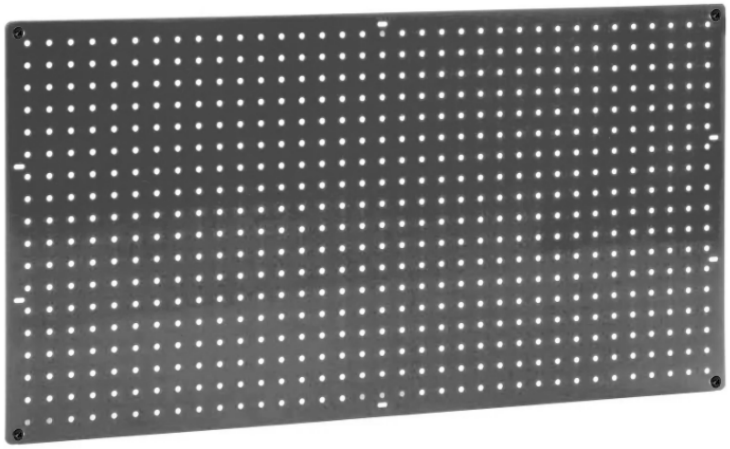

PARTS LIST

Ref	293671 QTY	293672 QTY	Description	Graphic
1	1	1	36" x 19" Steel Pegboard Panel	
2	0	1	19" x 19" Steel Pegboard Panel	
H1	4	8	Self-Tapping Screw	
H2	4	8	Plain Washer	
H3	4	8	Bushing	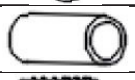
H4	4	8	Expansion Casing	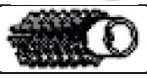

Tools Required:

- Pencil, marker, or other writing utensil
- Electric drill with #2 Phillips head screwdriver attachment
- 1/4" drill bit
- Level
- Chalk line (recommended)

Warning:

- This product requires at least two people to install.
- Always wear safety glasses, hearing protection, and other personal protective equipment (PPE) when using power tools.
- Do not climb, step, or hang on the pegboard and/or hooks on the pegboard.
- Do not place loads on the pegboard and hooks that exceed their weight capacity.

Wall-Mounted Pegboard

Single Panel - 293671

1

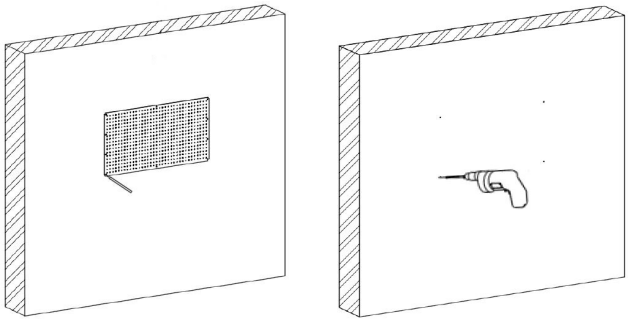

Have one person hold the pegboard in place against the wall in the desired mounting location.Have the other person mark the corner holes of each pegboard panel on the wall with a pencil.

2

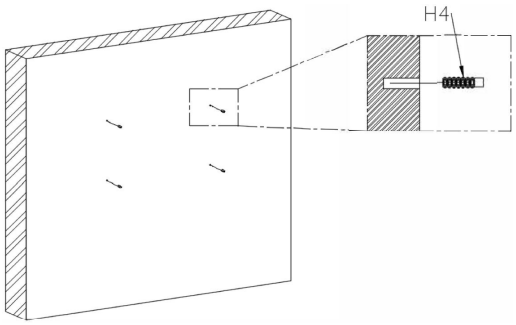

3

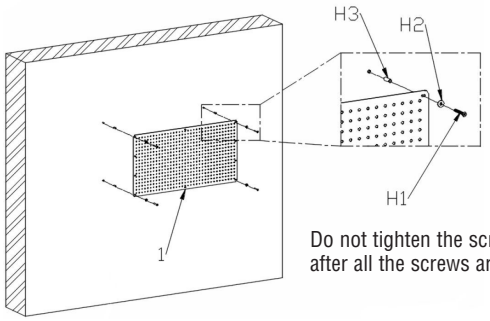

Do not tighten the screws until after all the screws are in place.

4

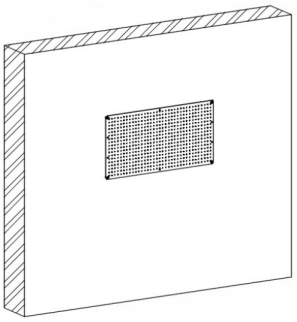

Tighten the screws once all the screws are in place.

Extended Panel - 293672

1

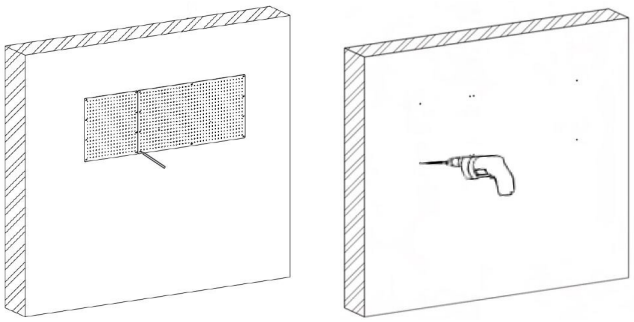

Have one person hold the pegboard in place against the wall in the desired mounting location.Have the other person mark the corner holes of each pegboard panel on the wall with a pencil.

2

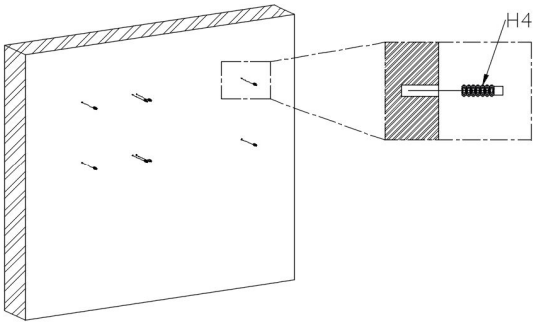

3

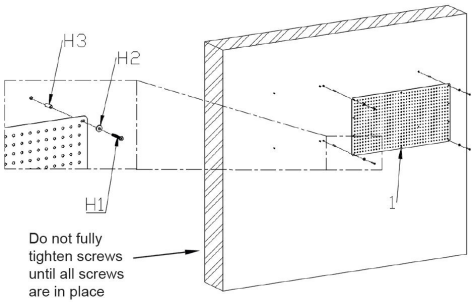

Do not fully tighten screws until all screws are in place

4

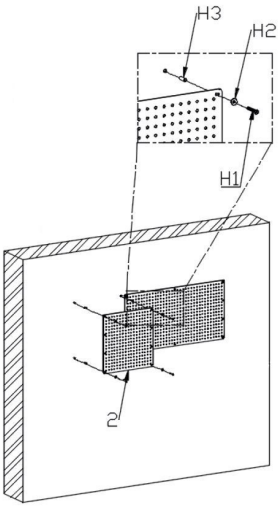

5

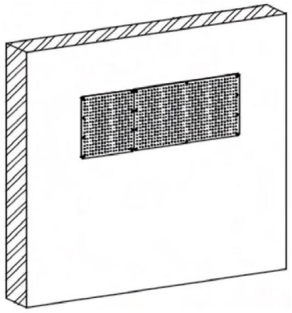

Tighten the screws once all the screws are in place.