CONTENTS		
REF.	QTY.	DESCRIPTION
1	2	UPRIGHT FRAME
2	4	BEAM
3		WIRE DECKING

FS Workspace
Business • Education • Facility Supplies
FilingSupplies.com

FilingSupplies.com | 800-810-3453

PALLET RACK

STARTER UNIT

1

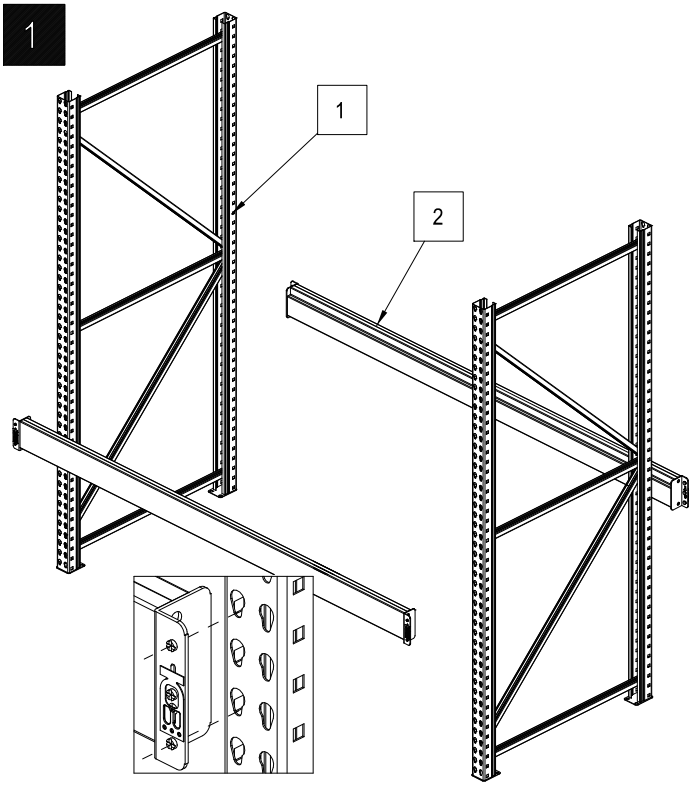

2

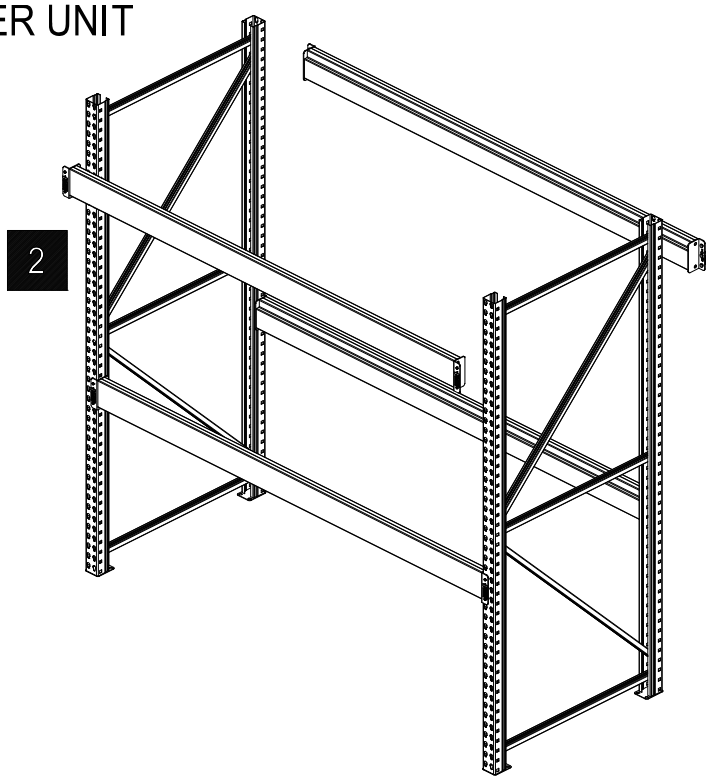

3

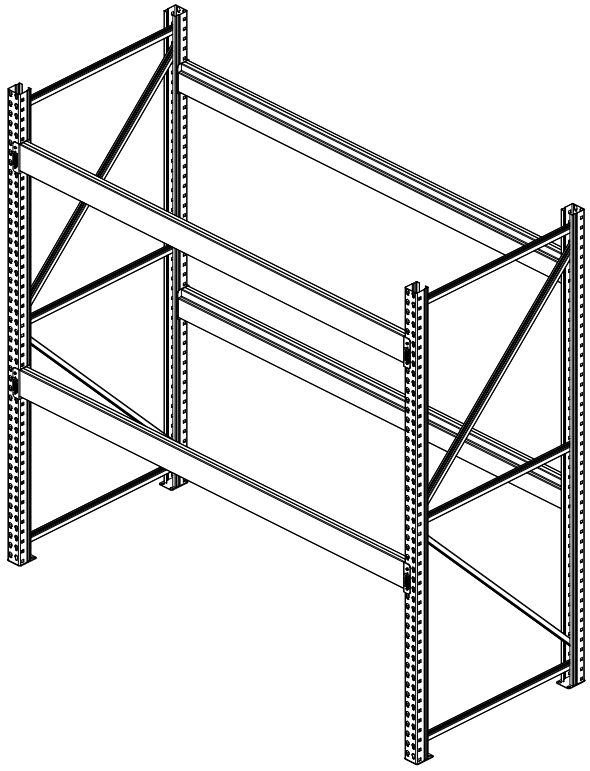

4

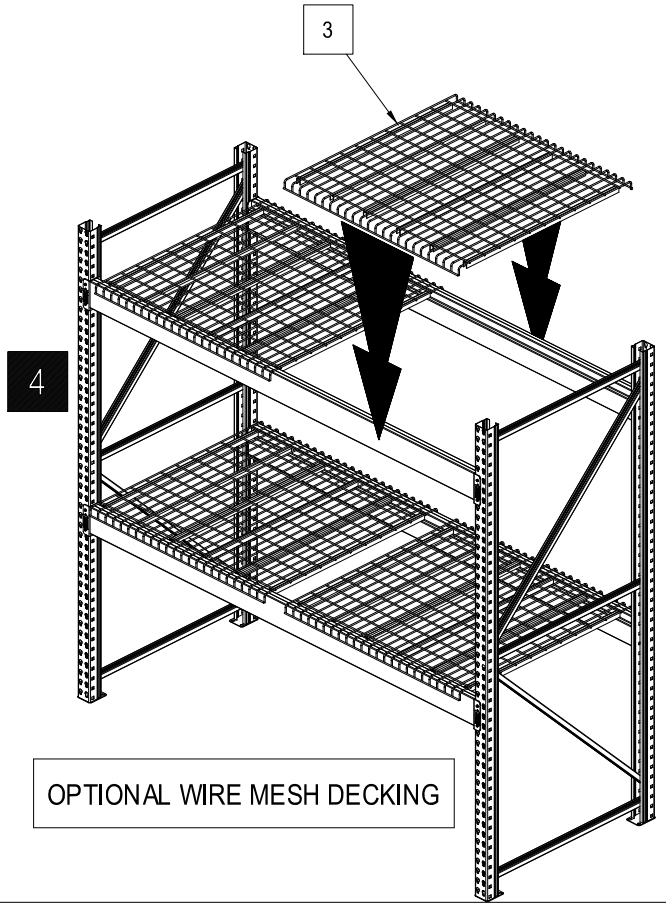

OPTIONAL WIRE MESH DECKING

PALLET RACK

ADD-ON UNIT

CONTENTS		
REF.	QTY.	DESCRIPTION
1	1	UPRIGHT FRAME
2	4	BEAM
3		WIRE DECKING

1

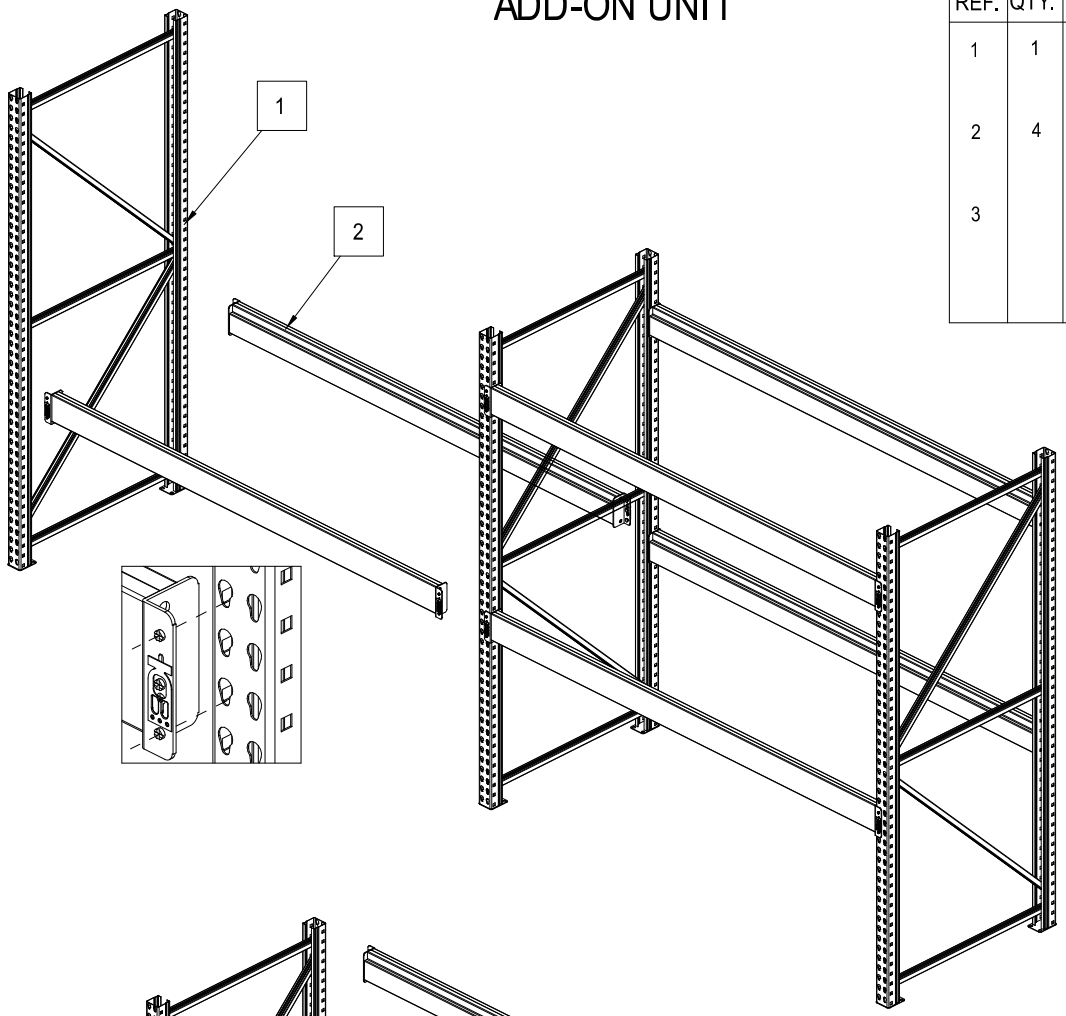

2

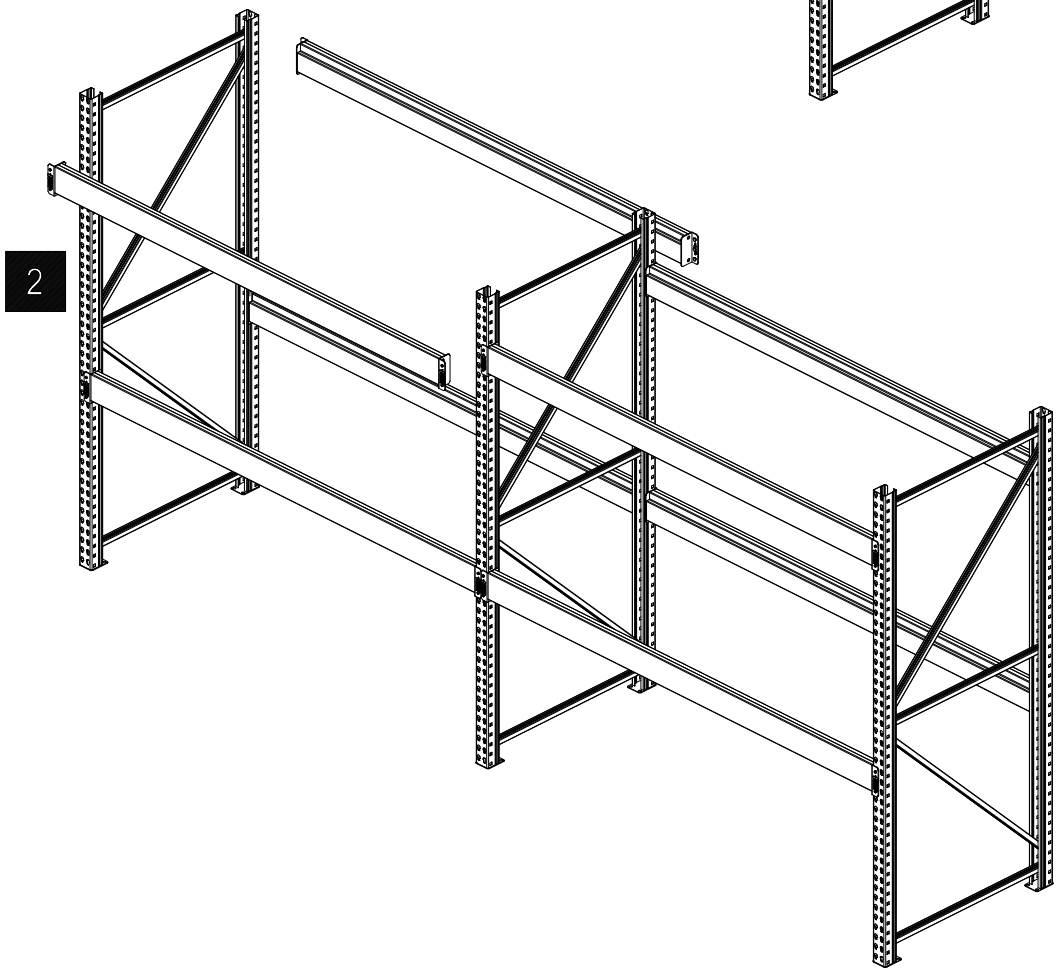

3

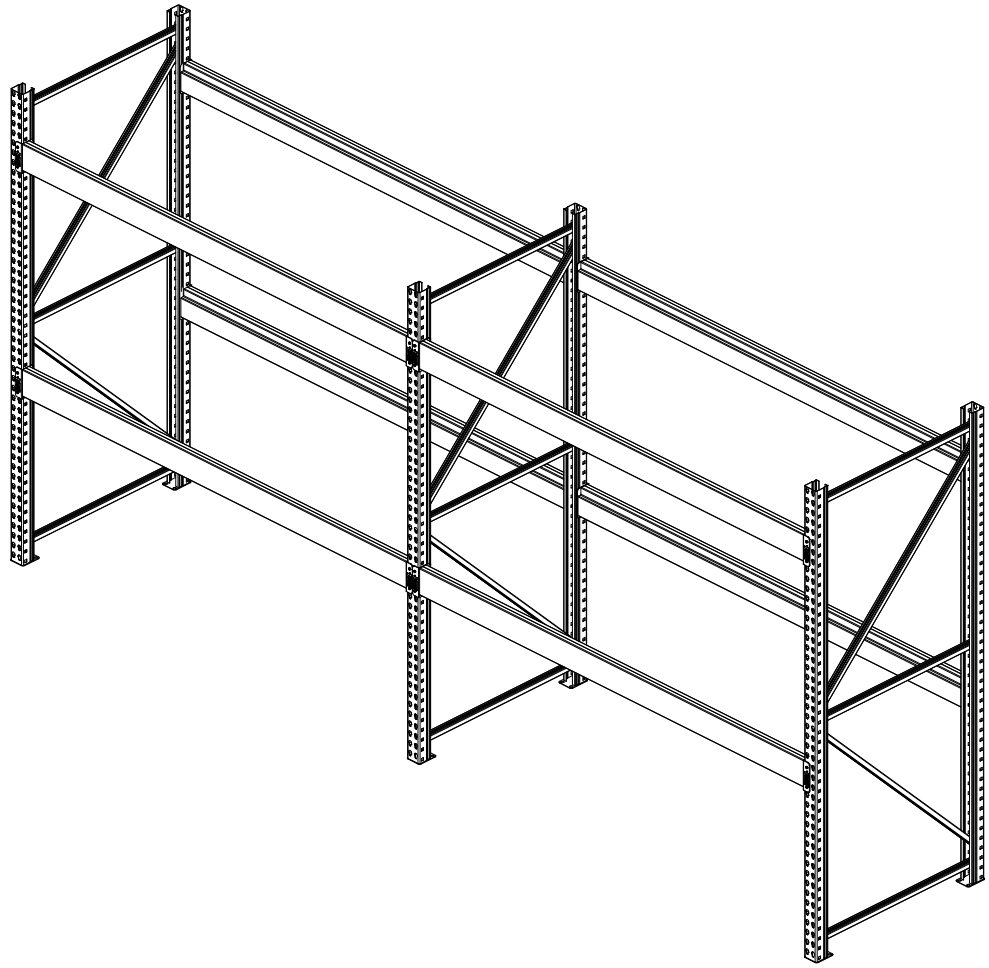

4

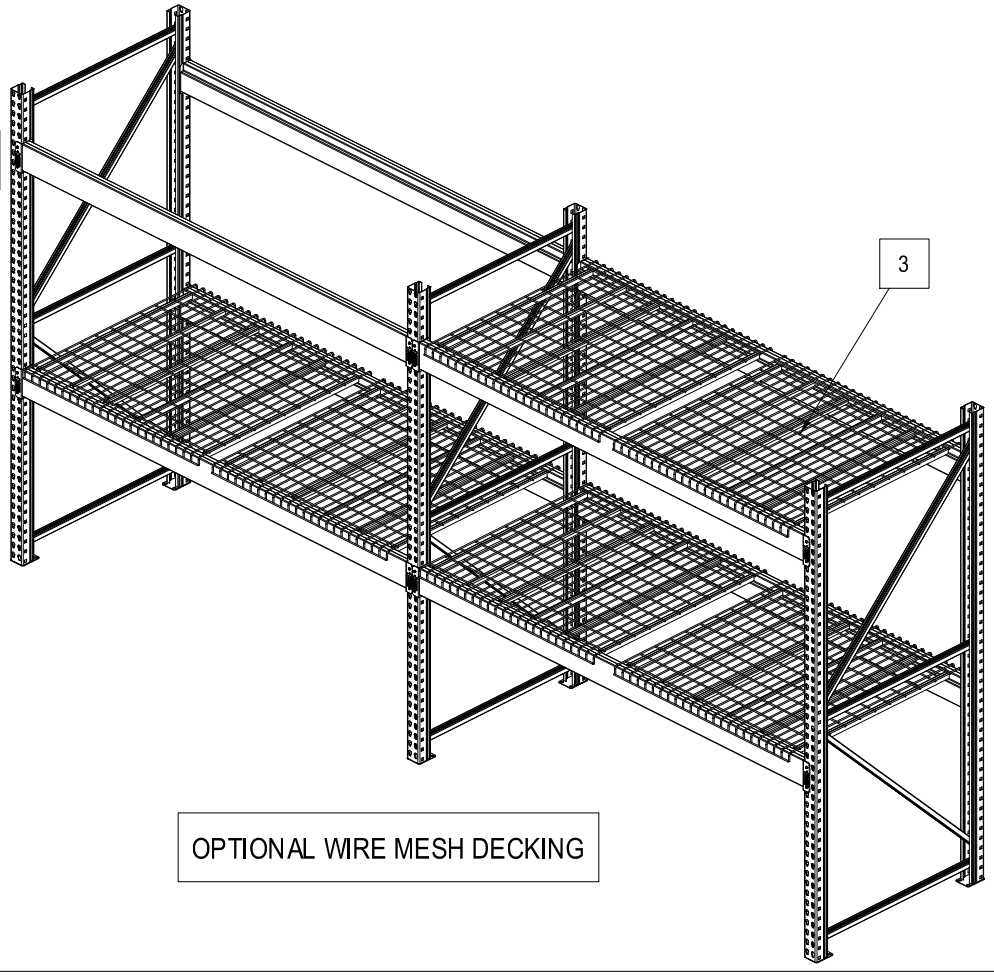

OPTIONAL WIRE MESH DECKING