## INCLUDED ASSEMBLY TOOLS

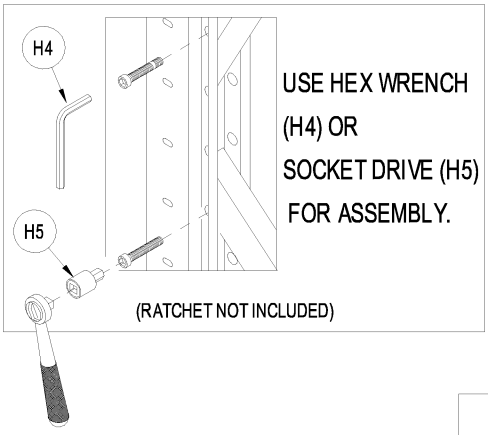


FS Workspace
Business • Education • Facility Supplies
FilingSupplies.com

FilingSupplies.com | 800-810-3453

EXTRA HIGH CAPACITY BULK RACK

# ASSEMBLY INSTRUCTION

1. WEAR GLOVES TO PREVENT HAND INJURY.
2. FINGER TIGHTEN ALL BOLTS.
3. FULLY TIGHTEN ALL BOLTS AFTER ALL BRACES ARE ASSEMBLED.

## HARDWARE

CONTENTS

| REF. | QTY. | DESCRIPTION |
|---|---|---|
| 1 | 4 | VERTICAL UPRIGHT |
| 2 | 2 | HORIZONTAL BRACE |
| 3 | 2 | ANGULAR BRACE |
| 4 | 6 | HORIZONTAL BEAM |
| 5 | | DECK SUPPORT |
| H1 | 16 | BOLT |
| H2 | 16 | NUT |
| H3 | 12 | KEEPER PIN |
| | 1 | HEX WRENCH |
| | 1 | 1/4" DRIVE |

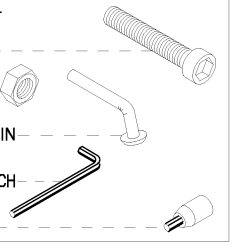

## 18"x72" FRAME

1

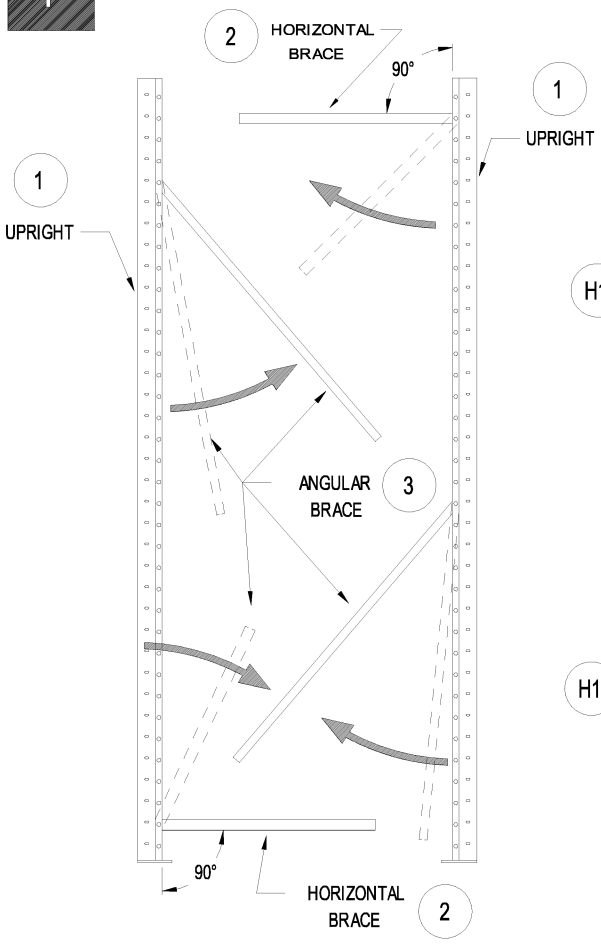


2

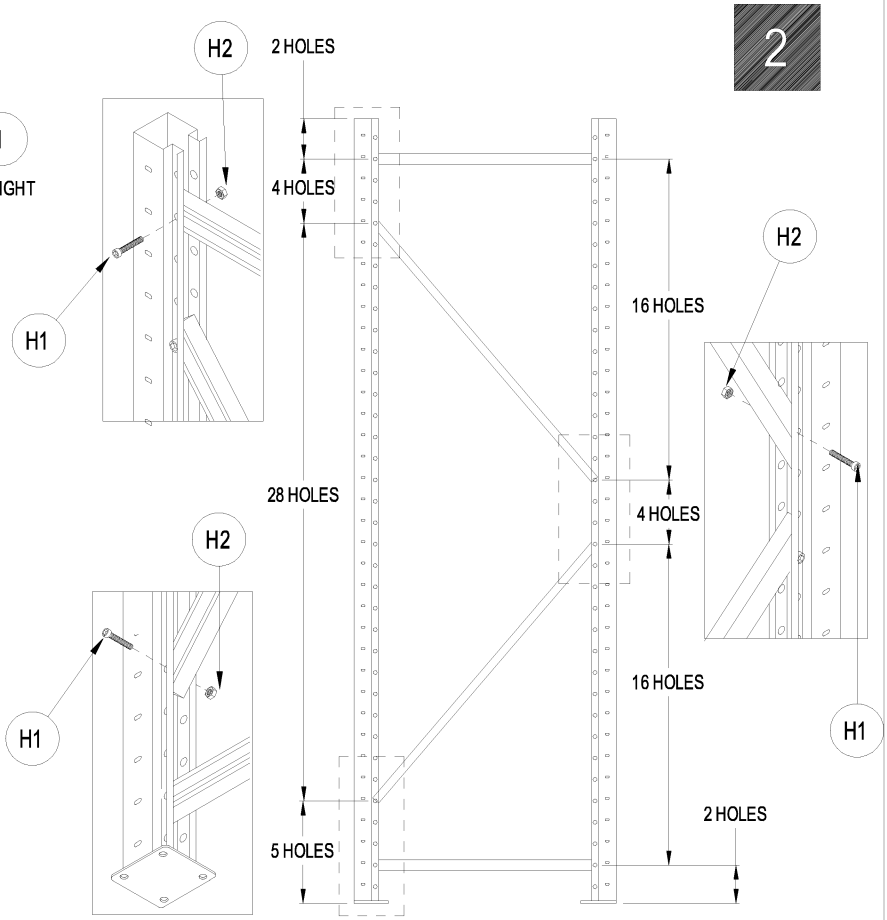


A. LAY UPRIGHTS FACING EACH OTHER ON THE FLOOR.

B. SWING OUT UPPER AND LOWER HORIZONTAL SUPPORT BRACES AND BOLT INTO PLACE.

C. LOCATE AND BOLT ANGULAR BRACES INTO PLACE.

OPTIONAL
CASTER

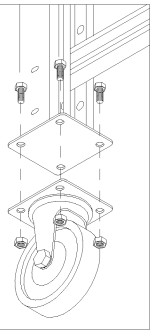

## INCLUDED ASSEMBLY TOOLS

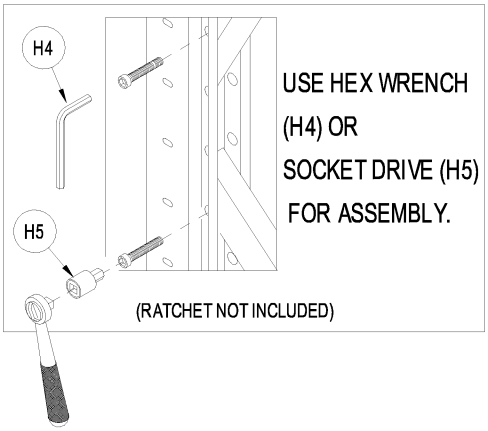


FS Workspace
Business • Education • Facility Supplies
FilingSupplies.com

FilingSupplies.com | 800-810-3453

EXTRA HIGH CAPACITY BULK RACK

# ASSEMBLY INSTRUCTION

1. WEAR GLOVES TO PREVENT HAND INJURY.
2. FINGER TIGHTEN ALL BOLTS.
3. FULLY TIGHTEN ALL BOLTS AFTER ALL BRACES ARE ASSEMBLED.

## HARDWARE

CONTENTS

| REF. | QTY. | DESCRIPTION |
|---|---|---|
| 1 | 4 | VERTICAL UPRIGHT |
| 2 | 2 | HORIZONTAL BRACE |
| 3 | 2 | ANGULAR BRACE |
| 4 | 6 | HORIZONTAL BEAM |
| 5 | | DECK SUPPORT |
| H1 | 16 | BOLT |
| H2 | 16 | NUT |
| H3 | 12 | KEEPER PIN |
| H4 | 1 | HEX WRENCH |
| H5 | 1 | 1/4" DRIVE |

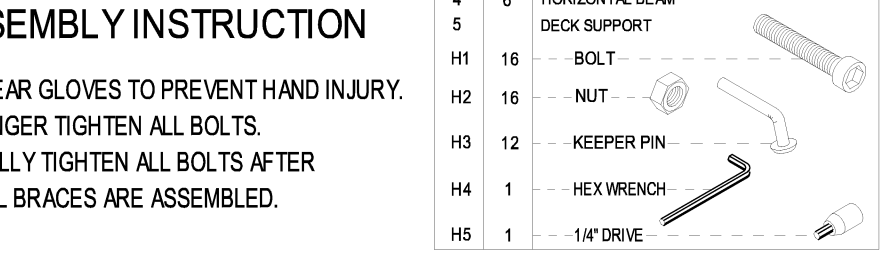

# 72" FRAME

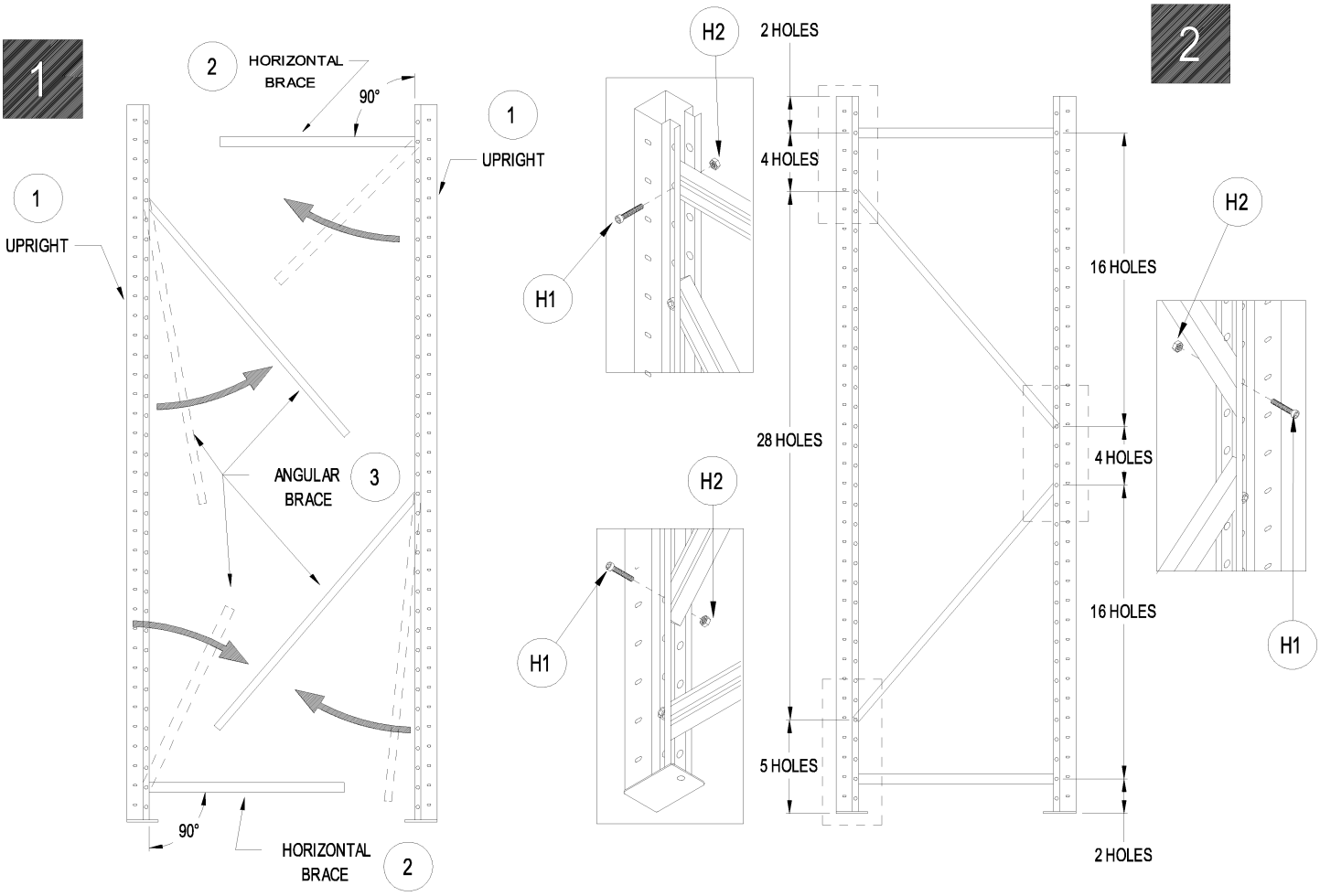


A. LAY UPRIGHTS FACING EACH OTHER ON THE FLOOR.

B. SWING OUT UPPER AND LOWER HORIZONTAL SUPPORT BRACES AND BOLT INTO PLACE.

C. LOCATE AND BOLT ANGULAR BRACES INTO PLACE.

## INCLUDED ASSEMBLY TOOLS

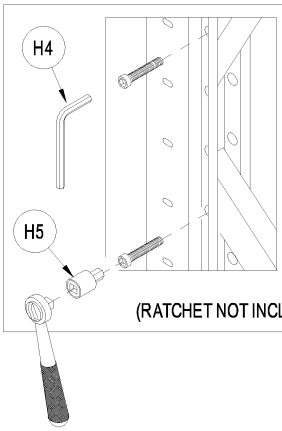


USE HEX WRENCH (H4) OR SOCKET DRIVE (H5) FOR ASSEMBLY.

(RATCHET NOT INCLUDED)

FS Workspace
Business • Education • Facility Supplies
FilingSupplies.com

FilingSupplies.com | 800-810-3453

EXTRA HIGH CAPACITY BULK RACK

# ASSEMBLY INSTRUCTION

1. WEAR GLOVES TO PREVENT HAND INJURY.
2. FINGER TIGHTEN ALL BOLTS.
3. FULLY TIGHTEN ALL BOLTS AFTER ALL BRACES ARE ASSEMBLED.

## HARDWARE

CONTENTS

| REF. | QTY. | DESCRIPTION |
|---|---|---|
| 1 | 4 | VERTICAL UPRIGHT |
| 2 | 3 | HORIZONTAL BRACE |
| 3 | 2 | ANGULAR BRACE |
| 4 | 6 | HORIZONTAL BEAM |
| 5 | | DECK SUPPORT |
| H1 | 16 | BOLT |
| H2 | 16 | NUT |
| H3 | 12 | KEEPER PIN |
| H4 | 1 | HEX WRENCH |
| H5 | 1 | 1/4" DRIVE |

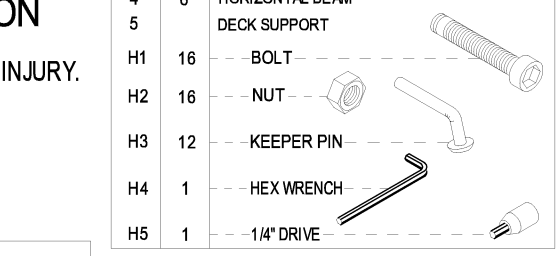

# 96" FRAME

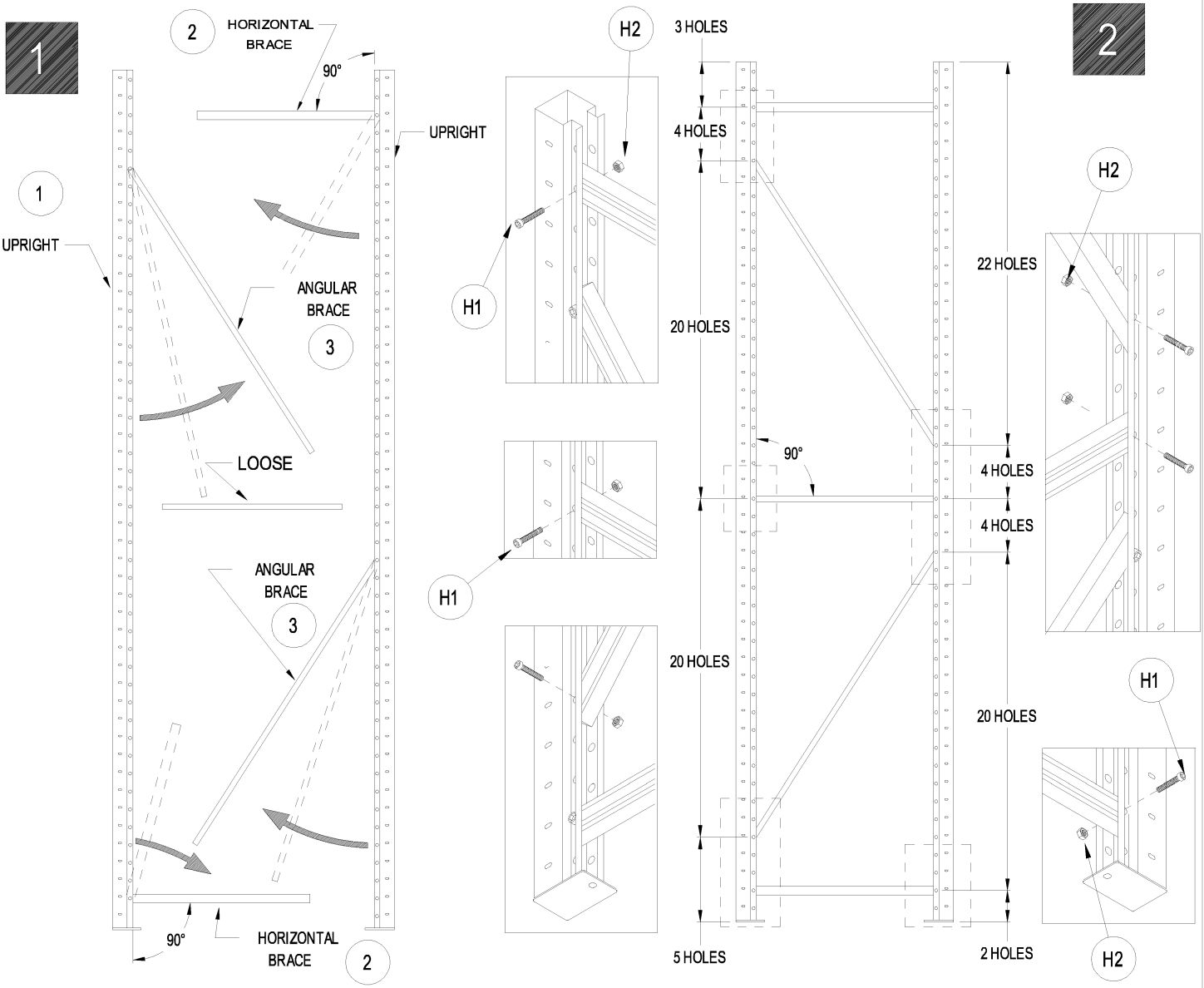


A. LAY UPRIGHTS FACING EACH OTHER ON THE FLOOR.

B. SWING OUT UPPER AND LOWER HORIZONTAL SUPPORT BRACES AND BOLT INTO PLACE.

C. LOCATE AND BOLT ANGULAR BRACES INTO PLACE.

## INCLUDED ASSEMBLY TOOLS

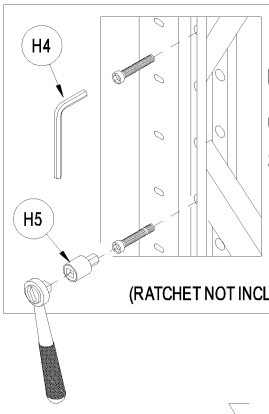


USE HEX WRENCH (H4) OR SOCKET DRIVE (H5) FOR ASSEMBLY.

(RATCHET NOT INCLUDED)

FS Workspace
Business • Education • Facility Supplies
FilingSupplies.com

FilingSupplies.com | 800-810-3453

EXTRA HIGH CAPACITY BULK RACK

# ASSEMBLY INSTRUCTION

1. WEAR GLOVES TO PREVENT HAND INJURY.
2. FINGER TIGHTEN ALL BOLTS.
3. FULLY TIGHTEN ALL BOLTS AFTER ALL BRACES ARE ASSEMBLED.

## HARDWARE

CONTENTS

| REF. | QTY. | DESCRIPTION |
|---|---|---|
| 1 | 4 | VERTICAL UPRIGHT |
| 2 | 2 | HORIZONTAL BRACE |
| 3 | 4 | ANGULAR BRACE |
| 4 | 6 | HORIZONTAL BEAM |
| 5 | | DECK SUPPORT |
| H1 | 16 | BOLT |
| H2 | 16 | NUT |
| H3 | 12 | KEEPER PIN |
| H4 | 1 | HEX WRENCH |
| H5 | 1 | 1/4" DRIVE |

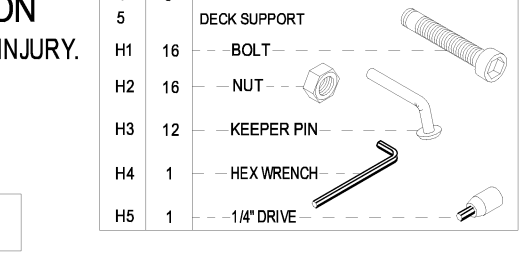

## 120" FRAME

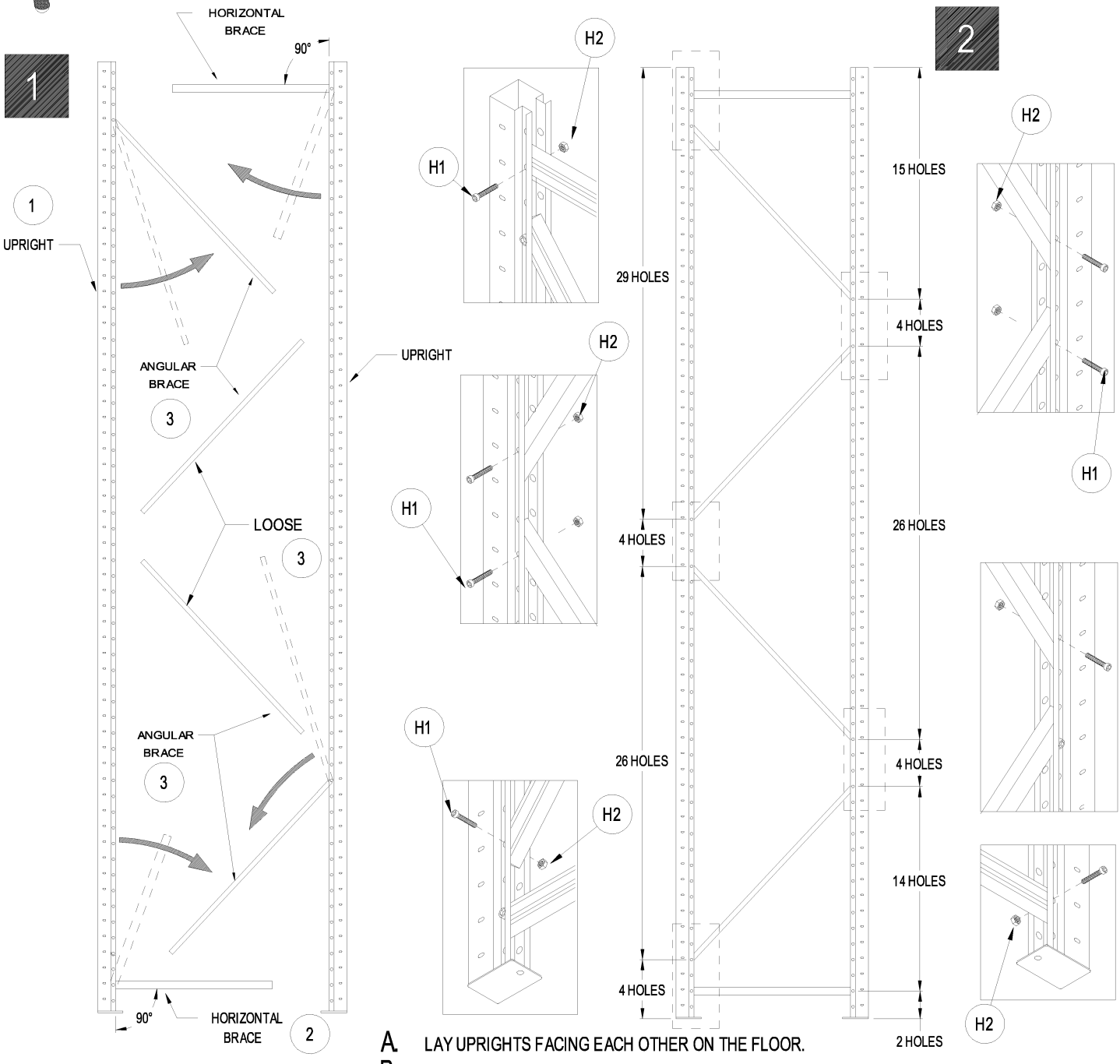


A. LAY UPRIGHTS FACING EACH OTHER ON THE FLOOR.

B. SWING OUT UPPER AND LOWER HORIZONTAL SUPPORT BRACES AND BOLT INTO PLACE.

C. LOCATE AND BOLT ANGULAR BRACES INTO PLACE.

FS Workspace
Business • Education • Facility Supplies
FilingSupplies.com

FilingSupplies.com | 800-810-3453

# EXTRA HIGH CAPACITY BULK RACK

## ASSEMBLY INSTRUCTION

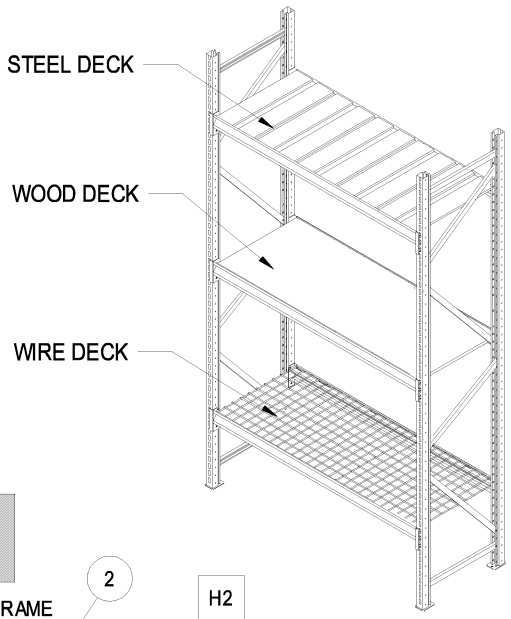


### CONTENTS

| REF. | QTY. | DESCRIPTION |
|---|---|---|
| 1 | 4 | VERTICAL UPRIGHT |
| 2 | | HORIZONTAL BRACE (72" AND 120" USE 2) ( 96" USE 3) |
| 3 | | ANGULAR BRACE( 72" AND 96" USE 2) (120" USE 4) |
| 4 | 6 | Z - BEAM |
| 5 | | DECK SUPPORT |
| H1 | | BOLT |
| H2 | | NUT |
| H3 | | KEEPER PIN |

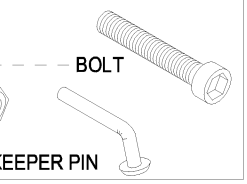

### 1 ASSEMBLE FRAME

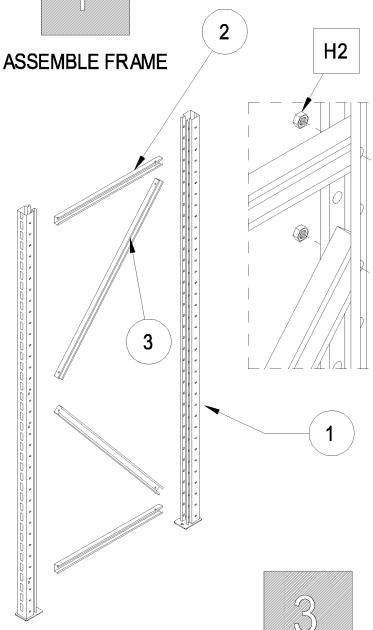


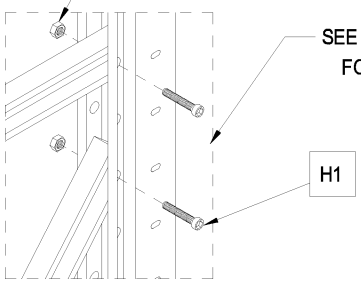


### 2 ATTACH BEAMS

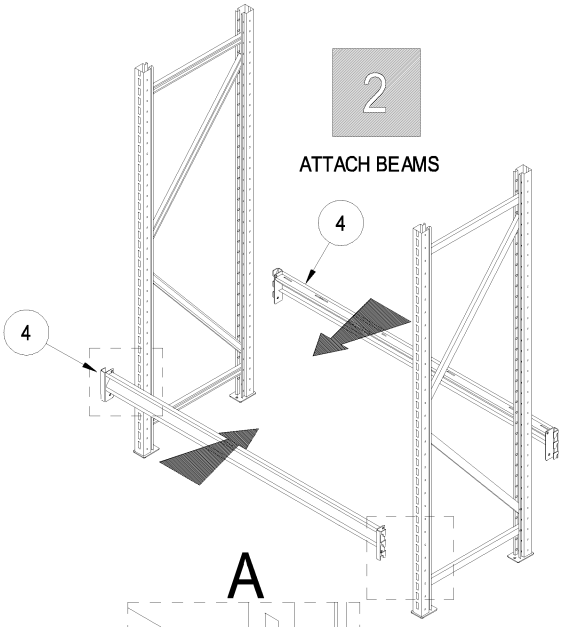


### WARNING.

1. DO NOT CLIMB ON RACK.
2. DO NOT USE RACK AS LADDER.
3. HAND LOAD ONLY.
4. DO NOT OVERLOAD.
5. KEEPER PIN MUST BE INSERTED TO STOP BEAM FROM MOVING.

### 3 INSERT KEEPER PIN

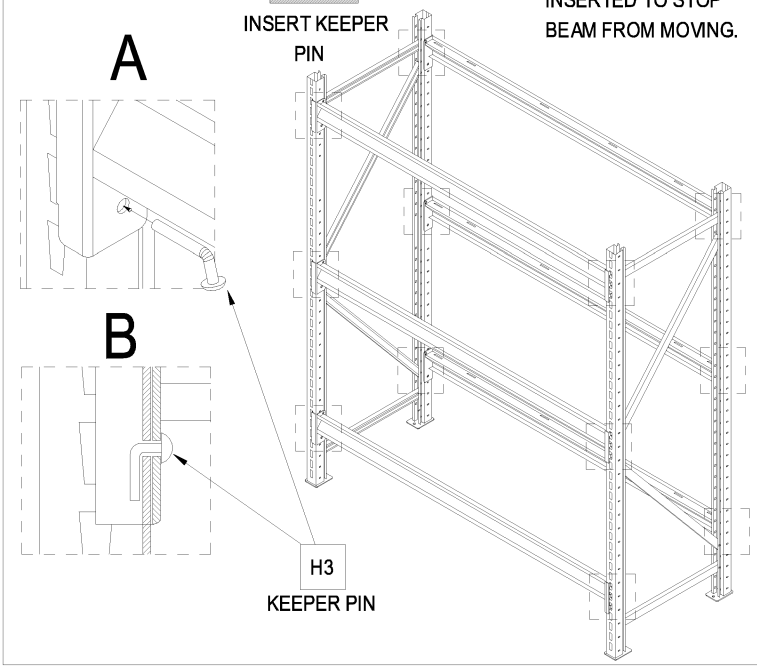


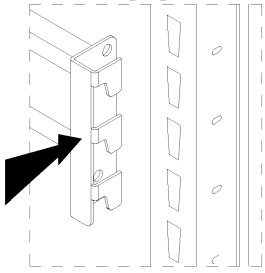


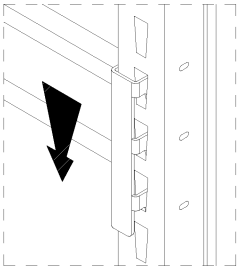

NOTE:

4

DECK SUPPORTS

FOR 24" AND 36" AND 48" DEEP UNIT
(NOT INCLUDED FOR 18" DEEP)

USE 2 ON 60" W AND 72" W
USE 3 ON 96" W

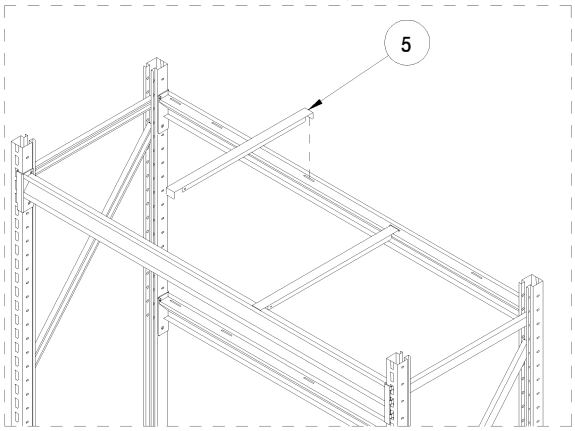


## ADD-ON UNIT

5

A

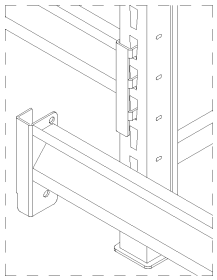

B

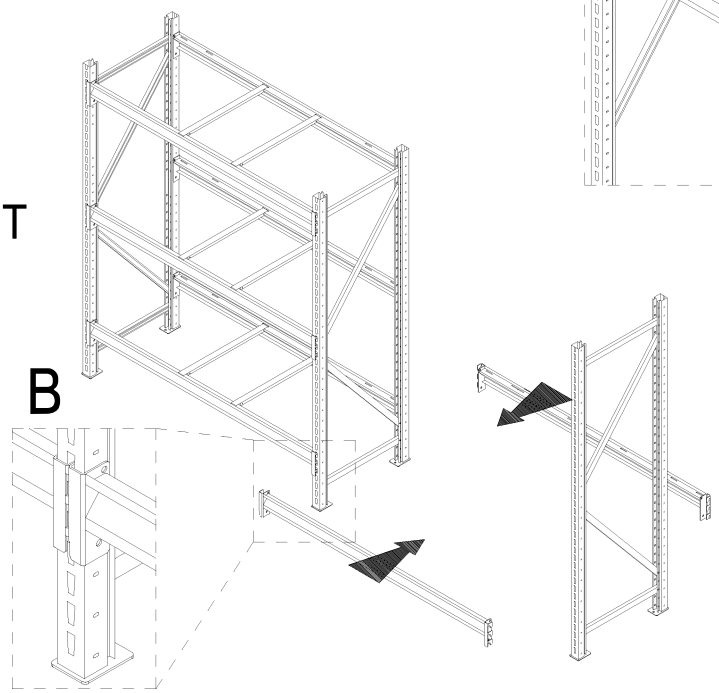

6 INSERT DECK

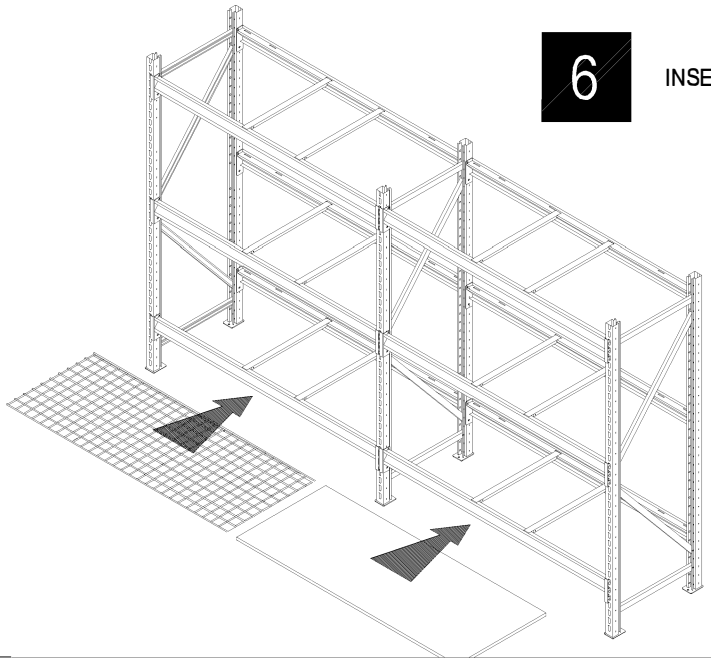

**⚠ WARNING.**

1. DO NOT CLIMB ON RACK.
2. DO NOT USE RACK AS LADDER.
3. HAND LOAD ONLY.
4. DO NOT OVERLOAD.
5. KEEPER PIN MUST BE INSERTED TO STOP BEAM FROM MOVING.

# 7

## FOR WOOD AND WIRE DECKS ONLY
## DECK SUPPORT ASSEMBLY AND POSITIONS

INSTALL DECK SUPPORTS IN CENTER
AND END POSITIONS AS ILLUSTRATED.

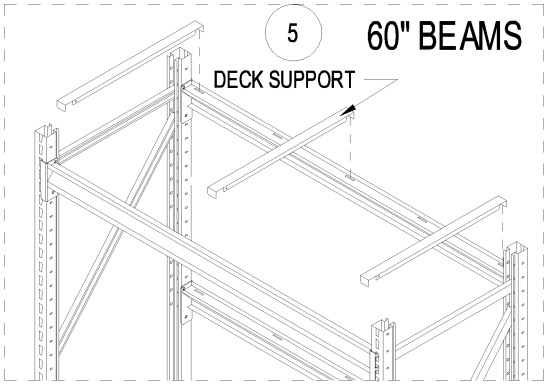


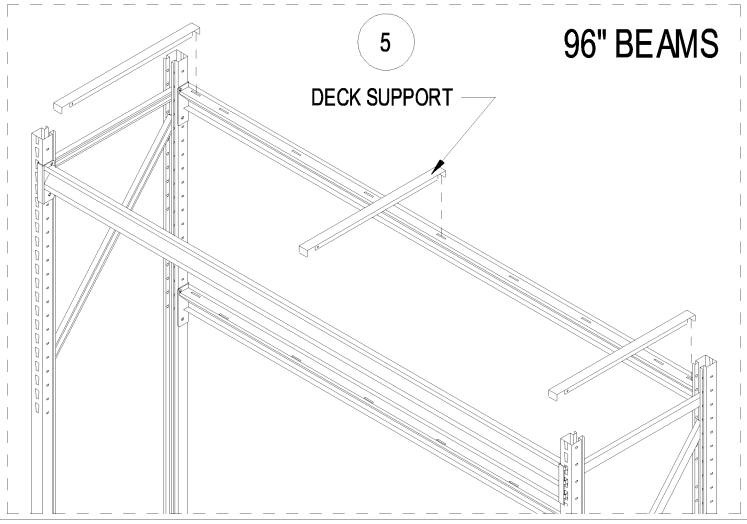


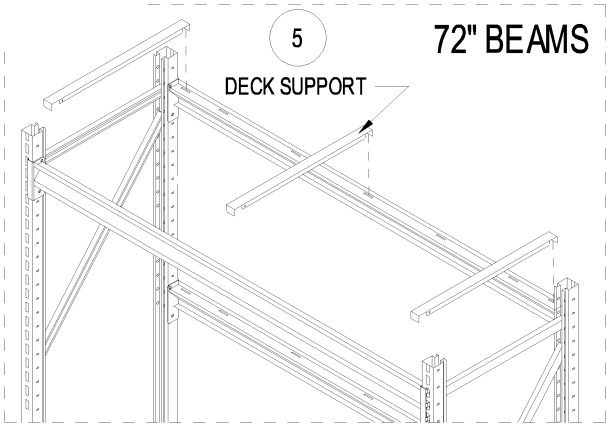


# 8

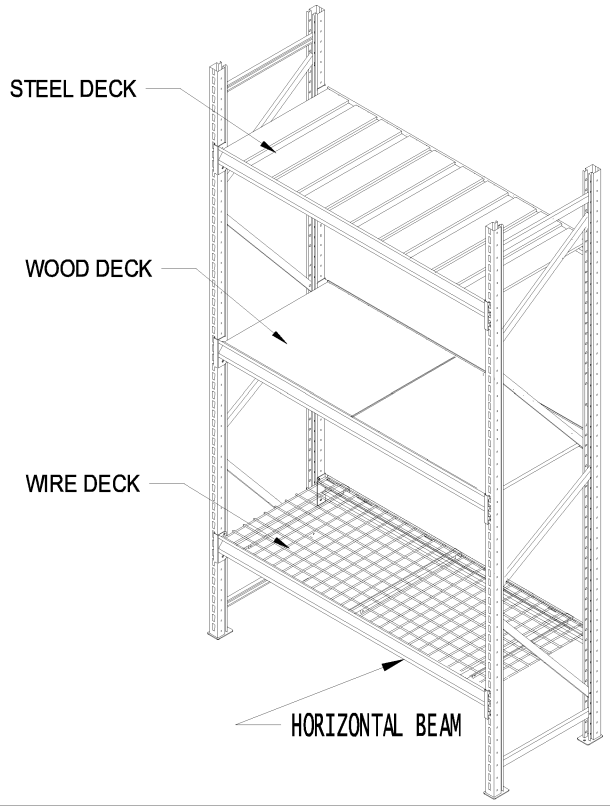


## INSTALL SHELF DECKING:

PLACE THE SHELF DECKING ONTO THE BEAMS.

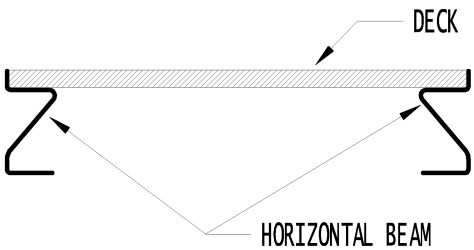

FS Workspace
Business • Education • Facility Supplies
FilingSupplies.com

FilingSupplies.com | 800-810-3453

# TIRE RACK

## ASSEMBLY INSTRUCTION

| CONTENTS | | |
|---|---|---|
| REF. | QTY. | DESCRIPTION |
| 1 | 4 | VERTICAL UPRIGHT |
| 2 | | HORIZONTAL BRACE (72" AND 120" USE 2) ( 96" USE 3) |
| 3 | | ANGULAR BRACE( 72" AND 96" USE 2) (120" USE 4) |
| 4 | 6 | Z - BEAM |
| 5 | | DECK SUPPORT |
| H1 | | BOLT |
| H2 | | NUT |
| H3 | | KEEPER PIN |

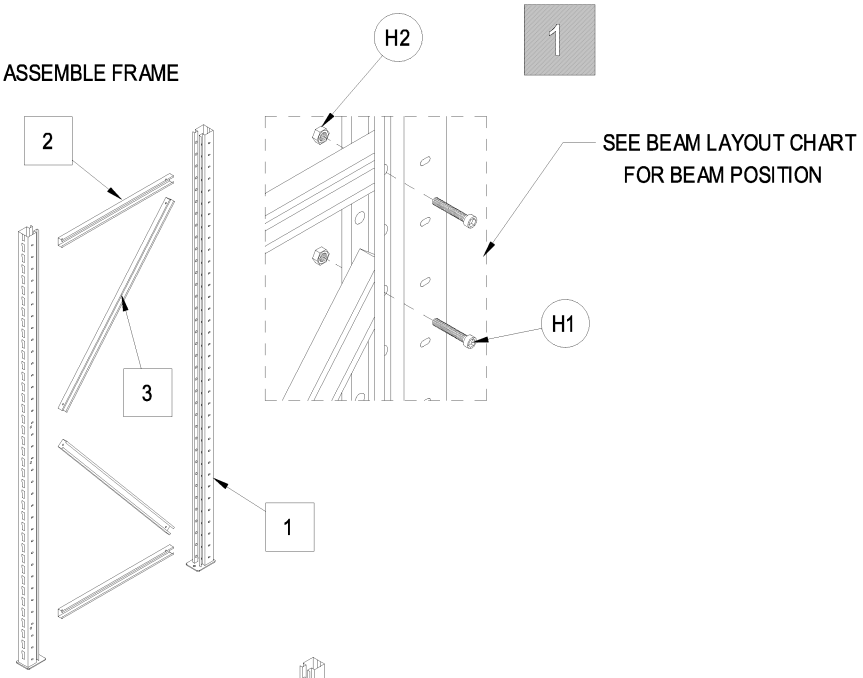


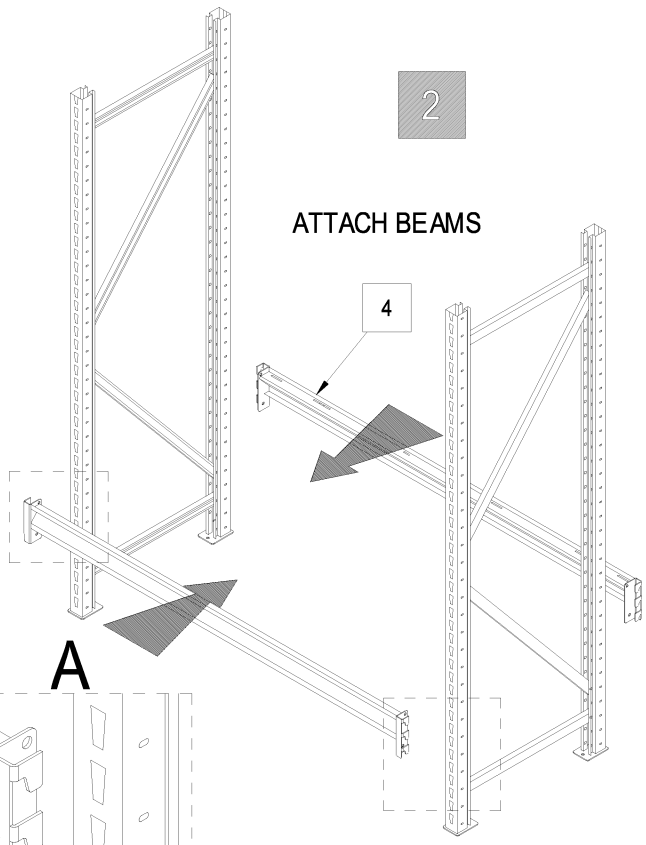


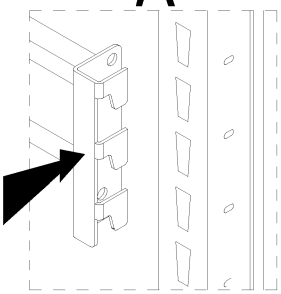


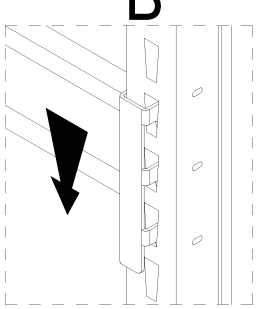


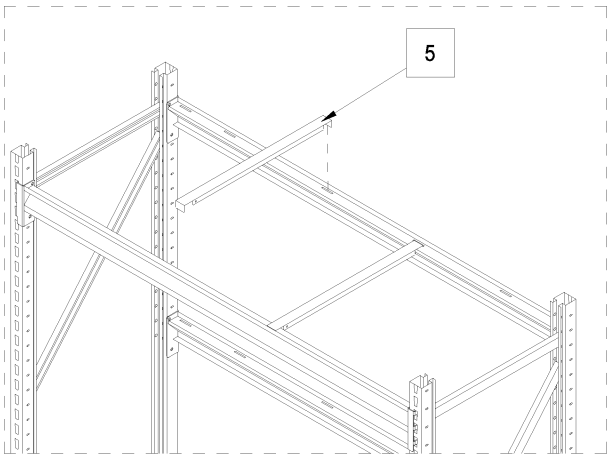


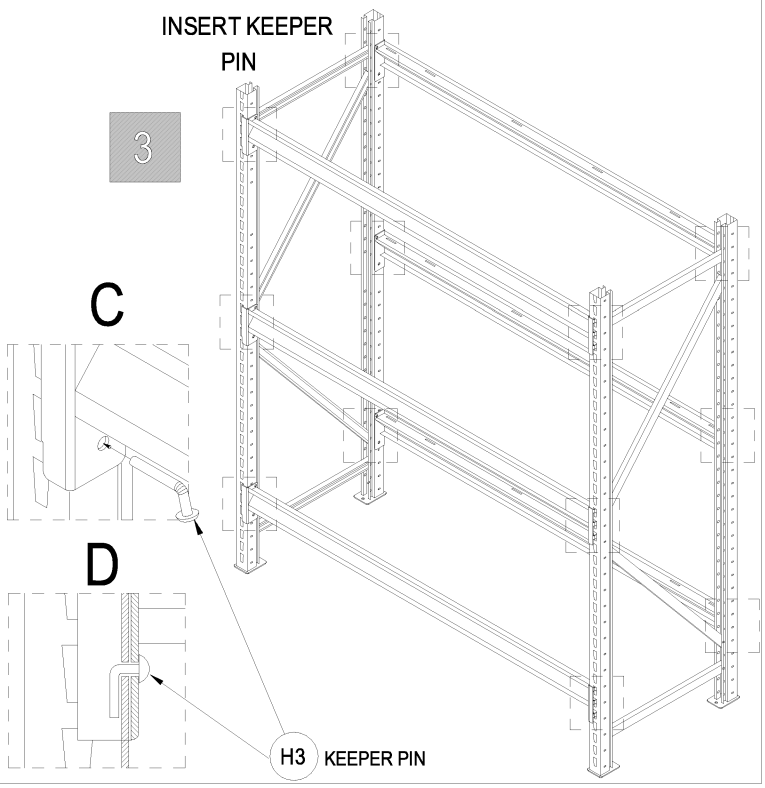

# BEAM LAYOUT CHART

**⚠ WARNING.**

1. DO NOT CLIMB ON RACK.
2. DO NOT USE RACK AS LADDER.
3. HAND LOAD ONLY.
4. DO NOT OVERLOAD.
5. KEEPER PIN MUST BE INSERTED TO STOP BEAM FROM MOVING.

## 72" FRAME

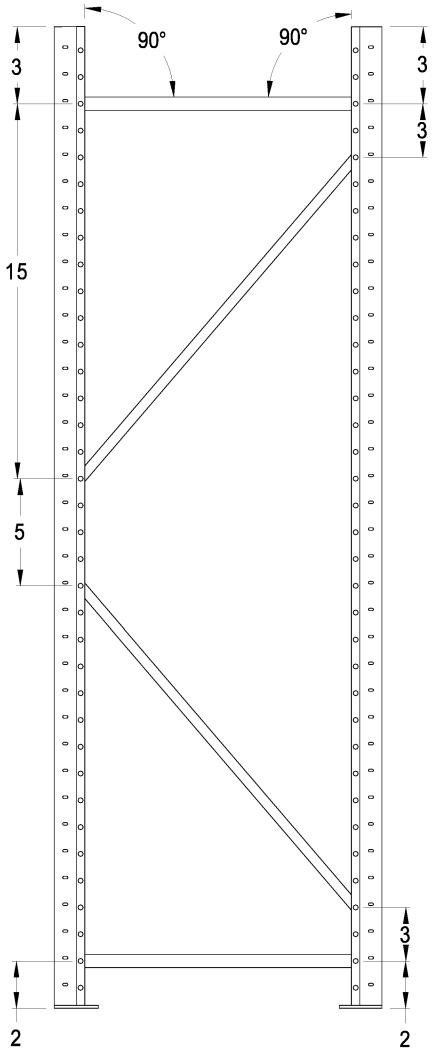


## 96" FRAME

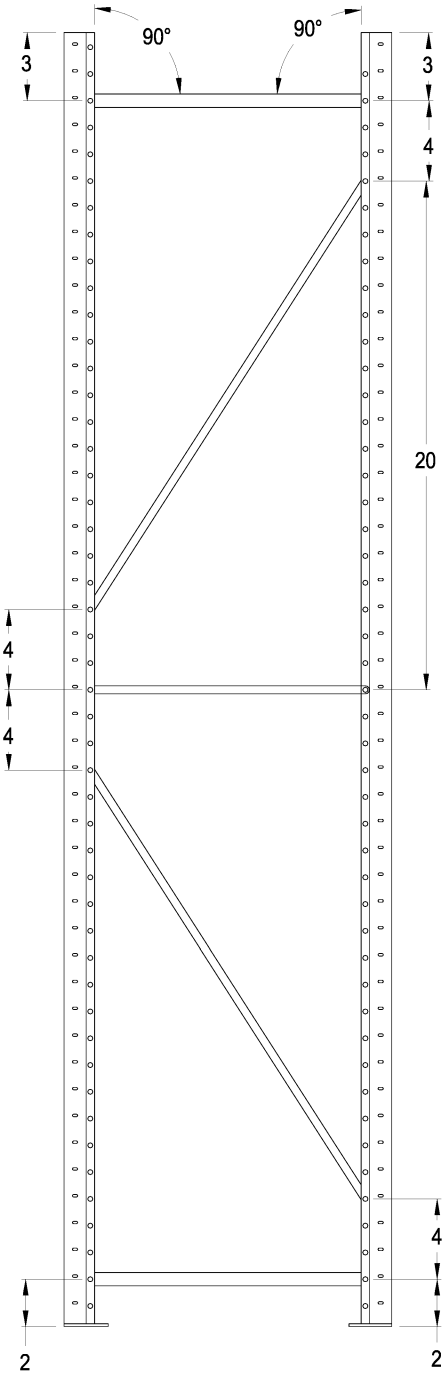


## 120" FRAME

