# One Compartment Utility Sink

## Stainless Steel Compartment Sinks



### Certifications:

NSF

### Features:

- 1 1/2" Rounded Front and Side Edges
- Accommodates 8" On Center Faucets
- Drain Included
- 9" Backsplash
- 1 Year Warranty

### Material:

- T-304 Stainless Steel Deck & Bowl
- $1^{5/8}$" Galvanized Legs
- Adjustable High Impact Corrosion Resistant Feet

### Options:

- Faucets
- Lever Drains
- Water Lines

| Part Number | Unit Size (l x w) | Bowl Dim. (l x w x d) | Steel Gauge |
|---|---|---|---|
| BKUS-1-18-14 | 21" x 21 1/2" | 18" x 18" x 14" | 18 |
| BKUS-1-24-14 | 27" x 27 1/2" | 24" x 24" x 14" | 18 |
| BKUS6-1-2421-8 | 27" x 24 1/2" | 24" x 21" x 8" | 16 |
| BKUS6-1-1821-14 | 21" x 24 1/2" | 18" x 21" x 14" | 16 |
| BKUS6-1-2421-14 | 27" x 24 1/2" | 24" x 21" x 14" | 16 |
| BKUS6-1-3624-14 | 39" x 27 1/2" | 36" x 24" x 14" | 16 |

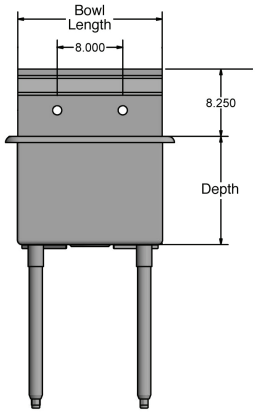


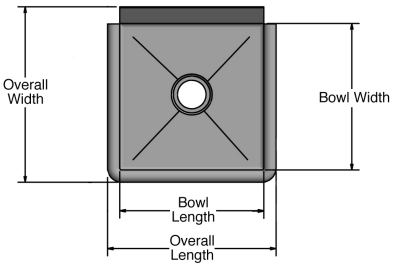


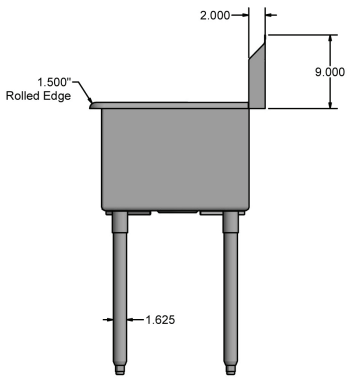


PRODUCT DATA SHEET

BK RESOURCES