User's manual	Manual del usuario	Manuel de l'utilisateur
Customer Service US: 1-800-645-2986	Servicio de atención al Cliente US: 1-800-645-2986	Service à la clientèle Canada: 888-645-2986

Bi-Level Refrigerated Bottle Filling Station, Filtered

Model 761243

Certified by IAPMO R&T against to NSF/ ANSI 372

Intertek
5015449

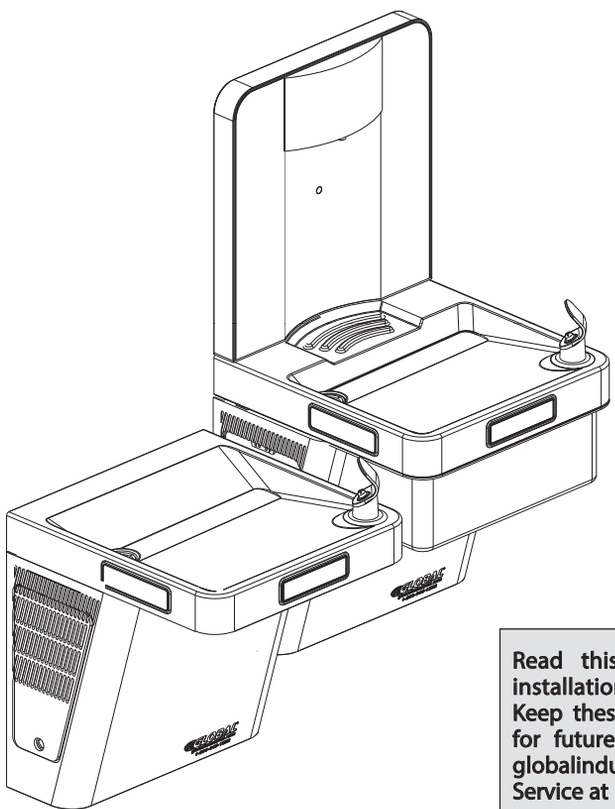

Read this manual thoroughly prior to installation, operation or maintenance. Keep these instructions in a safe location for future reference. For questions, visit globalindustrial.com or contact Customer Service at 1-800-645-2982.

⚠ WARNING

- Keep compressor in upright position for 24 hours before water connections and initial power-on.
- Failure to do so will void warranty.
- For indoor commercial use only.
- All installation work must be performed by licensed professional plumber.
- Two or more people are recommended to lift and install the unit.
- To avoid the risk of property damage and/or personal injury, mount the unit to a wall surface with adequate support.
- Check local codes for plumbing requirements prior to installation.
- Prior to initial installation, install a valve (not included) from the water supply.
- thoroughly all water lines and of all foreign matter before connecting to the cooler. Failure to do so will void warranty.
- Check for any leaks before initial operation.
- DO NOT attempt to repair or replace any part of your appliance unless it is recommended in
- this manual. All other services should be referred to a qualified technician.
- For use with clean, clear potable drinking water only.
- Water supply during installation to reduce risk of water damage.
- Ensure proper ventilation by allowing appropriate clearance of housing louvers to the wall on each side of the cooler, as in rough-in guide.
- NEVER wire the compressor directly to an electrical supply.
- DO NOT allow children to play with the appliance.
- Interior of unit may contain sharp edges. Wear gloves when handling or servicing unit.
- Failure to follow installation instructions will void warranty.

NOTE: These are intended for indoor commercial use only. Do not expose to freezing temperatures. The grounding of electrical equipment to water lines is a common procedure. This grounding may be in the building or occur away from the building. This grounding can cause electric feedback into the water cooler creating an electrolysis which creates a metallic taste or causes the water metal content to increase. Connect to water supply using non-conductive materials.

Bi-Level Refrigerated Bottle Filling Station, Filtered

Risk of Electrical Shock

- Disconnect power before servicing unit.
- Electric supply must be identical in voltage, cycle and phase to those in the below.
- Unit must be plugged into a GFCI outlet.
- Always pull the plug – not the cord – when disconnecting from the outlet
- DO NOT use if the power cord is worn or damaged.
- Power cords should only be replaced by service technicians using genuine replacement parts.
- Check local codes for electrical requirements.
- DO NOT disassemble or modify unit.
- Use Global Industrial filter only - Model 761215PF

Voltage/Hertz	115V/60Hz
*Chilling Capacity	5.3 GPH
Full-Load Amps	1.9 Amps
Rated Watts	185 W
Filter Capacity	3600 Gallons
Quick-Fill Rate	1.0 GPM
Operating Pressure	10 - 80 PSI
Water Flow	Laminar
Overall Dimensions (WDH-in)	36 X 18 7/8 X 37 7/8, 36 X 18 7/8 X 44
Certifications	UL399 and CAN/CSA 22.2 No. 120 ADA Compiant
* At 46° - 54° (F) against ambient air temperature of 77° (F)	

Package Contents:

Box 1 - 761213 Top Assembly for Bottle Filler

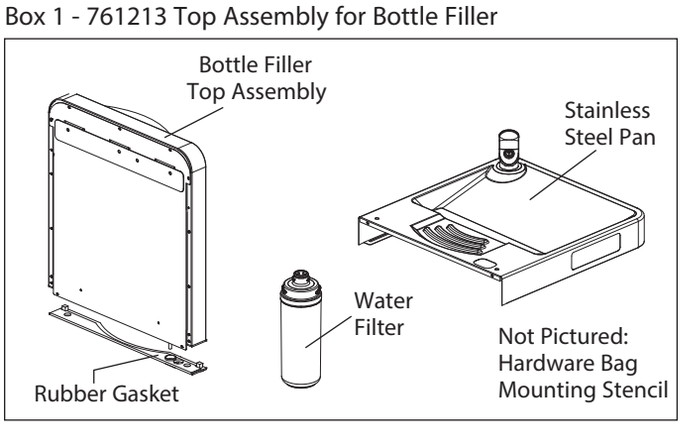

Box 2 - 761212 Cooling System for Water Fountain

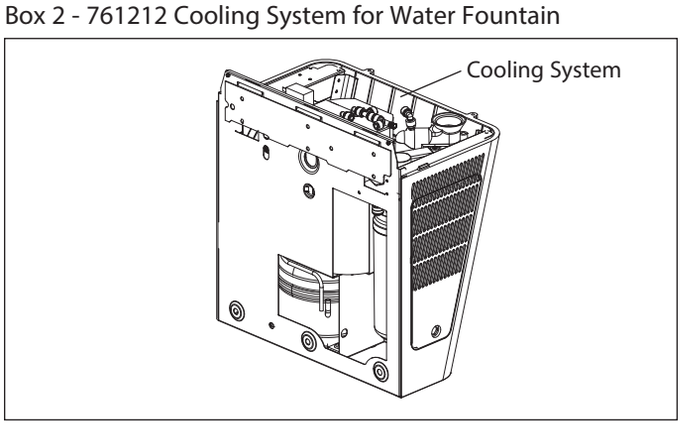

Note:

- Prior to installation, consult with local, state, and federal codes for proper mounting height.
- All installation and service should only be performed by licensed personnel.
- Dimensions shown below comply with ADA requirements at time of printing.
- Allow 4" minimum clearance on both sides to allow for proper ventilation through cabinet louvers.
- Thoroughly flush all water lines and fittings of all foreign matter before connecting to the Cooling System. Failure to do so will void warranty.

Required Tools:

1. Safety Glasses
2. Safety Gloves
3. Electric Drill
4. Phillips Head Screwdriver
5. Flathead Screwdriver
6. Tape Measure
7. Pencil
8. Level Device
9. (19) 75-lb. Capacity Flat Head Wall Anchors (appropriate for your wall type)
10. (19) Flat Head Anchor Screws

⚠ WARNING

- Review manual thoroughly and verify rough-ins before installation. Keep these instructions in a safe location for future reference.
- Keep compressor in upright position for 24 hours before water connections and initial power-on. Failure to do so will void warranty.
- It is recommended to assemble this product on a tabletop or bench.
- Fixture must be mounted to a industry standard wall surface. The wall surface must have adequate support to secure the fixture, with the addition of wall anchors (not included) if required.
- All receptacles must be wired to a GFCI protected circuit. Fixture must be earth grounded per National Electric Code (NEC).
- Inspect fixture and all parts for damage.

⚠ WARNINGS
DO NOT USE IF WATER PRESSURE EXCEEDS 80 PSI. MUST INSTALL FILTER AS INSTRUCTED. INLINE STRAINER RECOMMENDED TO PREVENT CLOGS. WARRANTY VOID IF NOT FOLLOWED.

Box 3 - 761250 Bi-Level Drinking Fountain Secondary Unit

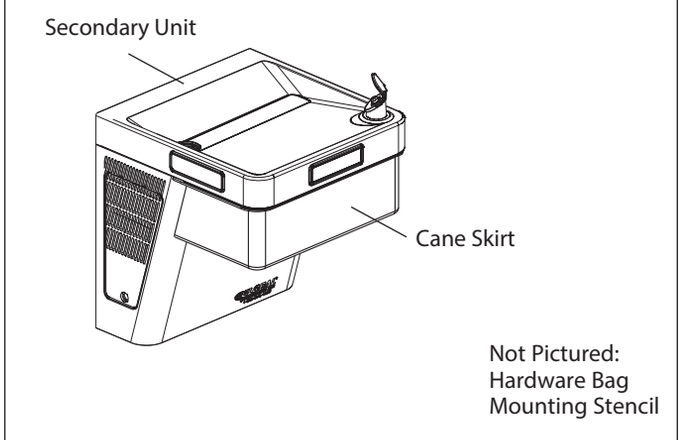

Bi-Level Refrigerated Bottle Filling Station, Filtered

Check local codes for plumbing requirements prior to installation.

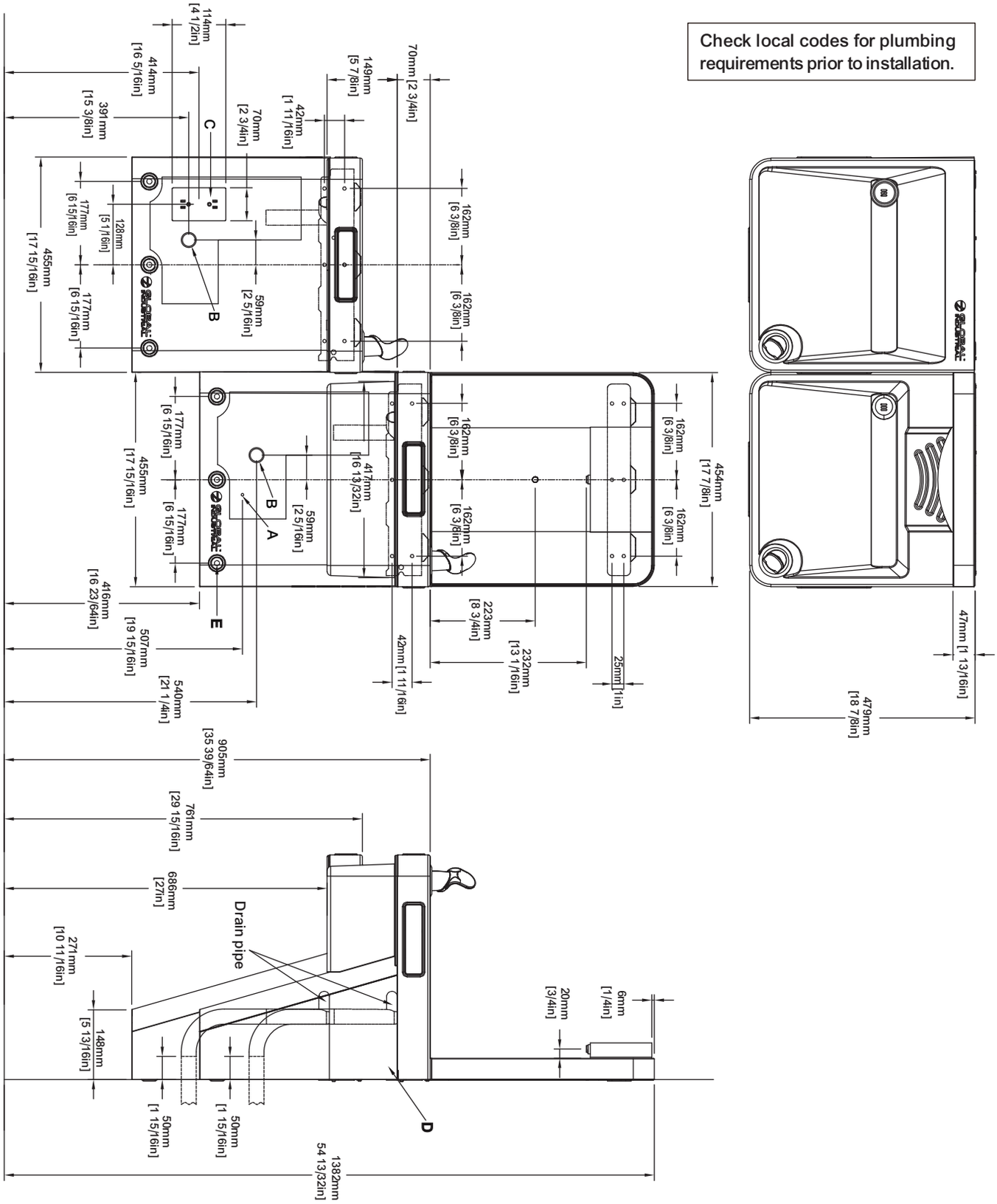

LEGEND:

A = Recommended water inlet supply location. Installation of a water shut-off valve (not included) to accept 3/8" O.D. unplated copper tube. Maximum of 3" from the wall.

B = Recommended water outline supply line location; to accommodate 1-1/4" nominal drain. Drain stub 2" from the wall.

C = Electrical supply: 3-wire recessed duplex receptacle.

D = Side louvers: Ensure proper ventilation is maintained by allowing 6" minimum clearance from the water cooler louvers on both sides of the machine to the wall.

E = 7/16" dia. wall anchor holes for fastening water cooler to the wall. This unit requires 75 lb. minimum wall anchors.

WARNING: Installations must use a GFCI (Ground Fault Circuit Interrupter)

Bi-Level Refrigerated Bottle Filling Station, Filtered

Check local codes for plumbing requirements prior to installation.

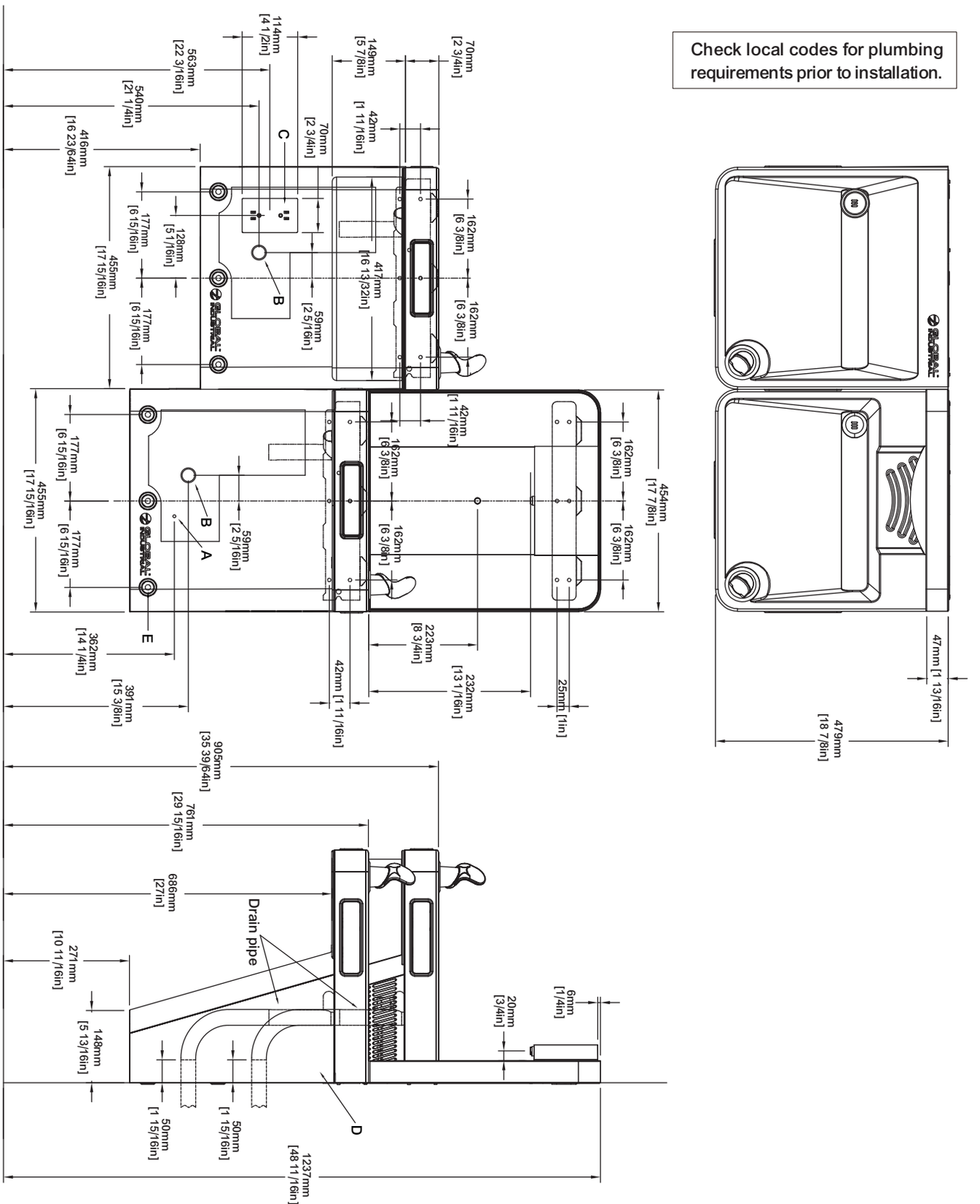

LEGEND:

A = Recommended water inlet supply location. Installation of a water shut-off valve (not included) to accept 3/8" O.D. unplated copper tube. Maximum of 3" from the wall.

B = Recommended water outline supply line location; to accommodate 1-1/4" nominal drain. Drain stub 2" from the wall.

C = Electrical supply: 3-wire recessed duplex receptacle.

D = Side louvers: Ensure proper ventilation is maintained by allowing 6" minimum clearance from the water cooler louvers on both sides of the machine to the wall.

E = 7/16" dia. wall anchor holes for fastening water cooler to the wall. This unit requires 75 lb. minimum wall anchors.

WARNING: Installations must use a GFCI (Ground Fault Circuit Interrupter)

Assembly Instructions

Bi-Level Refrigerated Bottle Filling Station, Filtered

Model 761243

BOX 1 & 2 CONTENTS		
Ref.	Qty.	Description
1	1	Cooling System
2	1	Lower Cover
3	1	Bottom Mounting Bracket
4	1	Bottle Filler Top Assembly
5	1	Back Plate
6	1	Top Mounting Bracket
7	1	Gasket
8	1	Stainless Steel Pan
9	1	Water Filter
10	1	Filter Access Door
H1	4	M4 x 8mm Lg. Torx an Head Anti-Theft Screw
H2	1	Torx Key
H3	2	M6 x 20mm Lg. Phillips Truss Head Screw
H4	2	ST4.2x 12. Phillips Pan Head Screw
H5	6	M4 x0 .7x 8mm Lg. phillips Flat Head Screw
H6	2	Filter Access Door Key

BOX 3 CONTENTS		
Ref.	Qty.	Description
11	1	Secondary Fountain System
12	1	Mounting Bracket
13	1	Cane Skirt
14	1	Elbow Connector Insert
15	1	T-Shape Connector
16	1	3-1/4' PE water line 3/8
17	1	13' PE water line 1/4
18	1	Water Control Valve
19	1	Aviation Plug

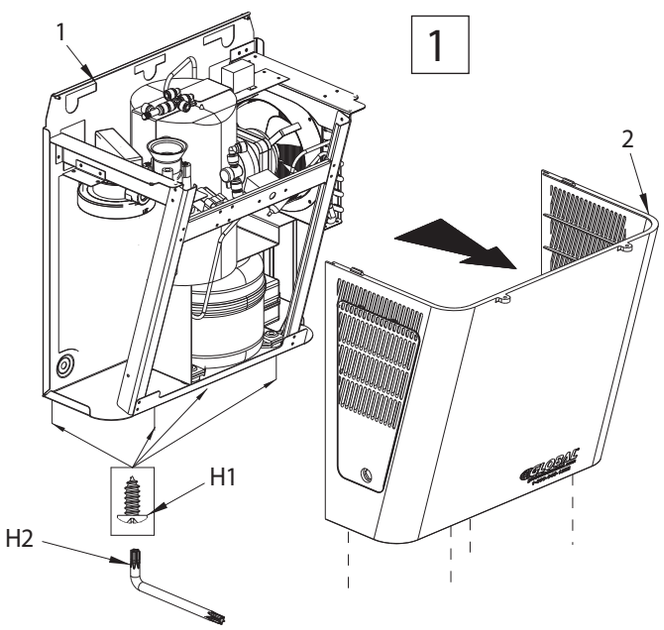

Box 2 - 761212 Cooling System for Water Fountain

Remove Lower Cover
Using the Anti-Theft Screw Star Key, remove the (4) screws at the bottom of the Lower Cover. Set Lower Cover aside and save screws for reinstallation.

⚠ WARNING
Assembly and installation of equipment should be performed by 2 people.

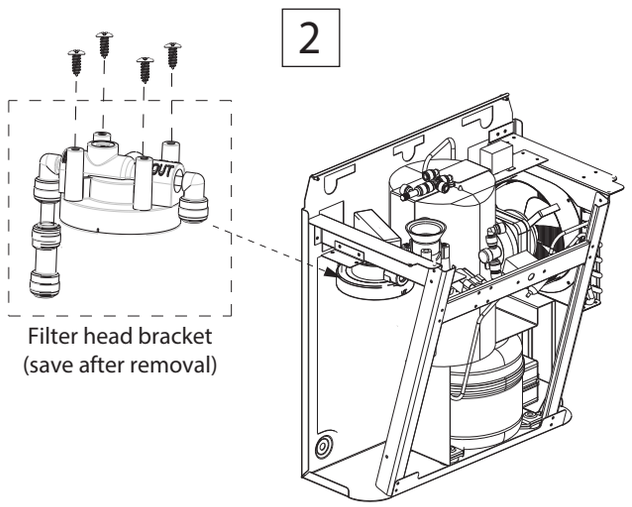

Filter head bracket
(save after removal)

Remove filter head bracket
Using a Phillips head screwdriver, remove the filter head bracket from the frame of the Cooling System by removing (4) screws. Set filter head bracket aside and save screws for reinstallation.

Bi-Level Refrigerated Bottle Filling Station, Filtered

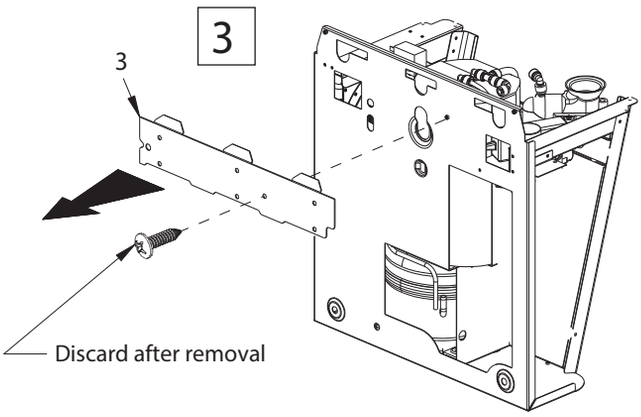

Remove mounting bracket
Using a Phillips head screwdriver, remove the Mounting Bracket from the rear of the Cooling System by removing (1) screw. Set bracket aside for reinstallation.

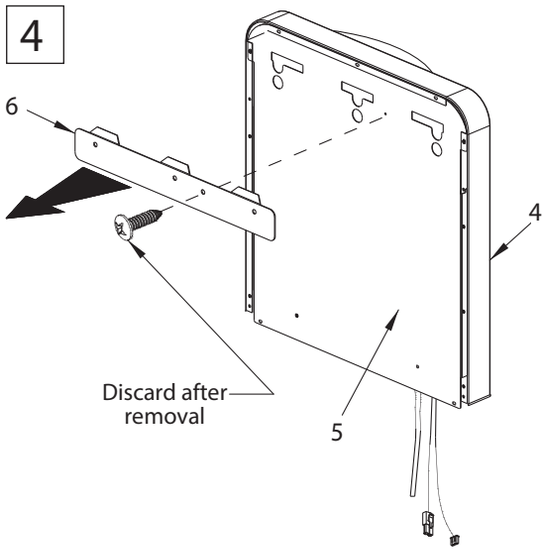

Box 1 - 761213 Top Assembly for Bottle Filler

Remove top mounting bracket
Using a Phillips head screwdriver, remove the Top Wall Mount Bracket fastened to the rear of the Bottle Filler Top Assembly by removing (1) screw. Set bracket aside and save screws for reinstallation.

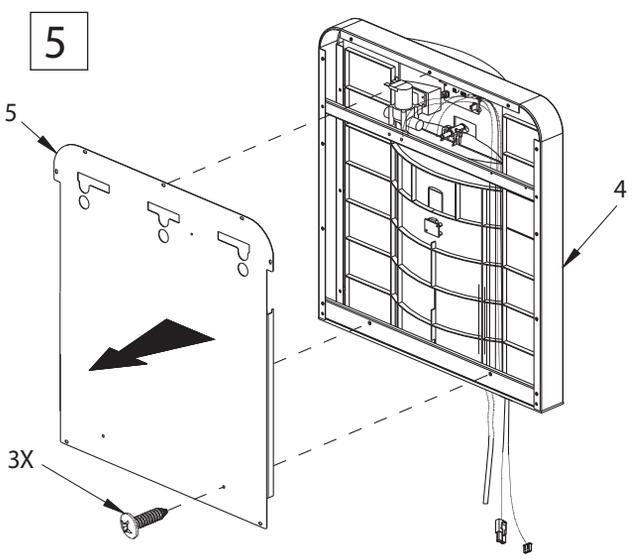

Remove back plate
Using a Phillips head screwdriver, remove Back Plate from the rear of the Bottle Filler Top Assembly by removing (3) screws. Set Back Plate aside and save screws for reinstallation.

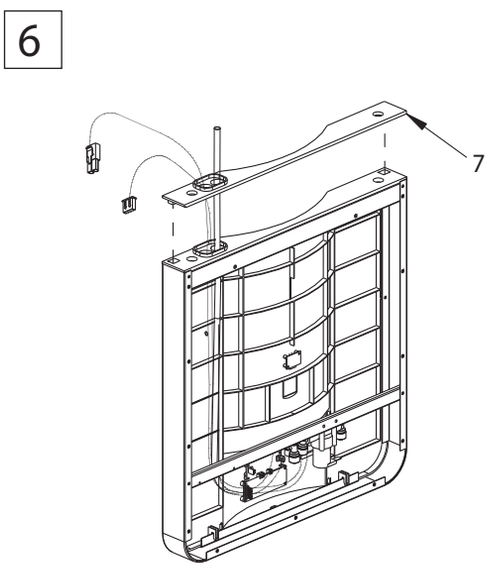

Attach gasket
Attach Gasket to the bottom of the Bottle Filler Top Assembly as shown.

Note: Ensure gasket is seated properly and lies flat so there are no gaps.

Bi-Level Refrigerated Bottle Filling Station, Filtered

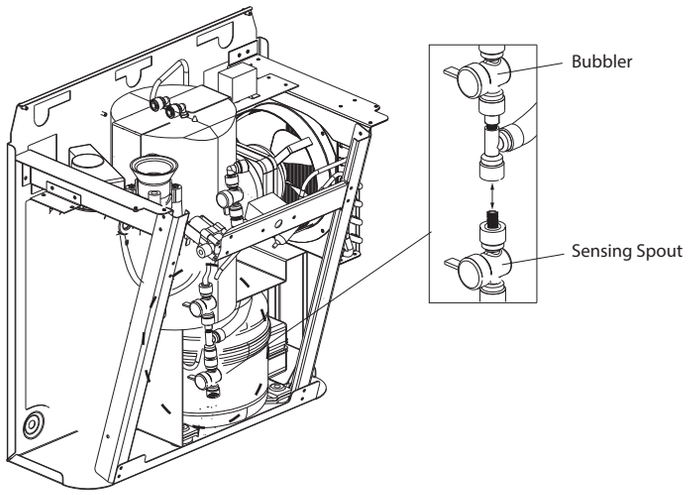

7a

Disconnect Current Water Line Connectors

• Disconnect the Water Control Valve labeled "Sensing Spout" from the T-Shape Connector.

7b

Connect Additional Water Line Connectors

• Attach T-Shape Connector (#15) to the open water line.

• Attach one end to the Water Control Valve labeled "Sensing Spout" and add #18 Water Control Valve to the other end. This control valve will be fed to the secondary drinking fountain in a later step.

• Attach Elbow connector insert to the #18 water Control Valve. This elabow connector insert will be fed to the secondary drinking fountain in a later step.

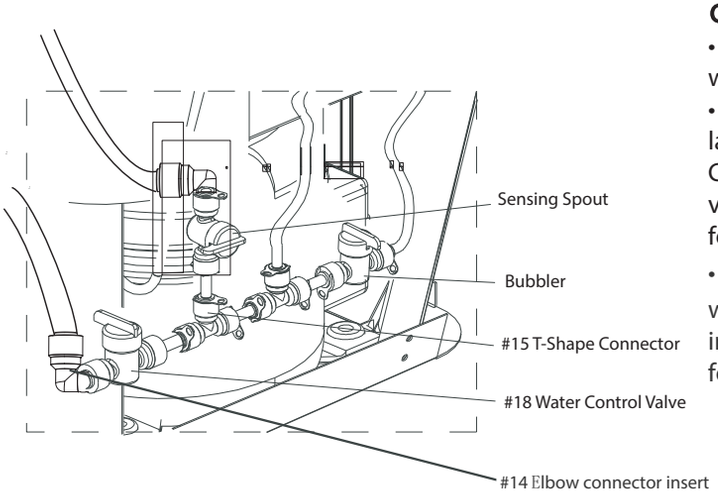

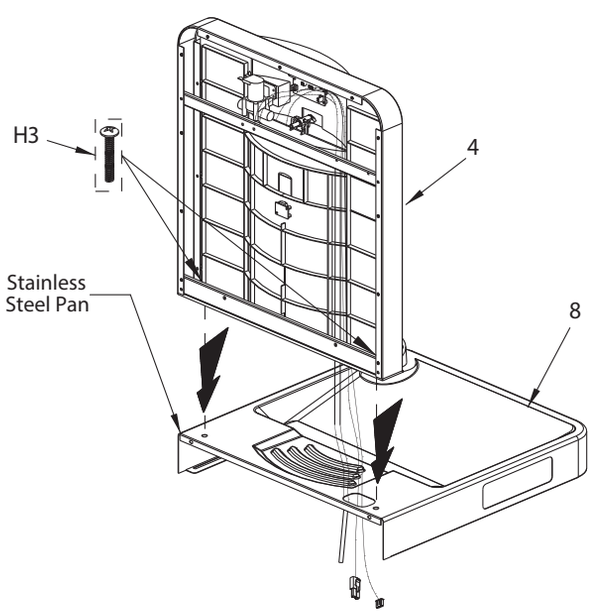

8

Attach bottle filler

Flip Bottle Filler Top Assembly right-side-up and carefully feed connections though the Stainless Steel Pan hole. Ensure gasket is seated properly and lies flat. Attach Bottle Filler Top Assembly to the Stainless Steel Pan using (2) H3 screws.

Bi-Level Refrigerated Bottle Filling Station, Filtered

9

Connect Bottle Filler Water Lines

- Connect water line (#1) from the Stainless Steel Pan to the Water Control Valve (#1) in the Cooling System.
- Push line until locked into place.
- Connect the water line (#2) in the Bottle Filler Top Assembly to the Water Control Valve (#2) in the Cooling System.
- Push line until locked into place.

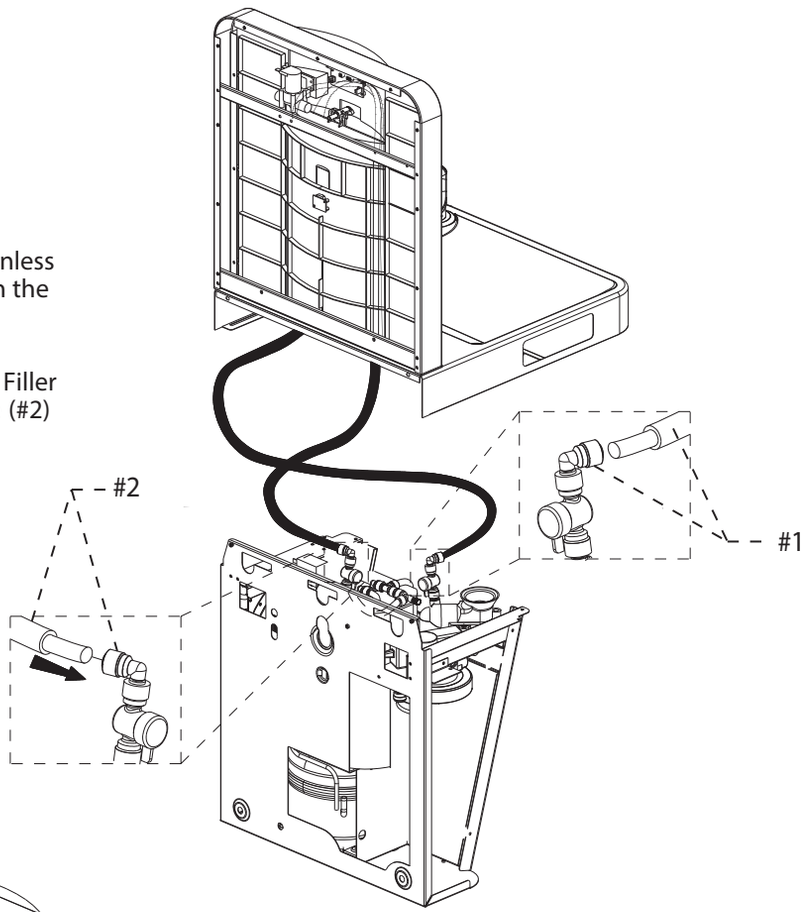

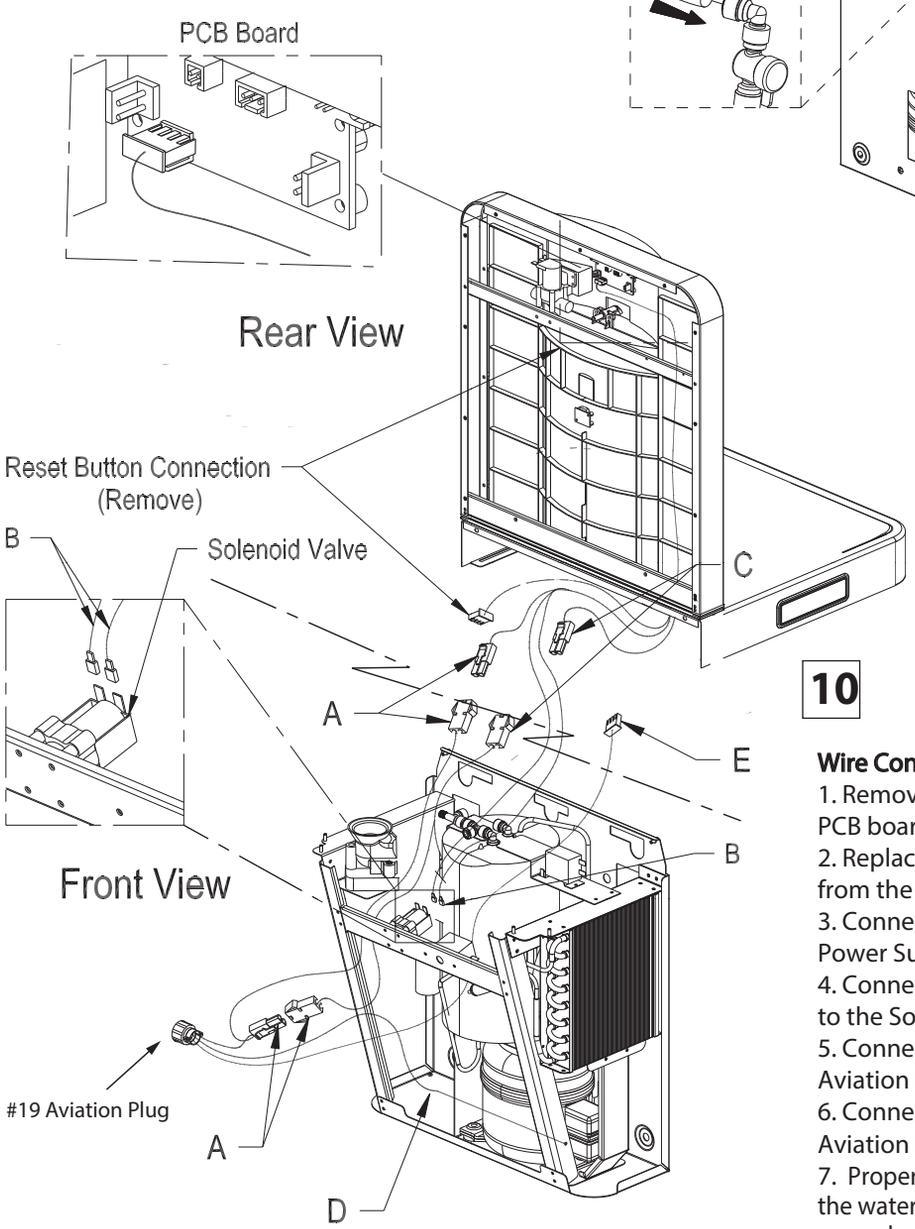

10

Wire Connections

1. Remove Reset Button connection wire from the PCB board on the rear of the bottle filler panel.
2. Replace this connection with Reset Button wire (E) from the Aviation Plug (#19).
3. Connect white Activation Connector (C) to Power Supply (C) in the Cooling System.
4. Connect the 2 Activation Connectors (B) to the Solenoid Valve (B).
5. Connect Female Activation Connector (A) from the Aviation Plug (#19) to Stainless Steel Pan Connector (A).
6. Connect Male Activation Connector (A) from the Aviation Plug (#19) to Power Supply Connector (A).
7. Properly ground Grounding Wire (D) to the frame of the water cooler. Do so by wrapping the end of the wire around a screw onto the frame.

Bi-Level Refrigerated Bottle Filling Station, Filtered

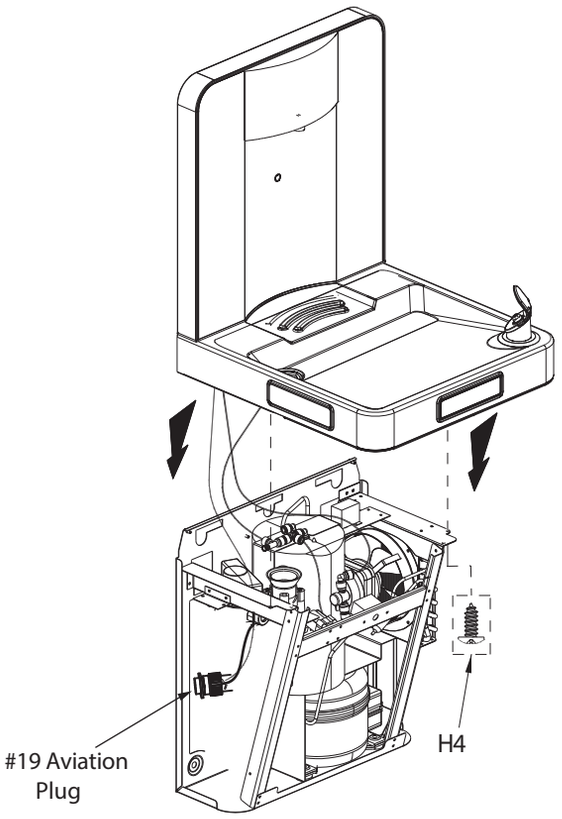

⚠ CAUTION
Avoid crossing wires against sharp edges

11

- Feed the Aviation Plug #19 through the Cooling System's frame and carefully lower the Stainless Steel Pan on top of the Cooling System.
- Attach the Stainless Steel Pan to the Cooling System using (2) H4 screws.

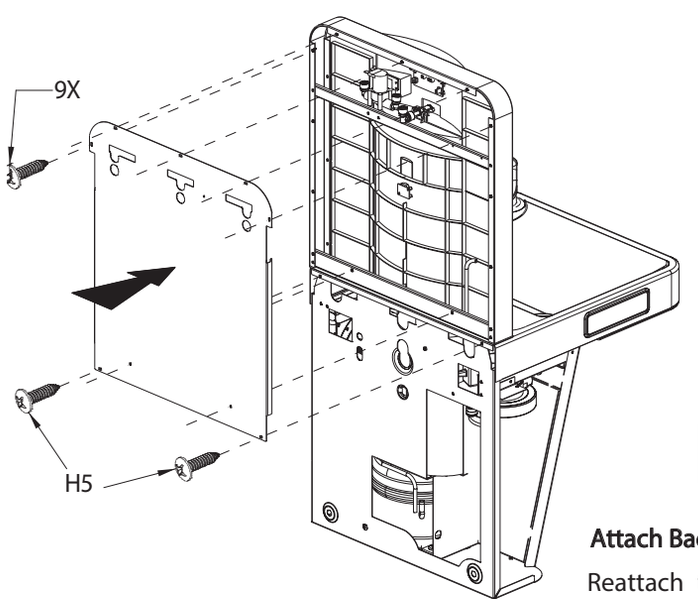

12

Attach Back Plate

Reattach the Back Plate onto the rear of the Bottle Filler Top Assembly using the (3) screws previously removed, plus (6) (H5) screws.
Set unit aside.

Bi-Level Refrigerated Bottle Filling Station, Filtered

13 Box 3: 761250 Bi-Level Drinking Fountain Secondary Unit

1 - Remove Mounting Bracket
Using a Phillips head screwdriver, remove the Mounting Bracket from the rear of the unit by removing (1) screw. Discard screw and set bracket aside.

3 - Remove Cane Skirt and Lower Cover
Using the Anti-Theft Screw Star Key, remove the (4) screws at the bottom of the Lower Cover and remove the (6) screws form the top lip of the Cane Skirt (#13). Set both components aside.

3 - Remove the Stainless Steel Pan
Using a Phillips head screwdriver, remove the (2) screws located on the backside of the pan and the (2) screws on the lower front panel. Set Stainless Steel Pan aside.

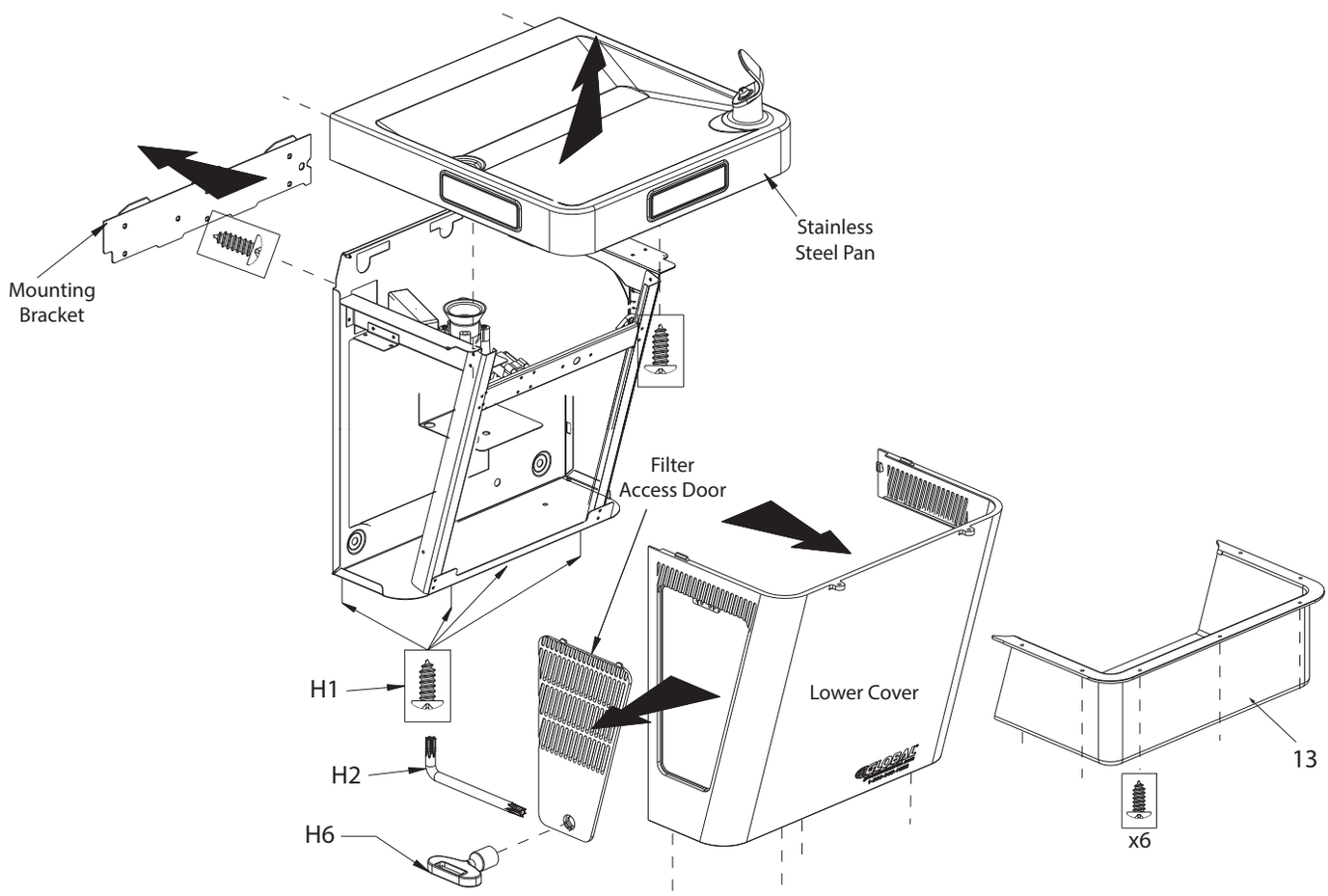

Bi-Level Refrigerated Bottle Filling Station, Filtered

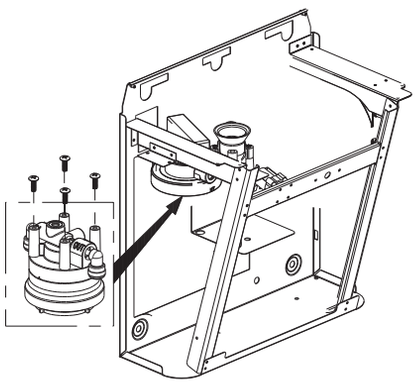

14 **Install filter head bracket to Secondary Unit**
Using a Phillips head screwdriver, install the filter head bracket onto the frame of the Secondary Unit using the (4) screws previously removed.

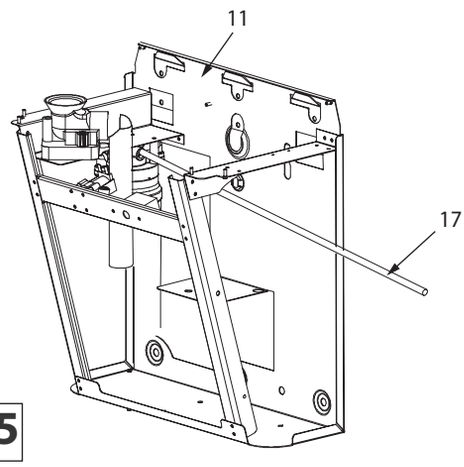

15

Connect #17 Water Line
Connect the 39' PE water line (#17) to the outlet of the filter and feed the line out right side of the Secondary Unit's frame.

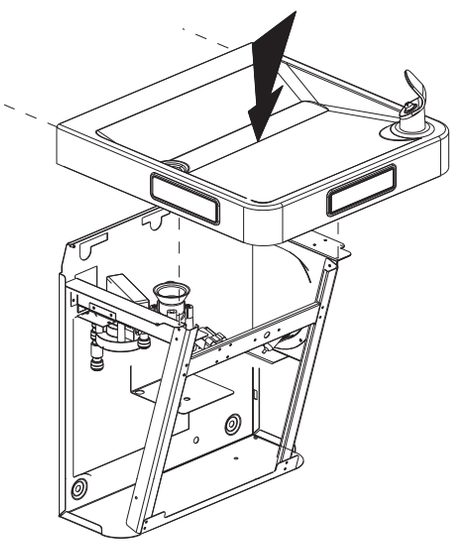

16 **Reattach Stainless Steel Pan**
Using a Phillips head screwdriver, reattach the Stainless Steel Pan back onto the Secondary Unit's frame using the (4) screws previously removed.

17 **Mounting 761250 Secondary Unit**

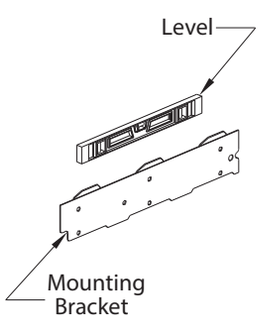

Attach mounting bracket to wall
Note: To comply with ADA requirements, the base of stencil must be installed 11" to 14 3/4" from the floor. See Rough-in Guide for additional ADA requirements.
Note: Before installing bracket to the wall, check location of power source, water line and drain.

- Affix stencil with tape to appropriate wall. It is recommended to use a level to ensure the stencil is hung straight horizontally.
- Drill (6) holes appropriate for the wall anchors (75 lb. minimum each) as indicated on the mounting bracket on the stencil. Use appropriate anchors for your wall type.
- Drill (2) holes appropriate for the wall anchors (75 lb. minimum each) as indicated on the bottom support holes on the stencil. Use appropriate anchors for your wall type.
- Remove stencil from the wall and install bracket onto the wall using appropriate anchors. Mounting hardware not included.

Bi-Level Refrigerated Bottle Filling Station, Filtered

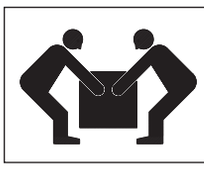

⚠ WARNING
installation of equipment should be performed by 2 people.

Always wear work gloves when lifting

18

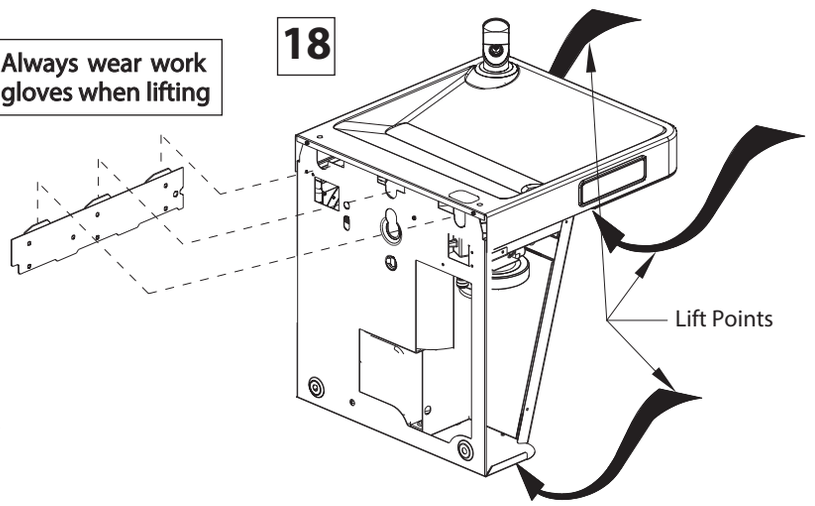

⚠ CAUTION
Hanging assembled unit to wall
Carefully hang assembled unit onto the wall by lowering onto mounting bracket.

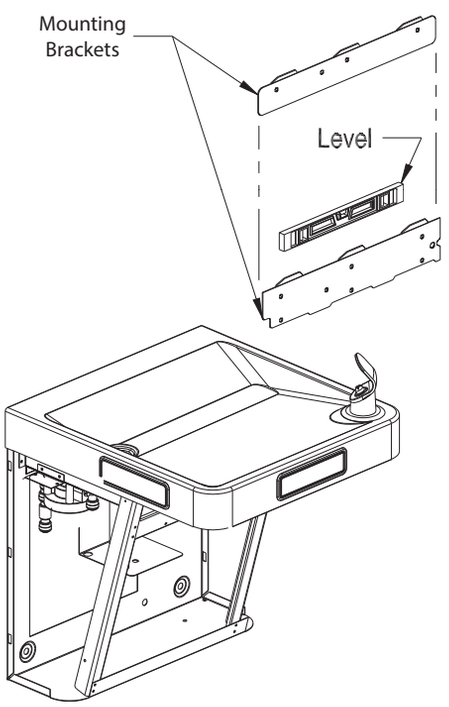

19

Mount Bottle Filler Unit Beside the Secondary Unit

Attach mounting brackets to wall

- Use the same stencil previously affixed to the wall it is recommended to use a level to ensure the stencil is hung straight horizontally.
- Drill (9) holes appropriate for the wall anchors (75 lb. minimum each) as indicated on the top and bottom mounting brackets on the stencil. Use appropriate anchors for your wall type.
- Drill 2 holes appropriate for the wall anchors (75 lb. minimum each) as indicated on the bottom support holes on the stencil. Use appropriate anchors for your wall type.
- Remove stencil from the wall and install top and bottom brackets onto the wall using appropriate anchors. Mounting hardware not included.

Note: To comply with ADA requirements, the base of stencil must be installed 11" to 14 3/4 " from the floor. See Rough-in Guide for additional ADA requirements.
Note:Before installing brackets to the wall, assure power source, water line and drain aligns to opening on unit

Bi-Level Refrigerated Bottle Filling Station, Filtered

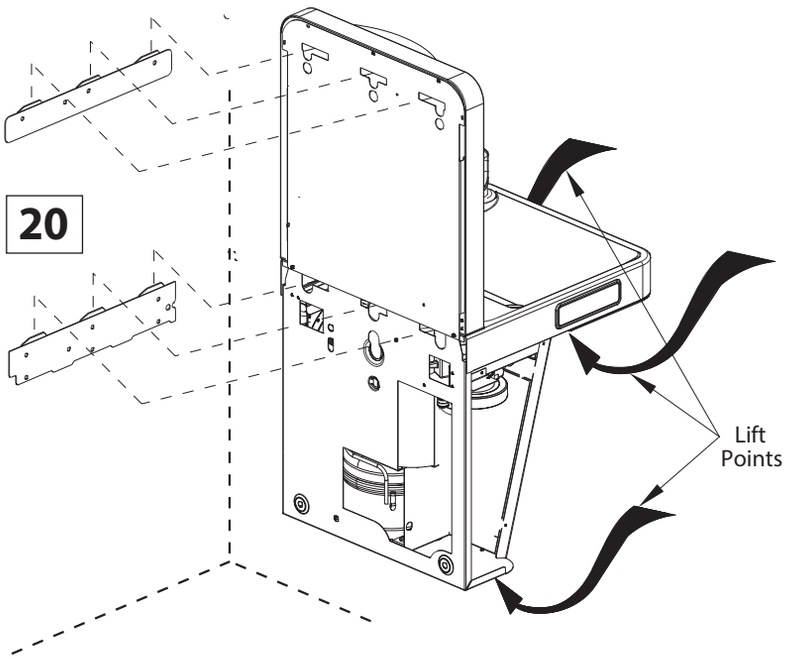

Hanging assembled unit to wall

- Carefully hang assembled bottle filler onto the wall by lowering onto both top and bottom wall mount brackets.

⚠ CAUTION

Once assembled, do not lift unit by Bottle Filler Top Assembly. Use two people when lifting. Always wear work gloves when lifting

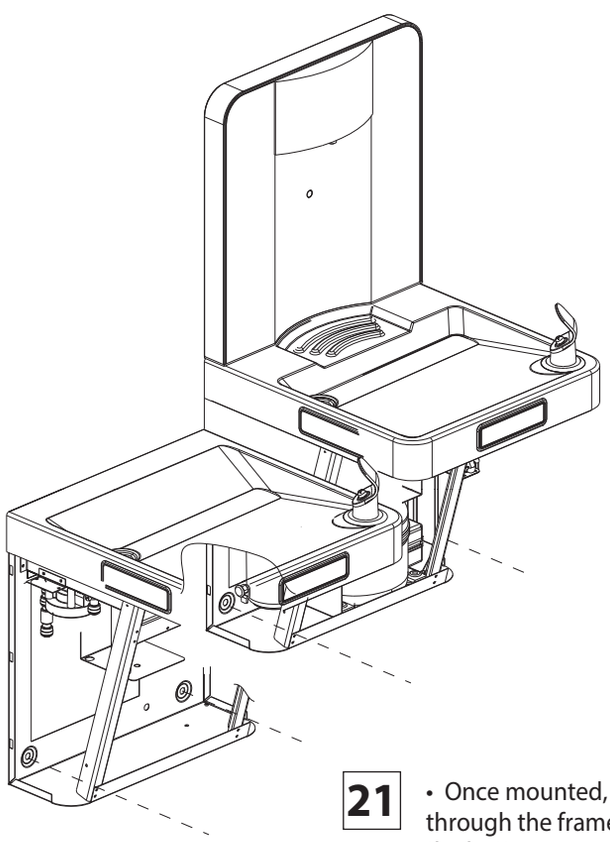

21

- Once mounted, attach 2 screws (not included) through the frame of the Cooling System and into the bottom support holes previously drilled into the wall. Follow the same steps for the Secondary Unit.

Bi-Level Refrigerated Bottle Filling Station, Filtered

22

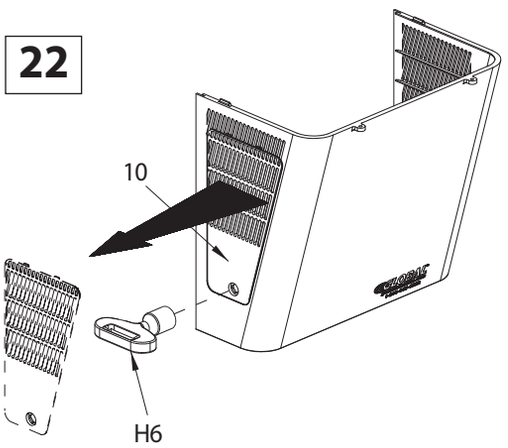

- Remove the filter access door on the Lower Cover using the provided key. Set door aside.

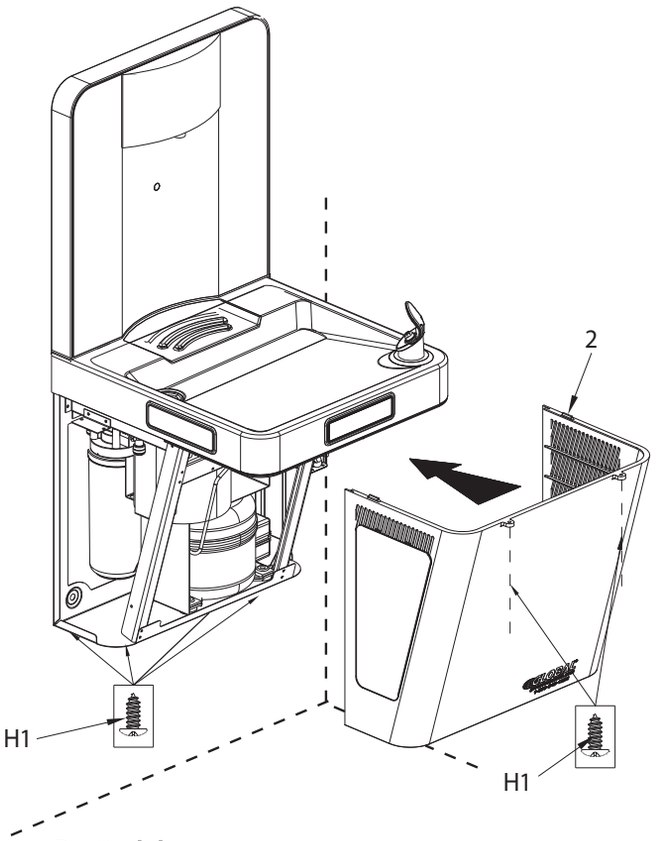

23

Reattach lower cover

- Reattach the Lower Cover to the Cooling System using (4) H1 anti-theft screws.
- Fasten the Lower Cover to the bottom of the Stainless Steel Pan using (2) H1 anti-theft screws.

24 **Connect Aviation Plug between the two units**
Connect Male Aviation Plug from the Bottle Filler unit to the Female Aviation Plug in the Secondary Unit.

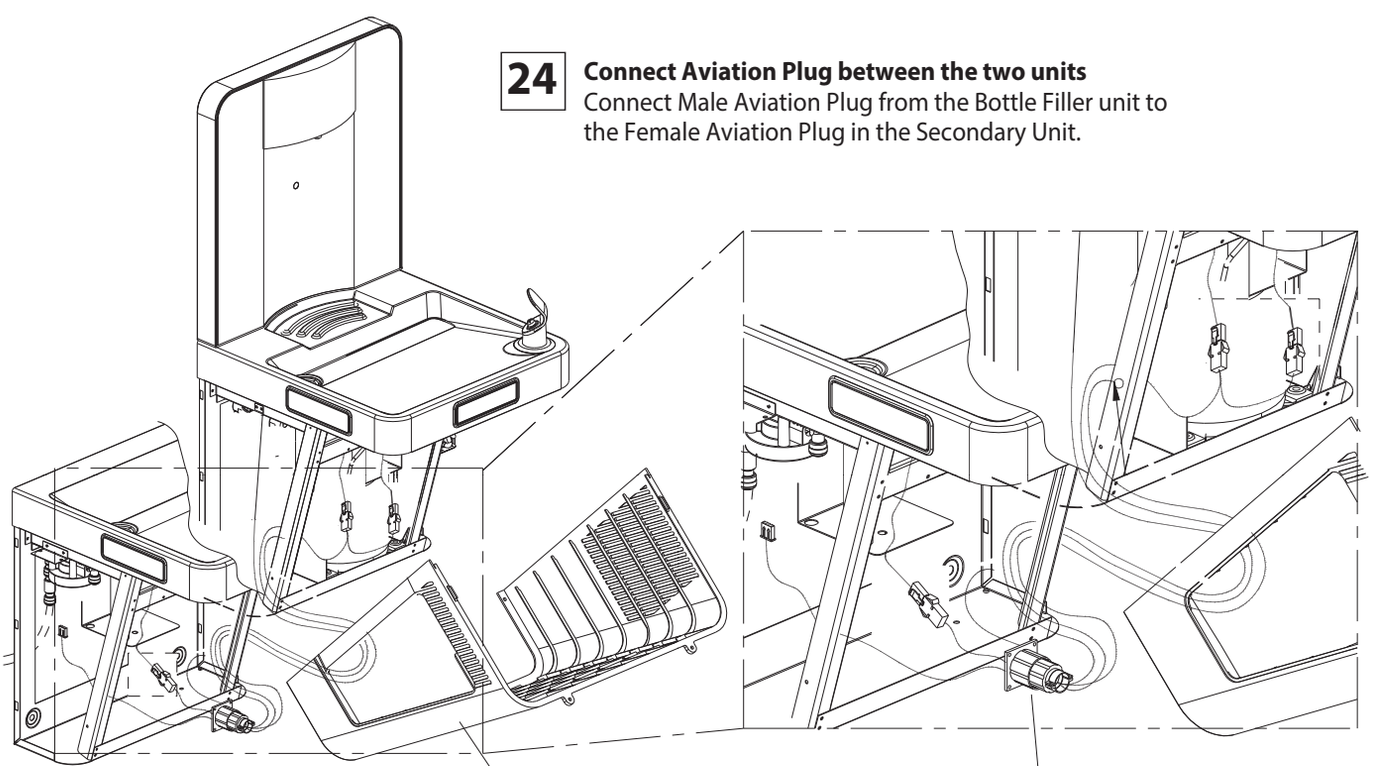

Note: Lower Cover shown detached for illustration purpose only.

Aviation Plug

Bi-Level Refrigerated Bottle Filling Station, Filtered

25 **Connect Water Lines**

- Connect the 1/4 water line (#17) from the filter head in the Secondary Unit, to the Cooling Tank in the Bottle Filler unit.
- Connect 1/4 water line (#17) from the Water Control Valve (#18) in the Bottle Filler unit, to the Solenoid Valve in the Secondary Unit.

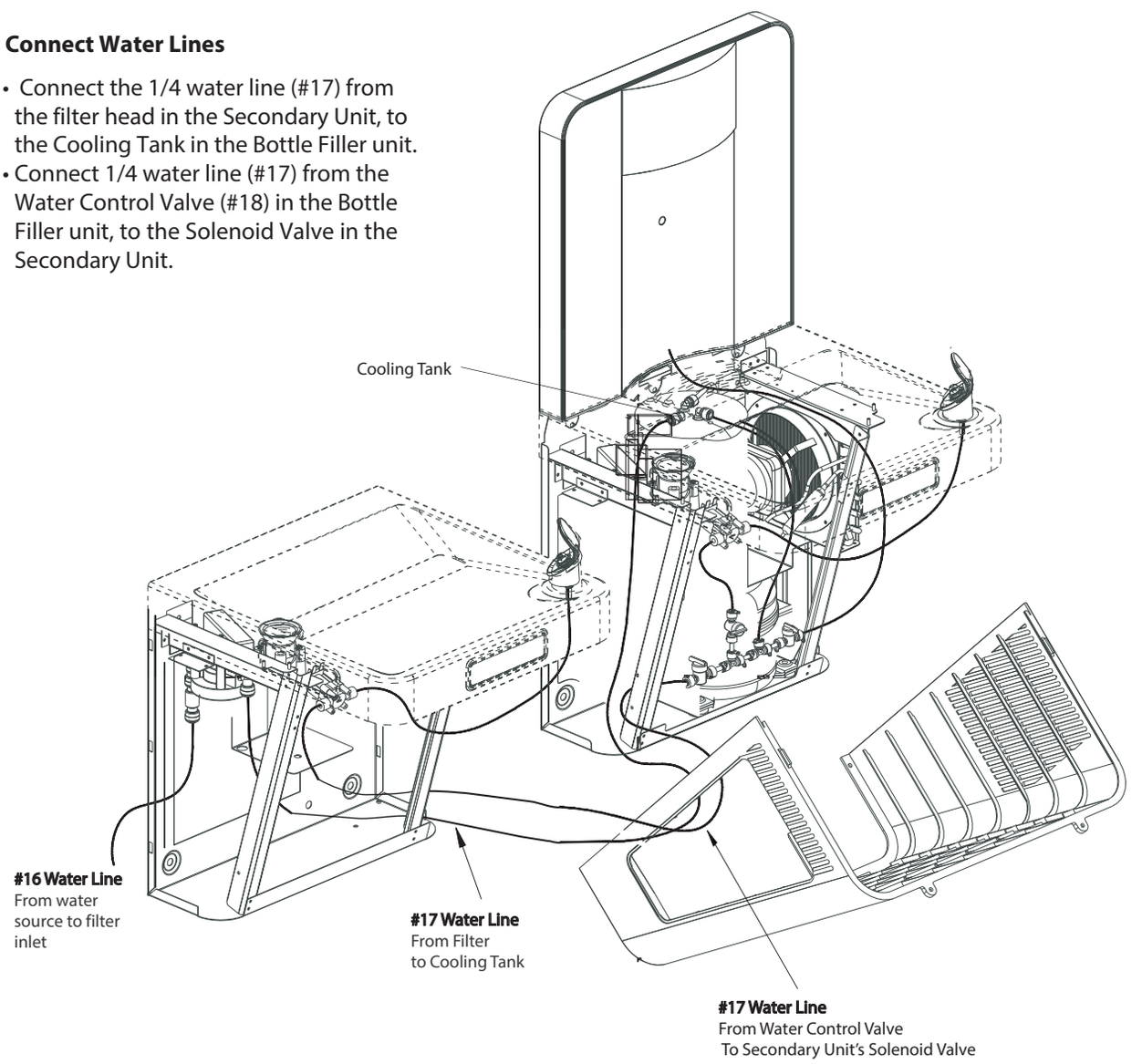

Note: Lower Cover shown detached for illustration purposes only.

Bi-Level Refrigerated Bottle Filling Station, Filtered

26a

Attach Decoration strips

- Attach Decoration strips to the underside of the Stainless Steel Pan of secondary unit after they are removed from higher unit attached.
- Attach filter door of higher unit to secondary unit after it is removed from higher unit.

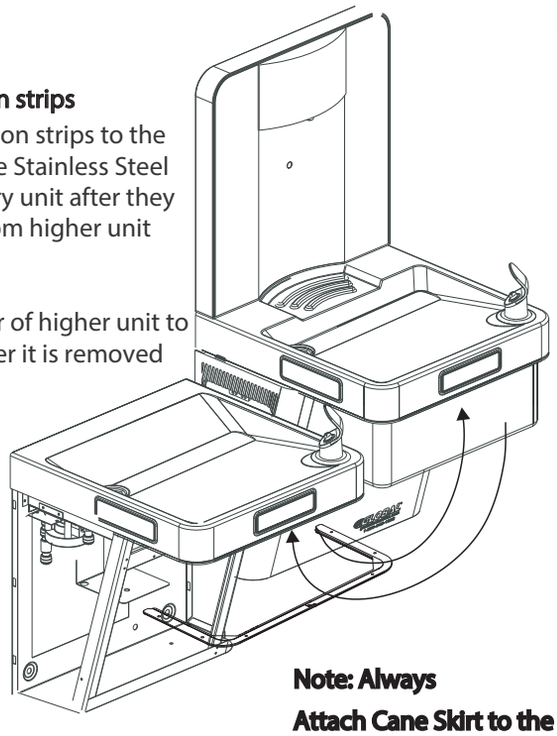

Note: Always Attach Cane Skirt to the unit that is mounted higher

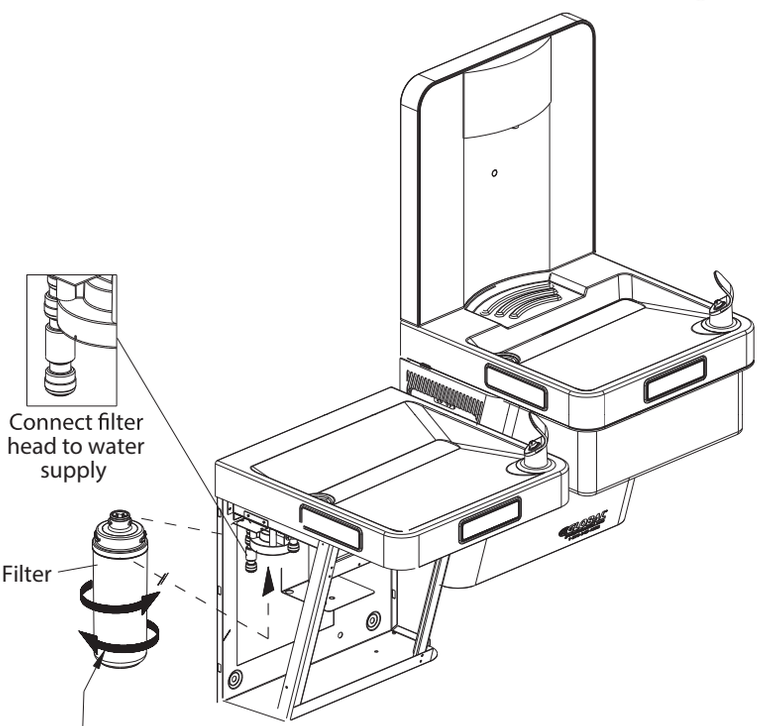

26b

Attach Cane Skirt

- Attach Cane Skirt to the underside of the Stainless Steel Pan using (6) H1 anit-theft screws.
- Attach filter door of secondary unit to higher unit.

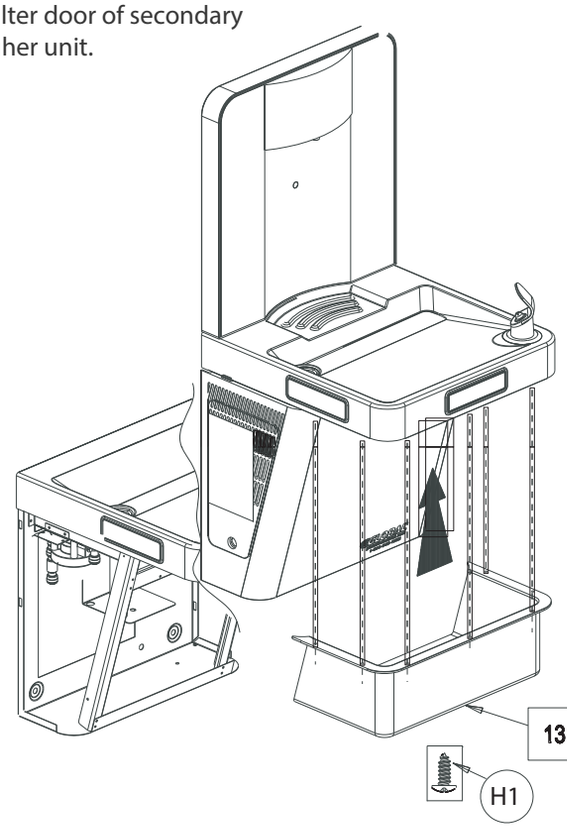

27

Install water filter

- Remove the receiver protective cover from the water filter.
- Insert filter into the filter head by turning clockwise until locked into place.

Check local codes for plumbing requirements prior to installation.

28

- Turn on buildings water supply and check all connections for leaks.
- Fix any leaks before continuing.
- Plug power cord into outlet.

Note: If cooling system is on its side or back for more than 10 minutes, allow it to stand in the upright position for 24 hours before water connections and initial power-on.

Bi-Level Refrigerated Bottle Filling Station, Filtered

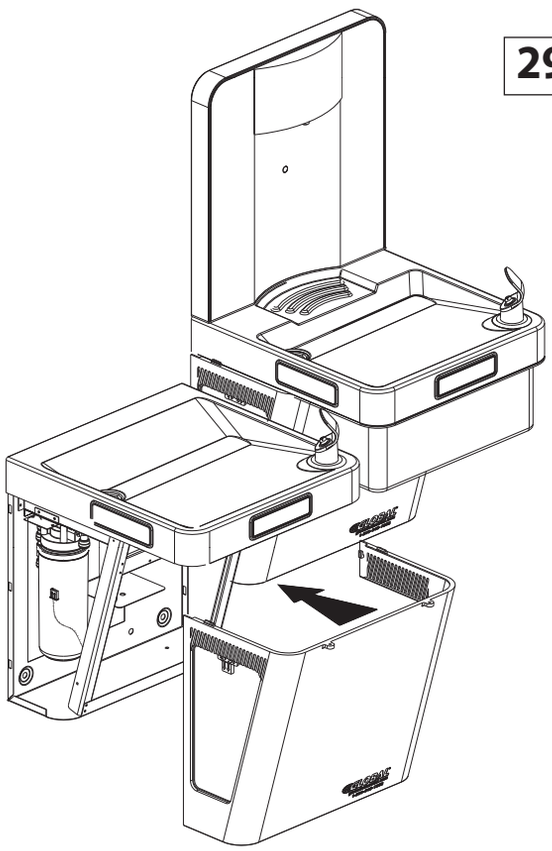

29 **Attach Lower Cover to Secondary Unit**

- Attach the Lower Cover (with the notch-out) to the Secondary Unit using (6) H1 anti-theft screws.

WARNING:
Make sure all electrical and water lines are tucked before attaching Lower Cover.

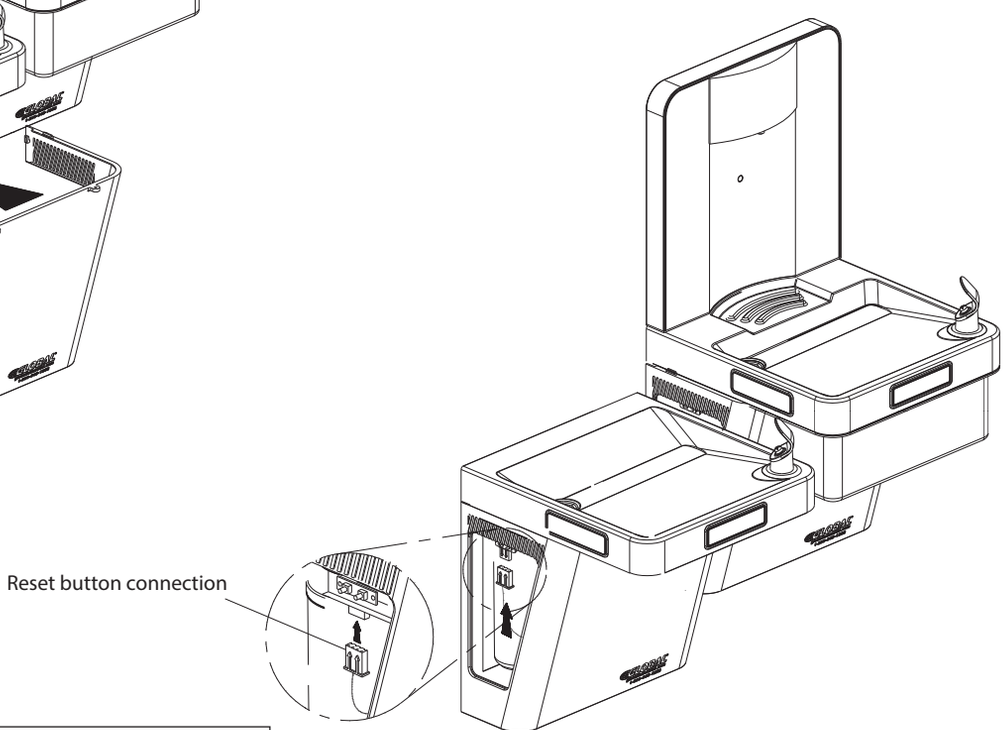

30

Connect reset cable to activation button

- Connect the Reset Button connection cable to the Activation Buttons located at the top of the filter access door frame.
- Reinstall the filter access door using the provided key.

⚠ WARNING

Risk Of Electrical Shock

• Turn off the power prior to performing any maintenance.
• Verify supply voltage accuracy.
• Ensure all electrical and grounded connections are in accordance with the National Electrical Code and any other applicable locale code requirements.
• All wiring connections should be capped with approved wire connectors.

The warning, precautions, and instructions discussed cannot cover all possible conditions and situations that may occur. Failure to heed these warnings may result in property damage and personal injury.

General Safety Information

• To reduce the risk of property damage, personal injury, electric shock, galling equipment, and other hazards, please read all instructions and warnings.
• installation, service, and maintenance should be done by a qualified technician.
• All parties must follow proper safety procedures and precautions at all times.
• Do Not Install Damaged Products.

Bi-Level Refrigerated Bottle Filling Station, Filtered

Operation

Note: Initial water flow may have sputter due to air in the water lines; this will be eliminated once air is purged from all water lines.

To operate bottle filler, verify proper dispensing by placing bottle, hand or any opaque object in front of the sensor area.

To operate drinking fountain, push front or side activation buttons on the stainless steel pan to dispense cooled-filtered water from the bubbler.

When unit is plugged in for the first time, the LCD will display: 00000000. If not, the filter monitor needs to be reset – refer to Resetting Filter Monitor section below.

Adjusting Settings

Water Flow Pressure: Adjust the water flow pressure as needed by turning the water control valve. Turn clockwise to decrease the water pressure, or counterclockwise to increase the water pressure.

Note: When adjusting, aim water flow to the center of the stainless steel pan.

Note: Initial dispenses may have air in line which may cause a sputter. Allow a few seconds for air to be purged from the water line.

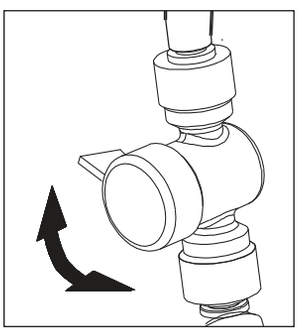

Water Temperature: Machine comes with a preset water temperature of around 45°F. If a different temperature is required, remove Lower Cover and access the thermostat on the front housing frame. Using a flathead screwdriver, turn thermostat screw clockwise to lower temperature setting.

Note: Please allow 5-10 minutes for water temperature to change.

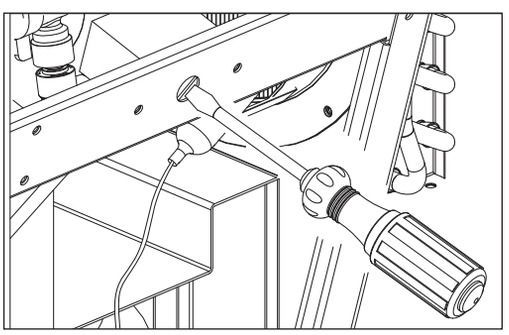

Installing/Replacing Filter

1. Remove filter access door on the lower cover using the provided key (H6).
2. Grasp old filter and turn counterclockwise to remove from the filter head.
3. Press and hold ENTER button for 5 seconds to reset this bottle counter number to zero 00000000.
4. Tap SET button 1 time or wait 5 seconds to return to standard bottle counter view.

Once the filter status resets to the full 5 bars, the LCD screen will flash, and the machine will automatically flush for 3 minutes.

Replacement Filters: Model 761215PF
For more information visit: globalindustrial.com or call 1-800-645-2982.

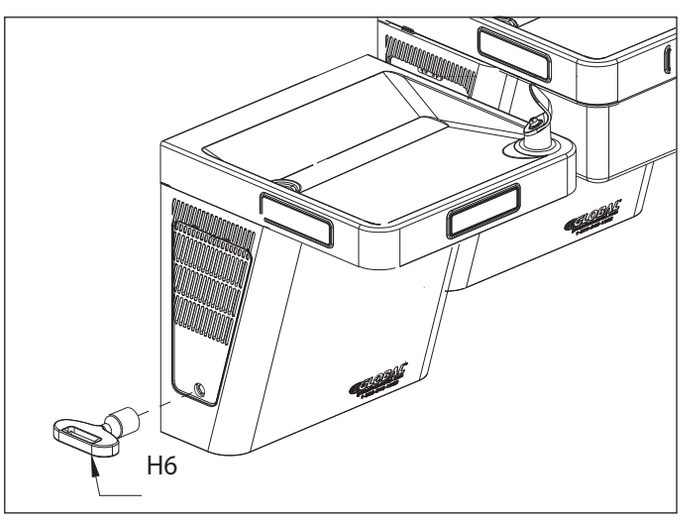

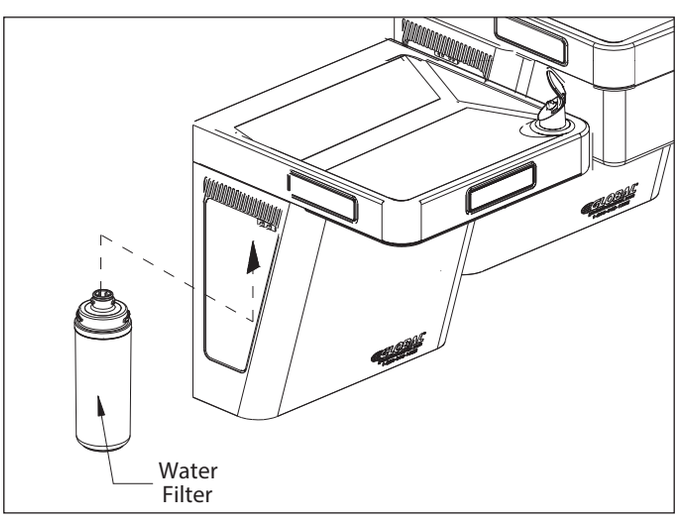

Bi-Level Refrigerated Bottle Filling Station, Filtered

Programming Settings

Accessing the Programming Buttons:
To access the programming buttons, open the filter access door on the lower cover using the provided key (H6). The two program buttons are located on the top of the filter access door frame.

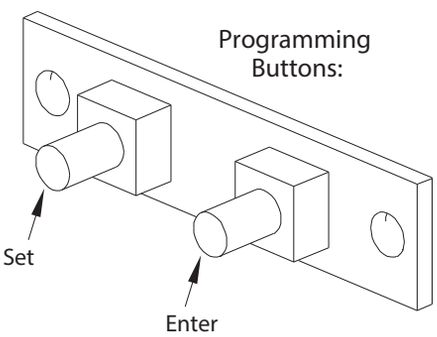

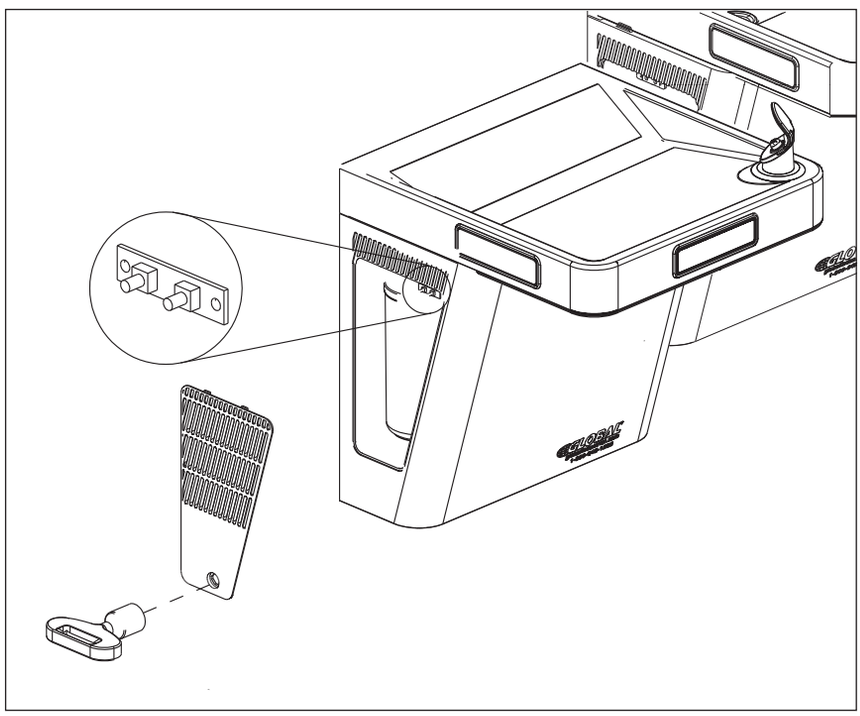

Resetting Filter Status:

1. Press and hold ENTER button for 5 seconds, until Reset Ft is displayed on the LCD screen.
2. Tap SET button to access Reset Ft mode.
3. Press and hold SET button for 5 seconds to reset filter status. The LCD screen will display 0000 and the LCD filter status bar will reset to the full 5 bars.

Select Filter Size:

1. Press and hold ENTER button for 5 seconds until Reset Ft is displayed on the LCD screen. Tap ENTER button untill Ft Size is displayed on the LCD screen.
2. Tap SET button to access Filter Size mode.
3. Tap SET to toggle between 1500, 3000, and 3600 gallon filter size options, or No Ft to bypass filter size if a filter is not being used.
4. Tap ENTER button to confirm your filter size.

Resetting Bottle Counter:

1. Press and hold ENTER button for 5 seconds.
2. Tap ENTER button until Reset Ct is displayed on the LCD screen, then tap SET button to access Reset Ct mode.
3. Press and hold SET button for 5 seconds to reset bottle counter number to zero 00000000.



4. Tap ENTER button 1 time to return to standard bottle counter view.

Note:

- After press and hold button for 5 seconds, tap Enter to toggle between Sens Set, Filter Size and Reset Ct available too.
- If a selection is not made within 10 seconds, system will automatically return to the standard bottle counteriew.
- Changes on Sens Set mode not allowed

Bi-Level Refrigerated Bottle Filling Station, Filtered

Filter Status Lights	
When filter level is at 100%	5 LED bars will be displayed
When filter level is at 80%	4 LED bars will be displayed
When filter level is at 60%	3 LED bars will be displayed
When filter level is at 40%	2 LED bars will be displayed
When filter level is at 20%	1 LED bar will be displayed
When filter level is at 10%	1 LED bar will be displayed and will FLASH
	LCD will FLASH between "CHG FLT" and the bottle count
When filter level is at 0%	0 LED bars will be displayed
	LCD will display "CHG FLT" entire time

Maintenance

⚠ WARNING

ALWAYS disconnect power and shut-off main water supplier prior to maintenance. Observe entire unit for possible water leakage.

- Inspect Cooling System every 6 months for leakage, proper operation and performance.
- When cleaning, do not use harsh chemicals, abrasive or petroleum based cleaners. Doing so will void warranty.
- Exterior parts can be cleaned using a soft cloth with mild detergents or soapy water. Do not use steel soap pads. Rinse and towel dry.
- Extra caution should be used to clean mirror finished stainless steel panels, as they can be easily scratched.
- Periodically clean cabinet ventilation louvers and condenser fins with a vacuum cleaner, or air hose to avoid excess dirt.
- Periodically remove the Lower Cover of the Cooling System the and clean out water drain.
- To clean blockage/debris from the bottle filler spout – twist off the silver spout, remove the filter screen and run under clean water. Reattach the screen and spout.

Troubleshooting

Issue	Possible Cause	Suggested Action
Water temperature not cool	The thermostat is set too high	Lower the water temperature on the thermostat (see Adjusting Settings, page 10).
	No power to unit	• Check power cord • Check the electrical receptacle for power and correct voltage; electric supply must be identical in voltage, cycle and phase to that specified on nameplate • Check for loose wires within the Cooling System • Check to see if GFCI outlet tripped
Restricted or no water flow	Water control valve(s) are closed	Access water control valve and turn on. Adjust water flow pressure as needed (see Adjusting Settings, pg 10)
	Blockage in water line	Check water supply lines and flush out any blockage
Noisy operation	Condenser fan blades not turning freely	Clear fan blades free from any restrictions
	Hardware rattling	Ensure hardware is tightened
Water not dispensing properly to bottle	Infrared sensor range needs to be adjusted	The infrared sensitivity range is factory preset. If this range requires adjusting, it can be set with a sensitivity range from 01 (minimum sensitivity) to 10 (maximum sensitivity). 1. Access programming buttons (see Programming Settings, pg 10). 2. Press and hold SET button for 5 seconds until Reset FT is displayed on the LCD screen. Then tap SET button 1 time to toggle to Sens Set 1. setting on the LCD screen. 3. Tap ENTER button multiple times to toggle through desired range and set to user preference. 4. Tap SET button 3 times or wait 5 seconds to return to standard bottle counter view.