ASSEMBLY INSTRUCTIONS

GLOBAL INDUSTRIAL™
We can supply that.®

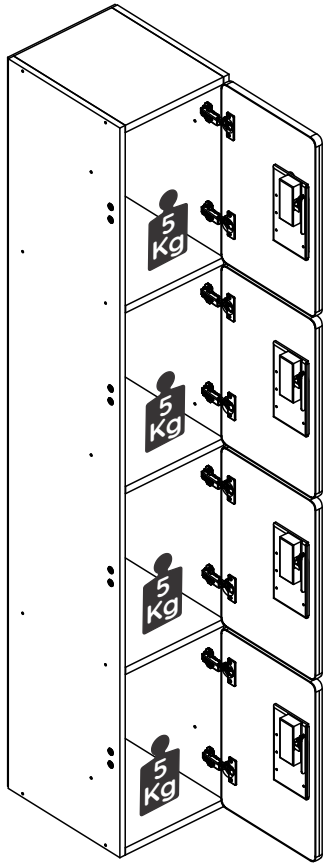

20Kg
MAXIMUM WEIGHT SUPPORTED

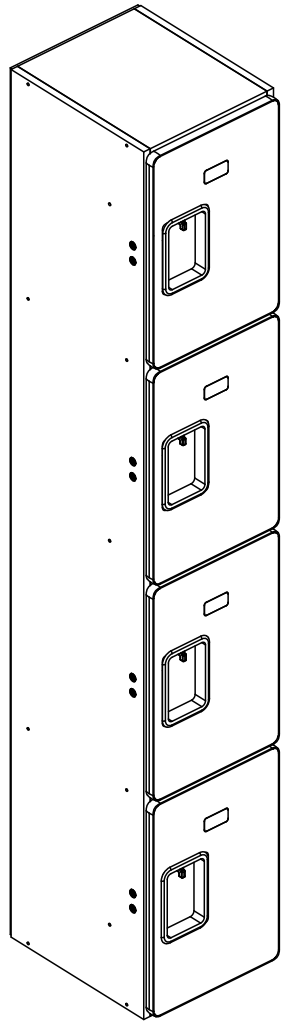

WOOD LOCKER, 4 - TIER

Maintenance Tips

*To clean remove or stains, use a piece of flannel dampened with a water and alcohol solution. Avoid direct sunlight.

Rev. 02 - 27/11/2023

HARDWARE LIST

The hardware drawings are full-scale, so their dimensions are the same as the actual hardware.

ID	IMAGE REFERENCE	# OF PIECES
A	4,5x60mm	20
B	4,5 x 16mm	32
C	Silicone stopper	08
D	8x30mm	20
E		08
F	11x12	40
H		03
K		04



KIT TO AVOID TIPPING (Quantity per module)

L		01
M	4,5 x 16mm	02
N		01
O	4,5 x 60mm	01

NOTE: OPTIONAL BUILT-IN LOCKS AVAILABLE UPON REQUEST IN THE PURCHASE. SEE RELATED ITEMS BELOW.

P	MODEL 01 - KIT BUILT-IN LOCKERS (Lift up hasp locker Kit)	04
Q	MODEL 02 - KIT BUILT-IN LOCKERS (Electronic locker Kit)	04

Mounting cabinets to the wall

1. Make sure that the area where the cabinets and their bases will be installed is plumb and level.
2. Check the ventilation spacing between the back of the cabinets and ensure that the side panels have been properly installed. Align the cabinets to secure them to the wall. The side panels must fully touch the wall.
3. Fold the metal plate and install it on top of the cabinets as shown below.

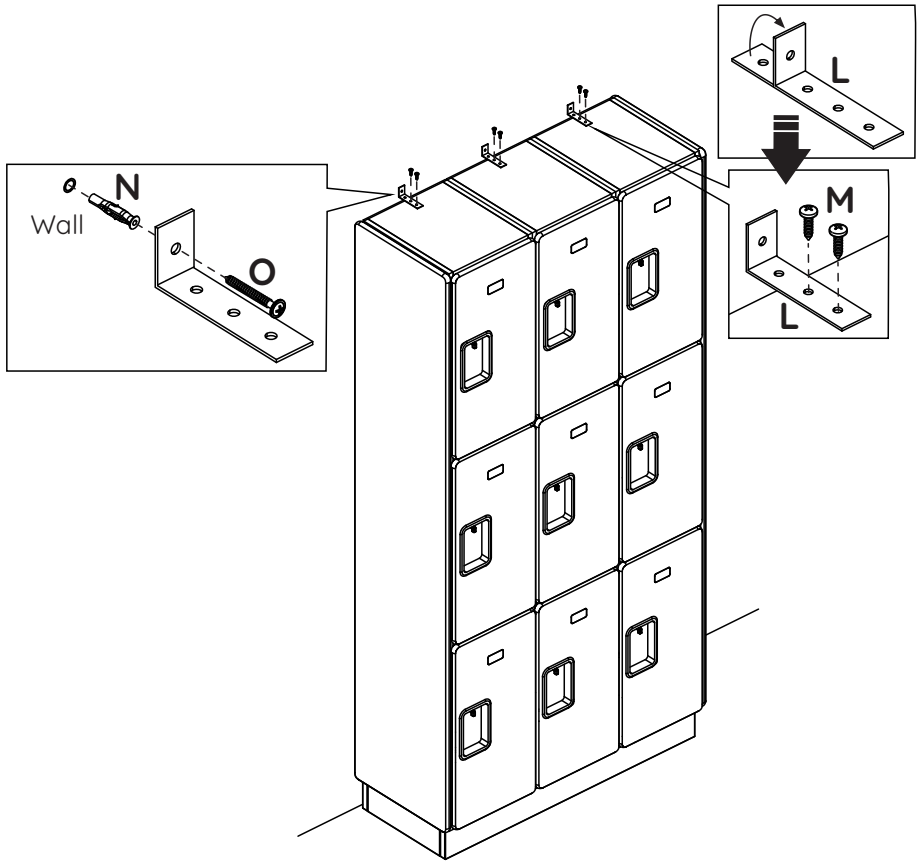

KIT TO AVOID TIPPING

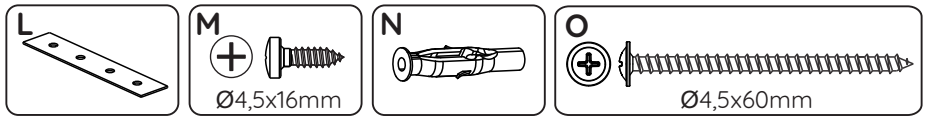

Back-to-back cabinet installation

1. Make sure that the area where the cabinets and their bases will be installed is plumb and level.
2. Check the ventilation spacing between the back of the cabinets and ensure that the side panels have been properly installed. Align the cabinets to secure them back-to-back. The side panels must fully touch each other.
3. Install the metal plates on top of the cabinets as shown below.

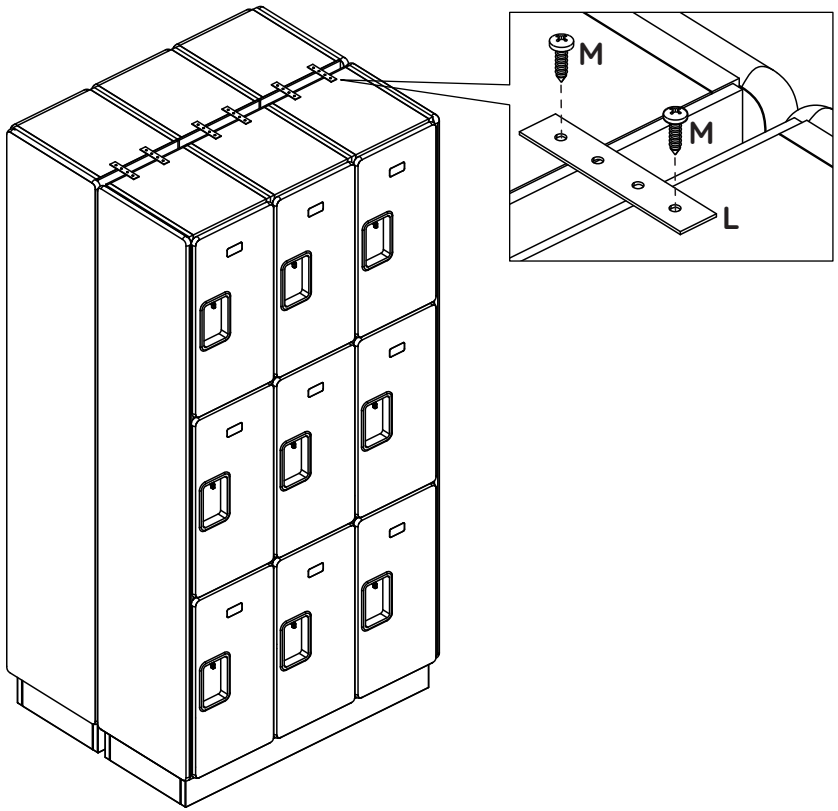

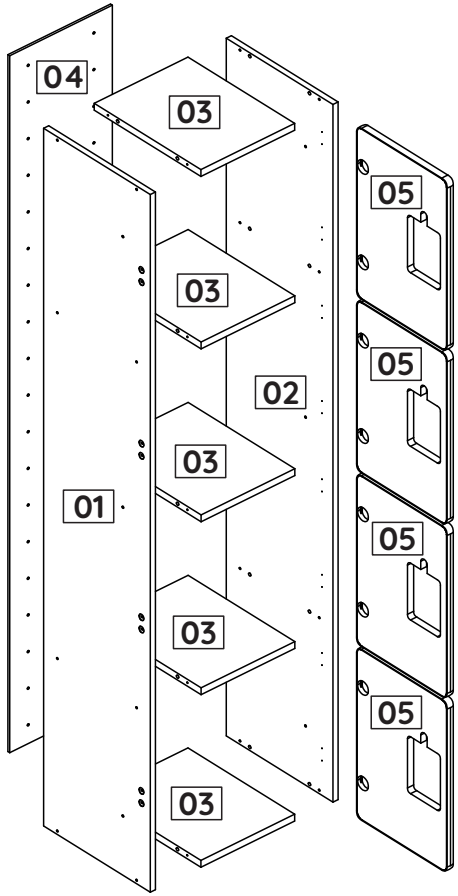

ID	Description	# Of Pieces	Dimension (mm)
01	Left side	01	1828x350x15
02	Right side	01	1828x350x15
03	Shelf	05	274x350x18
04	Back	01	1826x300x6
05	Door	04	444x293x18

KIT TO AVOID TIPPING

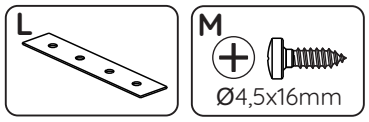

1 Step

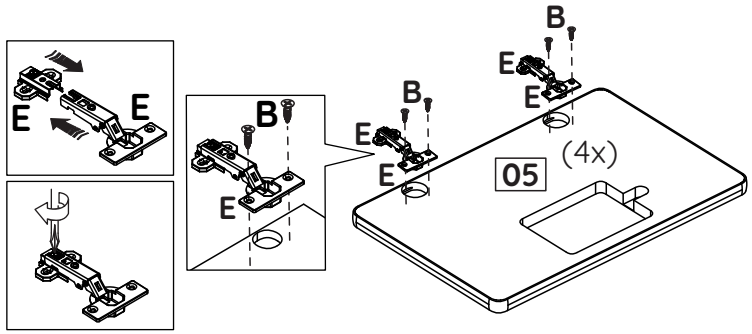

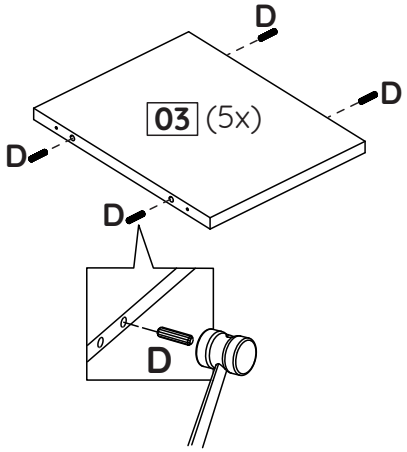

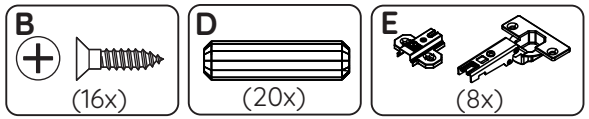

Side panel installation (add-on sold separately)

1. Make sure that the area where the cabinets and their bases will be installed is plumb and level.
2. Position the side panels so that they're aligned with the front of the cabinet body (not the door) ***Check-01***. The spacing created between the end of the panel and the back of the cabinet is for ventilation ***Check-02***.
3. After they are positioned, use the hardware that comes with the side panel to join them through the existing holes inside the cabinet wall as shown below.

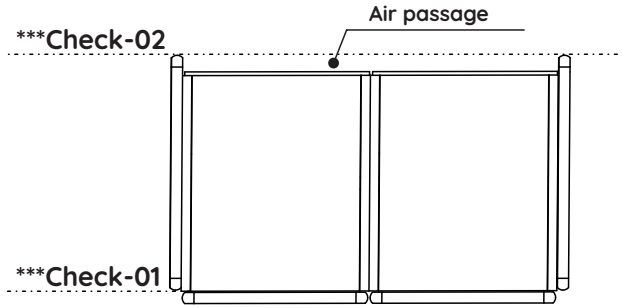

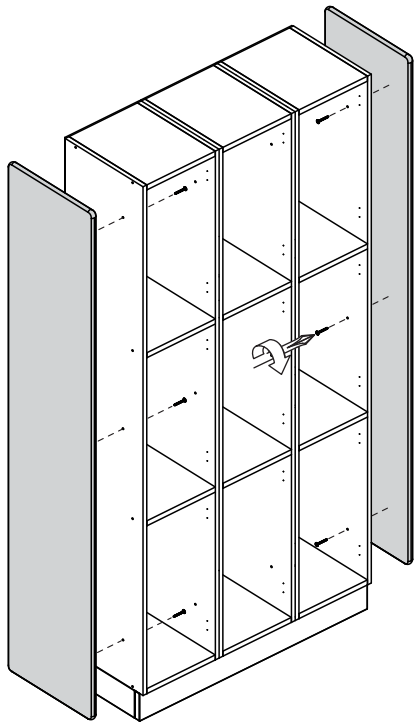

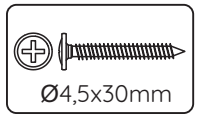

Corporate assembly

Join cabinets

1. Start by positioning the cabinets side by side, ensuring they are plumb and level.
2. After they are positioned, use hardware (H) to join them through the existing holes inside the cabinet wall, as shown below.

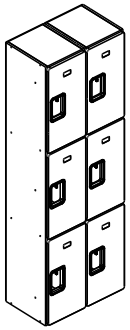

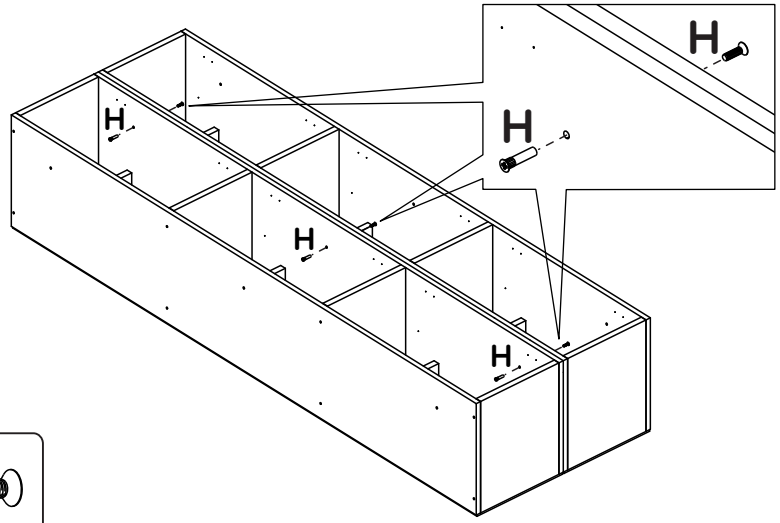

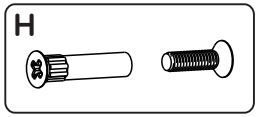

Metal base installation **(add-on sold separately)**

1. Make sure that area where the cabinets and their bases will be installed is plumb and level.
2. Position the metal base, aligning and centering it on the body of the previously joined cabinets.
3. After they are positioned, use the hardware that comes with the metal base component to join the parts on to the metal base to the cabinet base, as shown below.

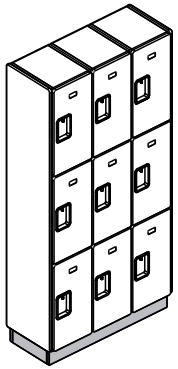

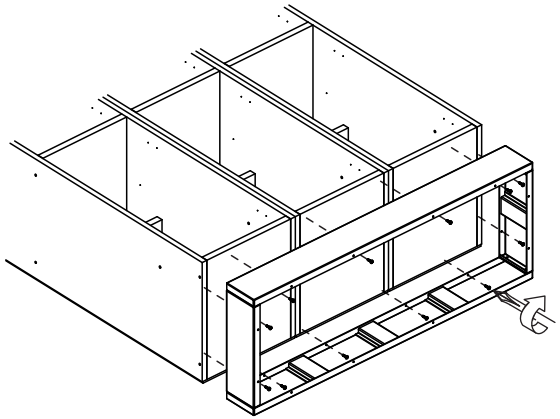

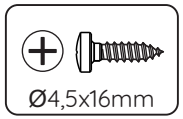

2 Step

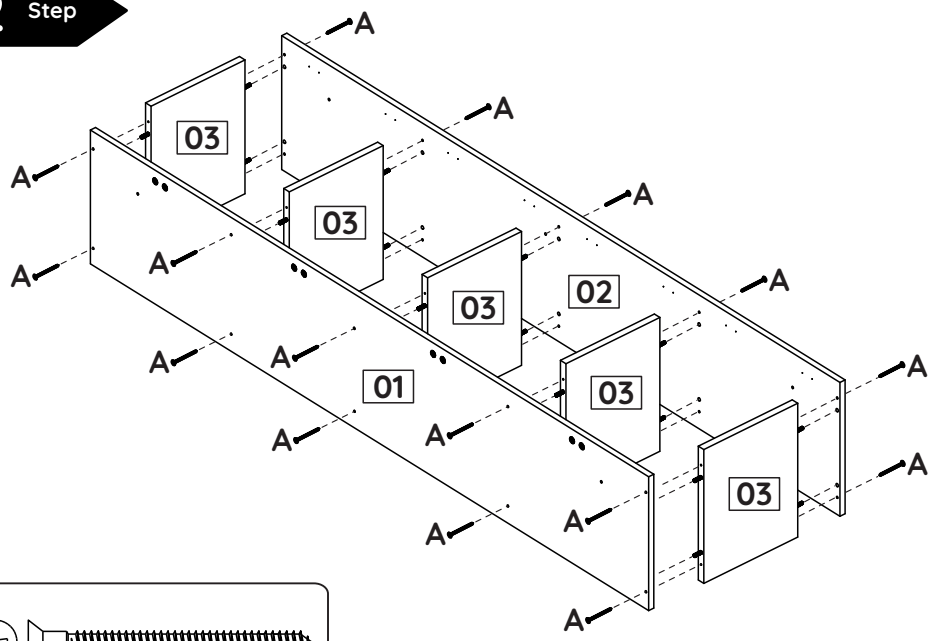

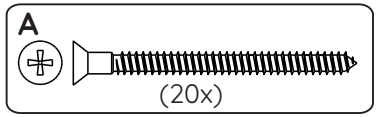

3 Step

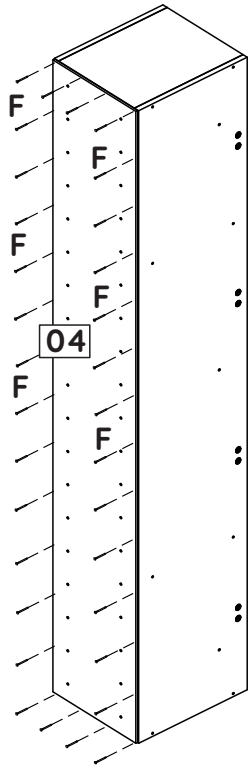

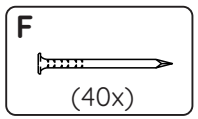

4 Step

Name plate

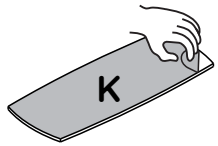

Remove the adhesive tape and then stick it in the indicated place on the furniture.

Three-dimensional door hinge adjustment: follow the instructions below.

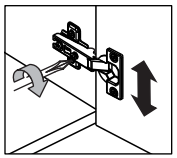

Upward and downward height adjustment

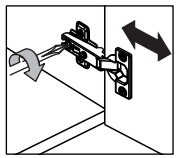

Sideways adjustment

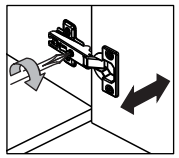

Backward and forward depth adjustment

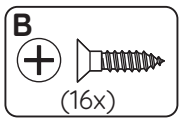

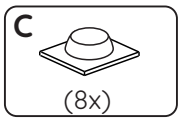

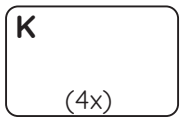

5 Step

OPTIONAL BUILT-IN LOCKS

MODEL 01 - KIT BUILT-IN LOCKERS (Lift up hasp locker Kit)

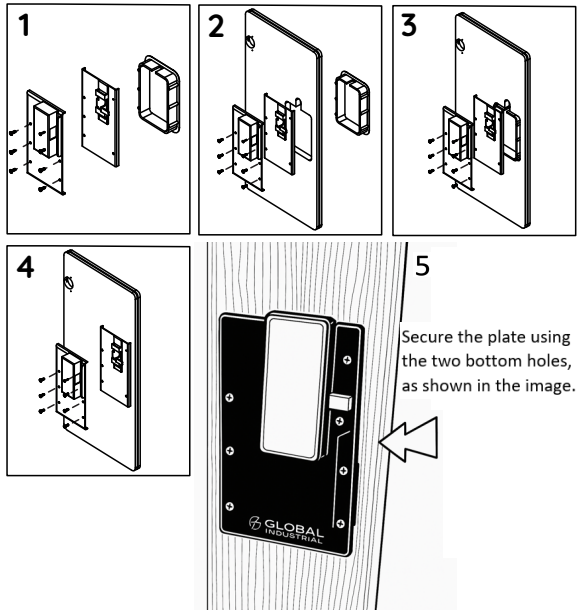

Fastening latch

Note: latch is part of the lock

Install the latch

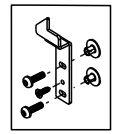

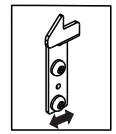

Sideways adjustment

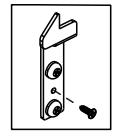

Install the security screw

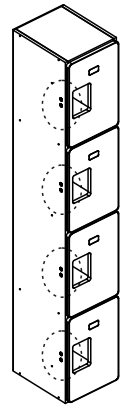

OPTIONAL BUILT-IN LOCKS

MODEL 02 - KIT BUILT-IN LOCKERS (Electronic locker Kit)

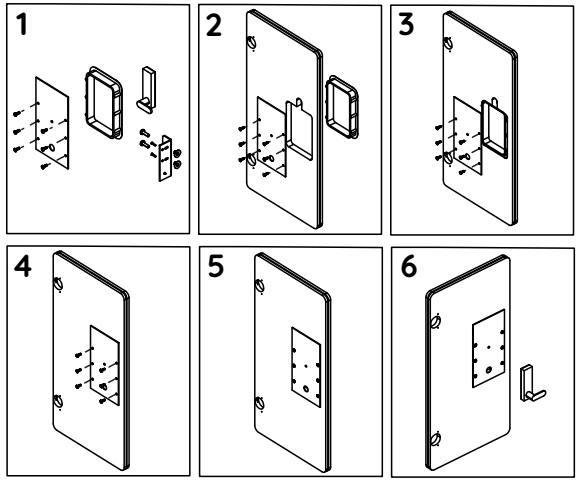

Fastening latch

Note: latch is part of the lock

Install the latch

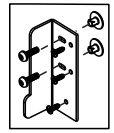

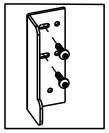

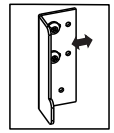

Sideways adjustment

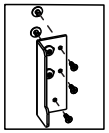

Install the security screw

