GLOBAL™ INDUSTRIAL
We can supply that.

User's manual	Manual del usuario	Manuel de l'utilisateur
Customer Service US: 1-800-645-2986	Servicio de atención al Cliente US: 1-800-645-2986	Service à la clientèle Canada: 888-645-2986

Single Wide Locker Assembly

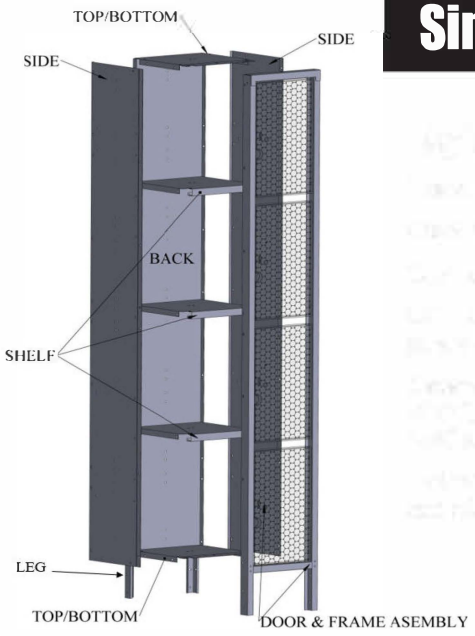

Before Assembly

Please read the complete instructions.

Check for missing or damaged parts.

Only use the specified hardware.

CAUTION: Some parts have sharp edges and corners, wear gloves during assembly.

Assembly will require the following tools:

- 2 drift pins (or 2 nail punches) for hole alignment
- 3/8" socket wrench

Lockers should be assembled on a flat, level surface and anchored according to the instructions found in Section 6.

Two people are required to remove the side panels from the packaging, with one person at each end



Locker Assembly

1. Bolt together top and bottom with bends facing down and the back with the bends facing up. Top and bottom are identical.

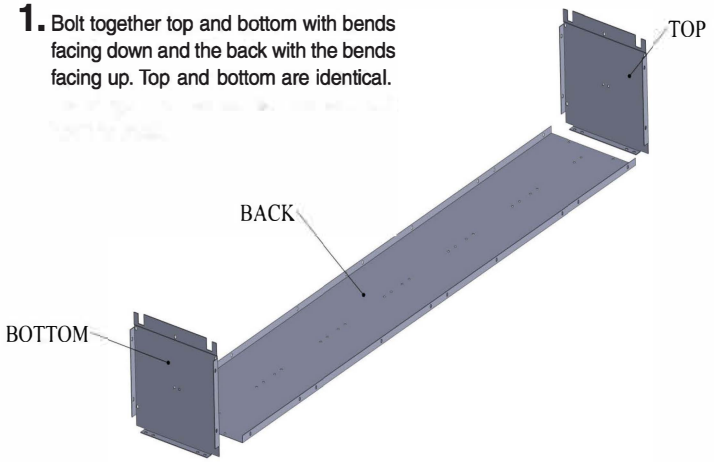

2. Bolt on side with bend in rear and facing in. Omit 2 bolts near bottom rear for legs.

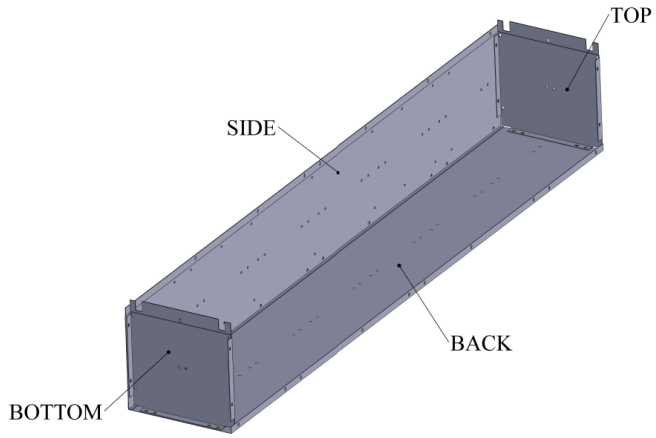

3. Bolt on other side with rear bend facing in.

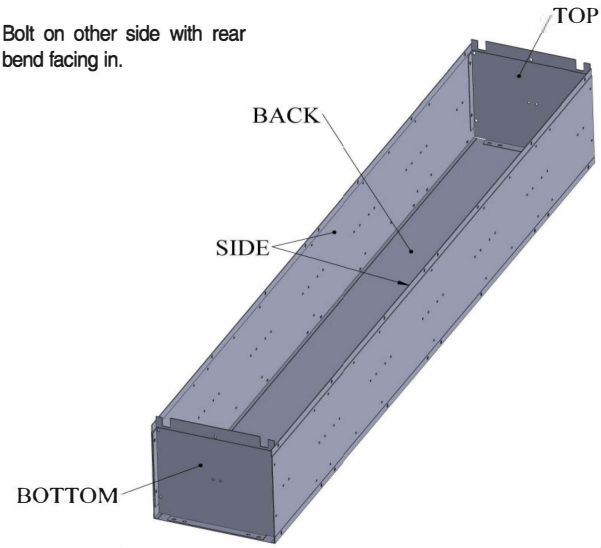

4. Bolt on hooks and coat rod inside locker on top, back and side panels.

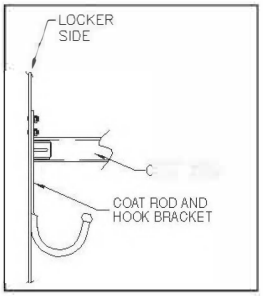





Coat Rod

5. Install Rear Legs
Insert one rear leg into each end of the locker. Secure each leg using two bolts.
Attach Door Frame Assembly
Attach the door frame to the locker.
Install Shelves
After the door frame has been attached, secure the sides of the shelves to the locker using bolts. Fasten the front of the shelves to the door frame using screws.

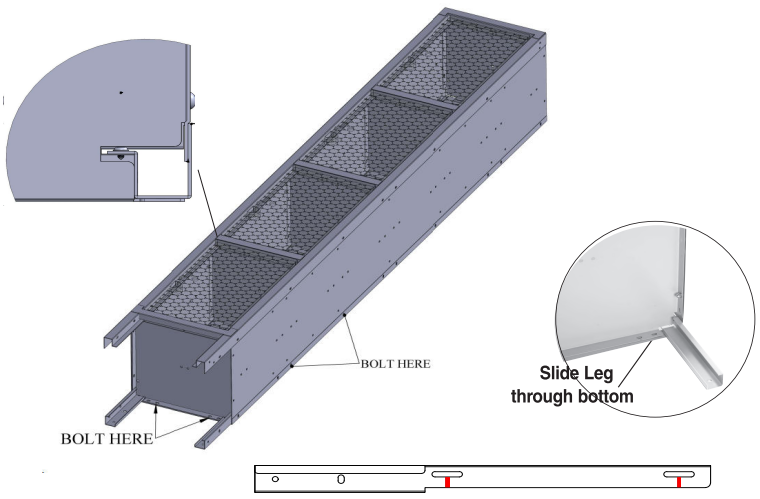

Install bolt and nut at the red-lined locations only if the floor is even.

6. Assemble the Locker Feet
Bolt each locker foot to the leg of the locker.
Stand the locker upright in its final location.
Use a level to ensure it's even.
Adjust the rear legs so they touch the floor.
Tighten all bolts securely.

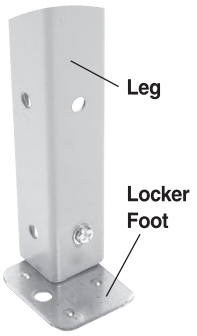

Anchor Lockers to the Floor
Individual Lockers: Use the locker foot on all four legs to anchor to the floor (floor anchors not included).
Locker Banks: Anchor the lockers at the two extreme ends.
Anchor intermediate lockers at maximum 36-inch (91 cm) intervals.

WARNING:
–FLOOR ANCHOR MUST HAVE A MINIMUM PULL-OUT VALUE OF 190 LBS.
–WALL ANCHOR MUST HAVE A MINIMUM PULL-OUT VALUE OF 150 LBS.

7. Punching Patterns

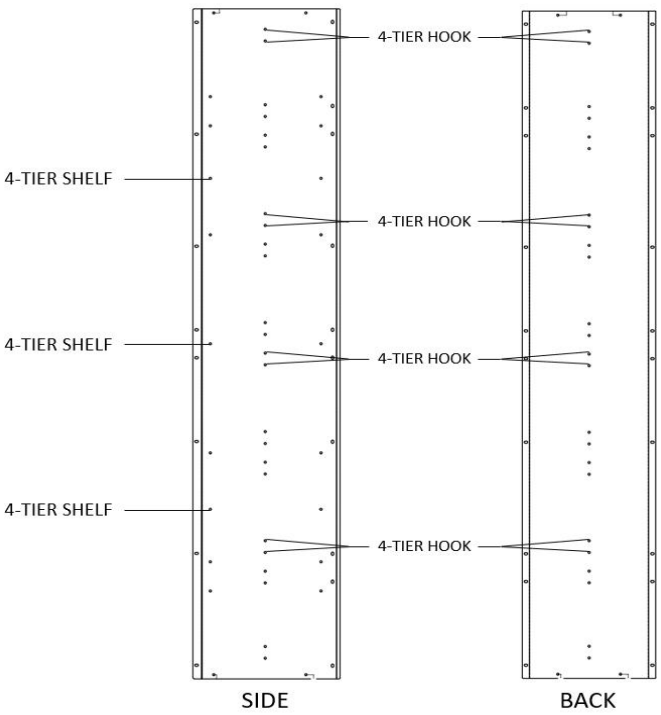

For Non-Digital Lock Version

Place the hasp lock in the mounting position as shown below on the door frame. Use the bolts to secure it to the door frame, and tighten it with the nuts.

