

Business • Education • Facility Supplies
FilingSupplies.com

FilingSupplies.com | 800-810-3453

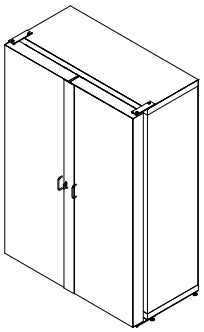

KD BIN CABINET
ASSEMBLY INSTRUCTION

CONTENTS		
REF.	QTY.	DESCRIPTION
1	1	BOTTOM
2	1	BACK PANEL
3	1	LEFT SIDE PANEL
4	1	RIGHT SIDE PANEL
5	1	TOP
6	4	FRONT STIFFENER
7	1	LEFT DOOR
8	1	RIGHT DOOR
9	2	HANDLE

CONTENTS		
REF.	QTY.	DESCRIPTION
H1	4	
H2	80	
H3	80	
H4	4	
H5	4	
H6	4	

CONTENTS		
REF.	QTY.	DESCRIPTION
H7	2	
H8	2	
H9	4	
H10	4	
H11	1	

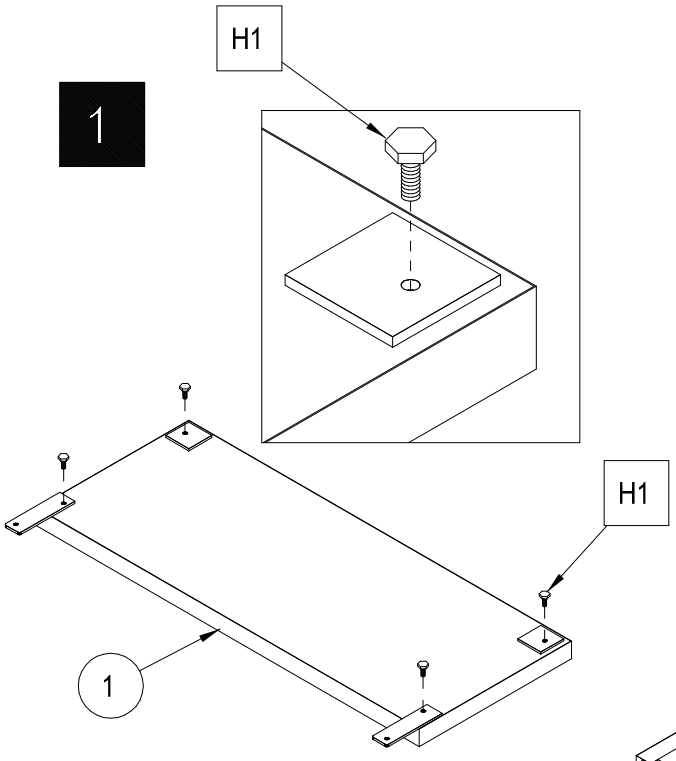

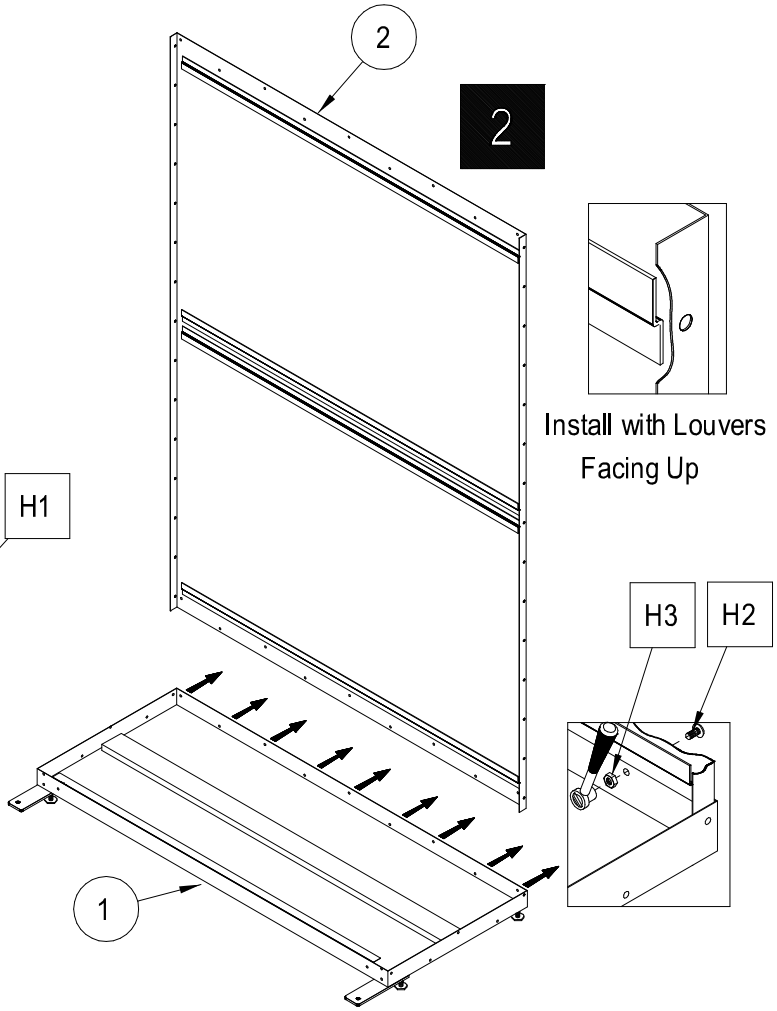

Install with Louvers Facing Up

NOTE:

Use H2 and H3 where indicated by Arrow

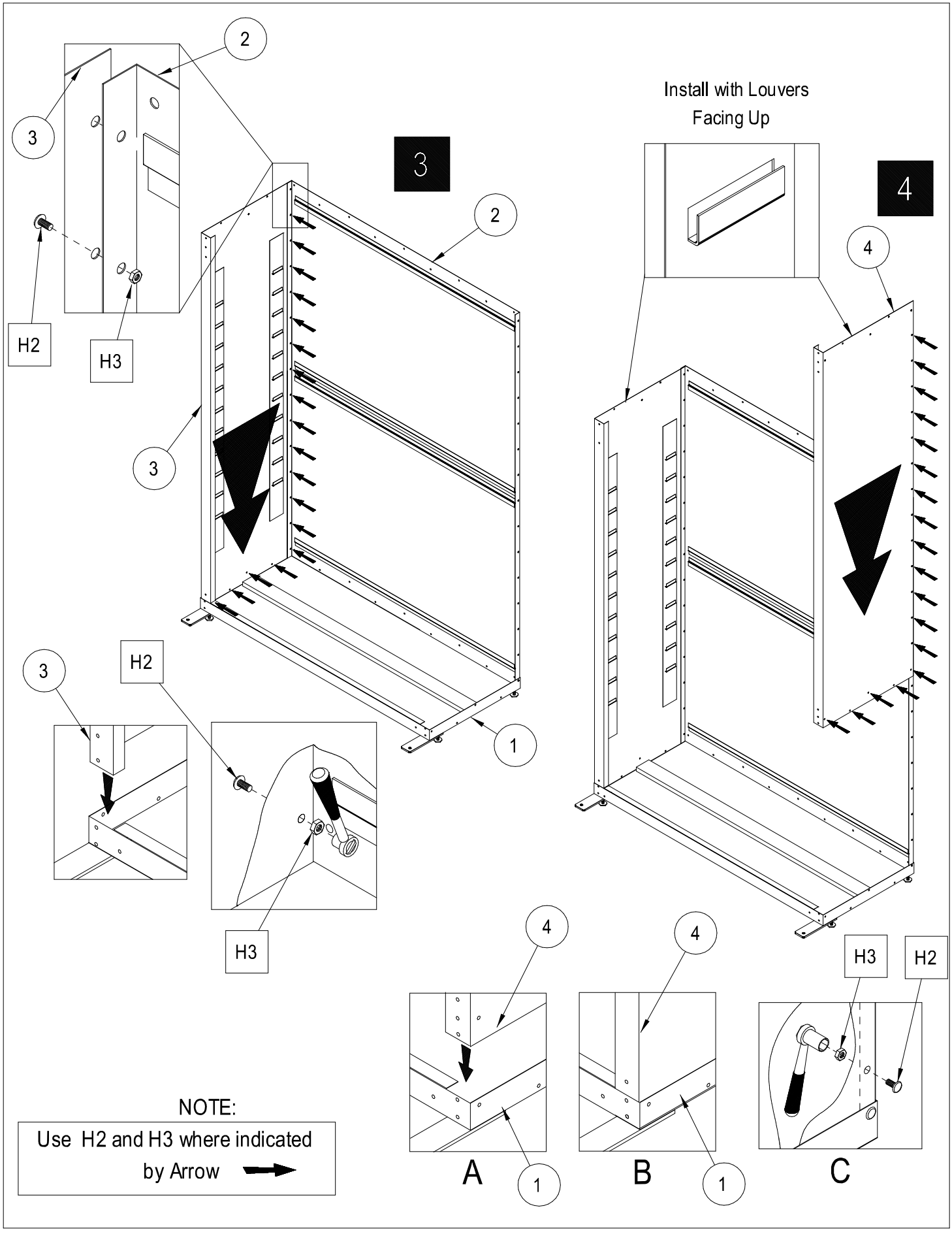
3
2
3
H2
H3
2
3
1
3
H2
H3
Install with Louvers
Facing Up
4
4
4
4
H3
H2
A
1
B
1
C
NOTE:
Use H2 and H3 where indicated
by Arrow

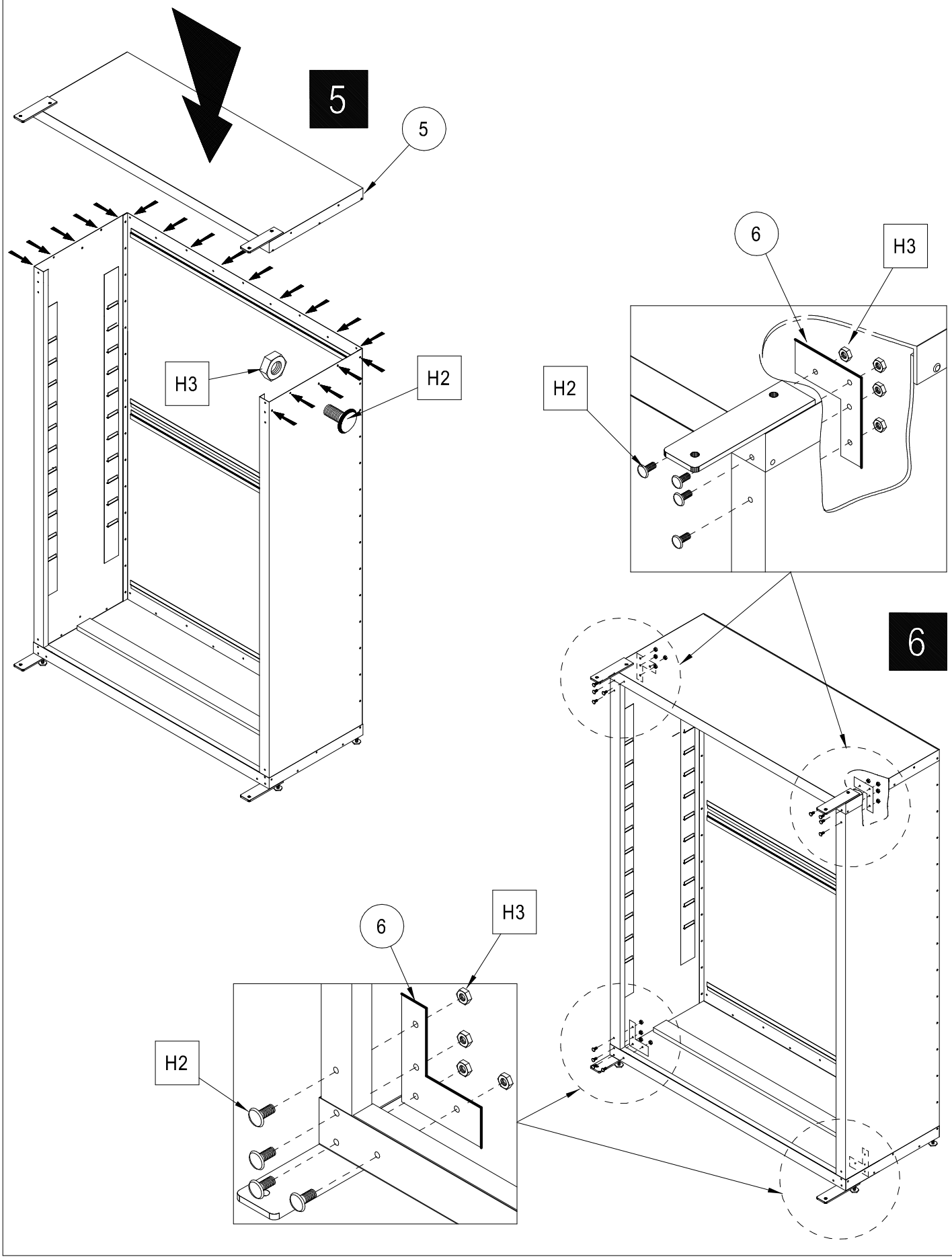
5
5
H3
H2
6
H3
H2
6
6
H3
H2

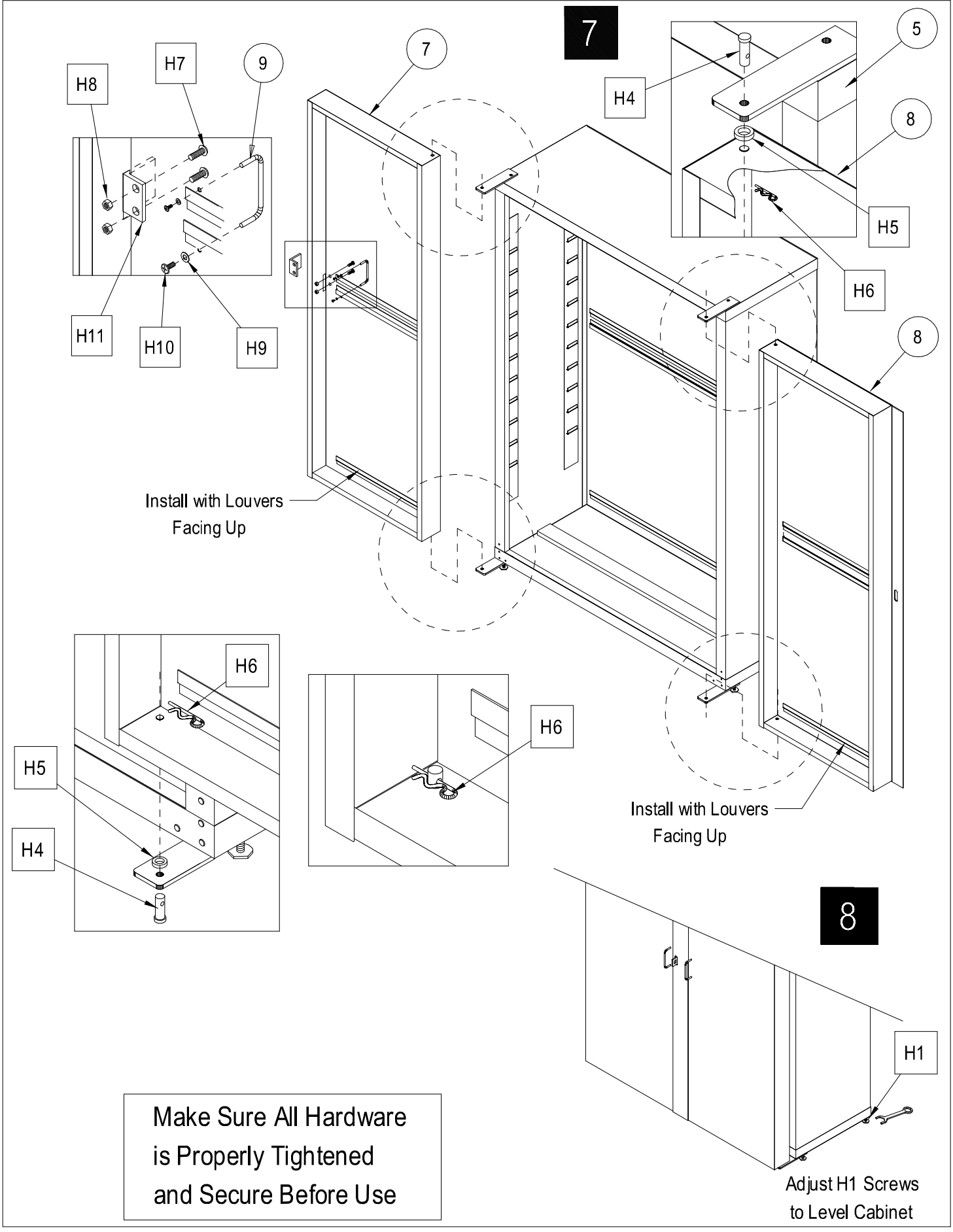
7
H8
H7
9
H11
H10
H9
7
H4
5
8
H5
H6
8
Install with Louvers
Facing Up
H6
H5
H4
H6
Install with Louvers
Facing Up
8
H1
Adjust H1 Screws
to Level Cabinet
Make Sure All Hardware
is Properly Tightened
and Secure Before Use

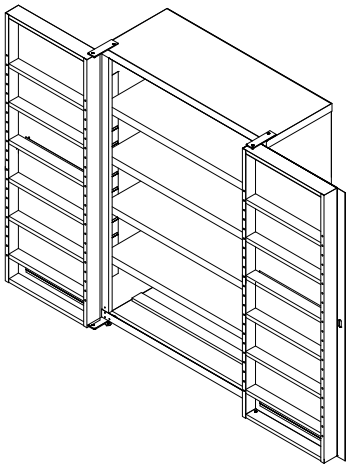

FilingSupplies.com | 800-810-3453

KD BIN CABINET
SHELF INSTALLATION

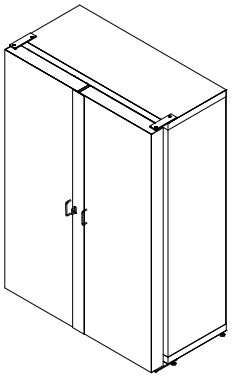

CONTENTS		
REF.	QTY.	DESCRIPTION
1	4	CABINET SHELF
2	12	DOOR SHELF
H1	24	
H2	24	

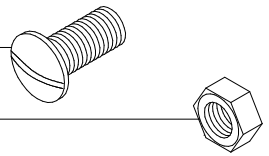

CABINET SHELF INSTALLATION

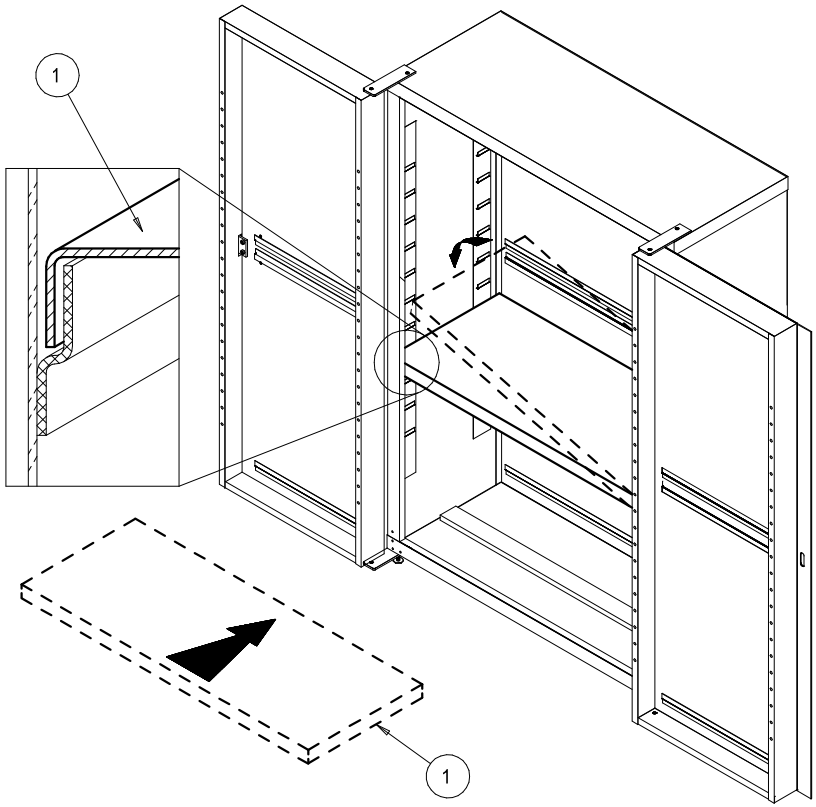

DOOR SHELF INSTALLATION

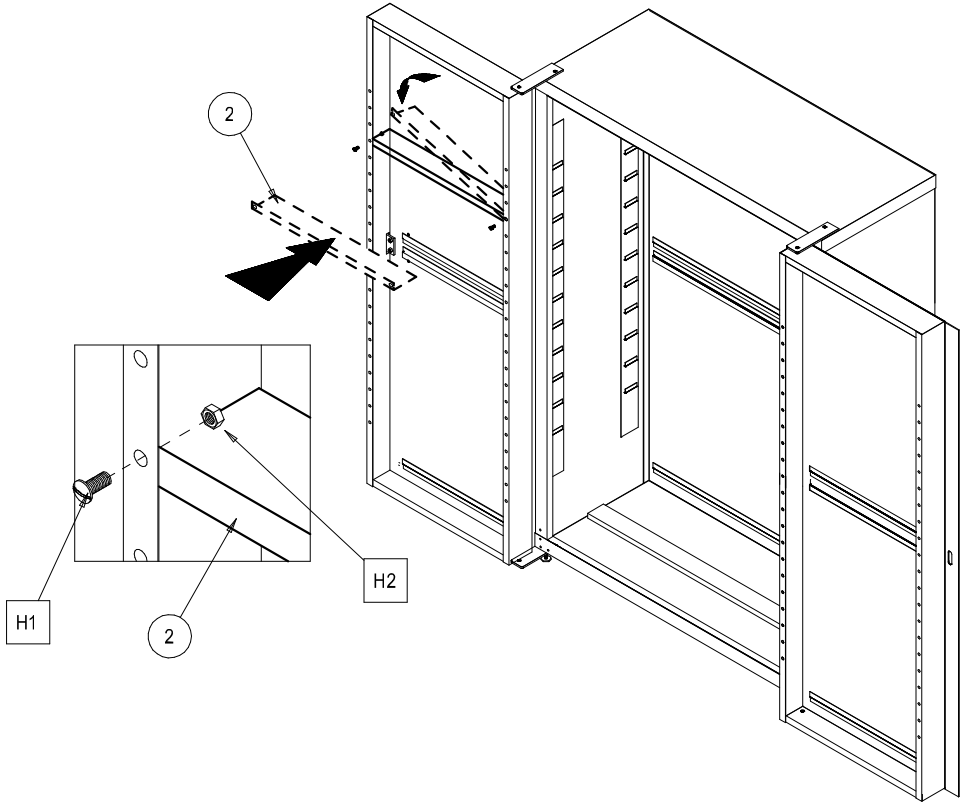

FS Workspace
Business • Education • Facility Supplies
FilingSupplies.com

FilingSupplies.com | 800-810-3453

THE ORGANIZER
HEAVY - DUTY CABINET
ASSEMBLY INSTRUCTION

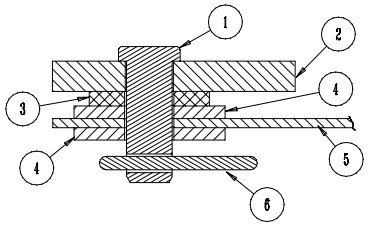

REF	DESCRIPTION
1	3/8 x 1" L CHAMFERED END ZINC PLATED CLEVIS PIN (USE PIVOT POINT CP-142 OR SIMILAR)
2	EXISTING 1/4" THK. STEEL PLATE
3	EXISTING 3/8" NYLON WASHER
4	1.25 OD x .406 ID x .1 THK ZINC PLATED STEEL WASHER (2 REQ'D PER HINGE LOCATION)
5	TOP EDGE OF EXISTING STEEL DOOR
6	5/32 x 1" L ZINC PLATED STEEL EXTENDED PRONG COTTER PIN

1

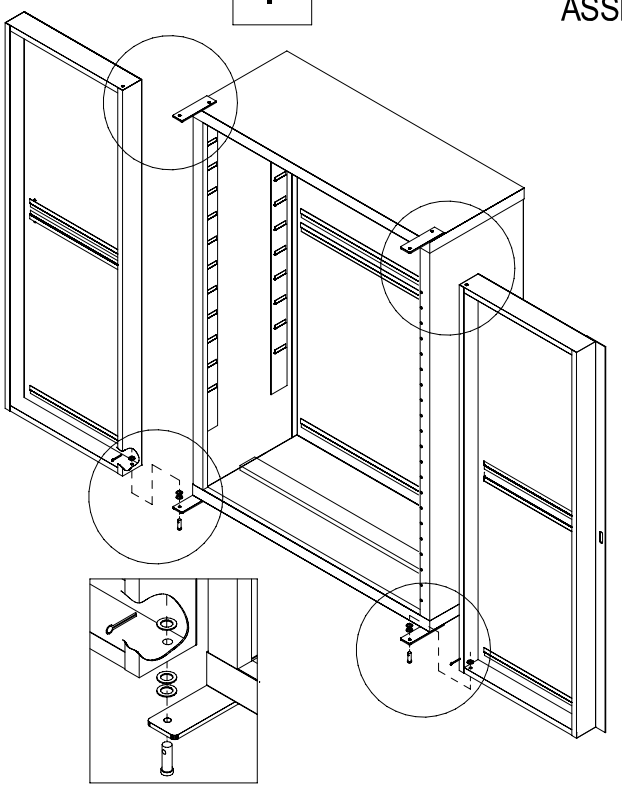

2

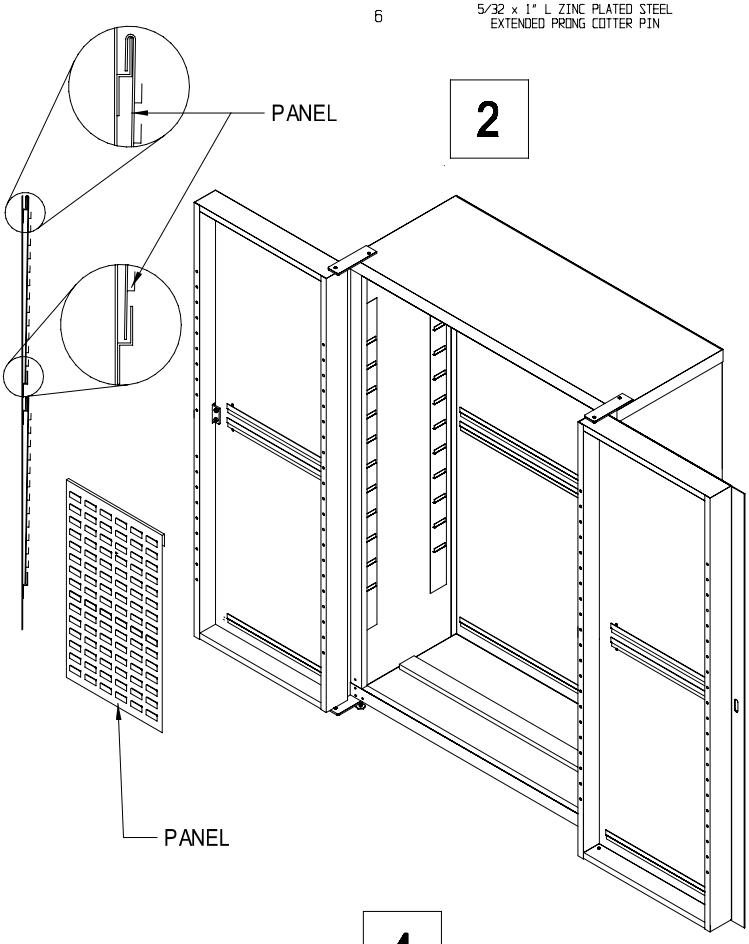

3

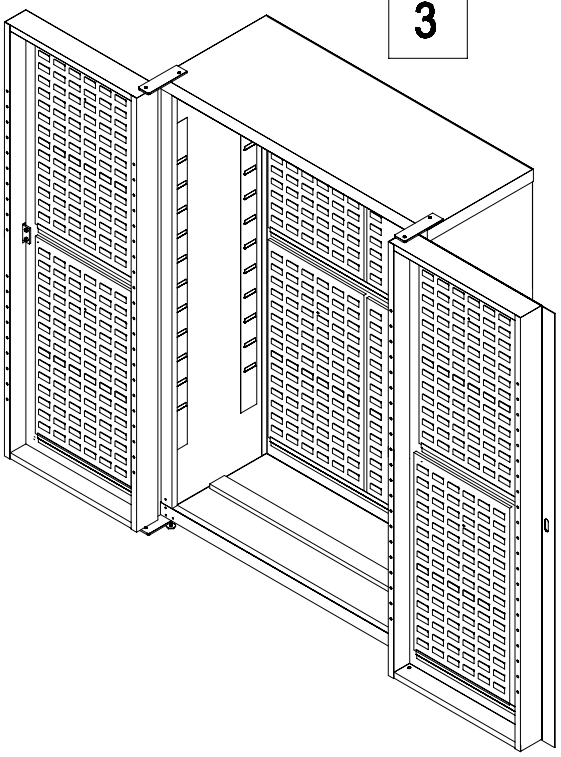

4

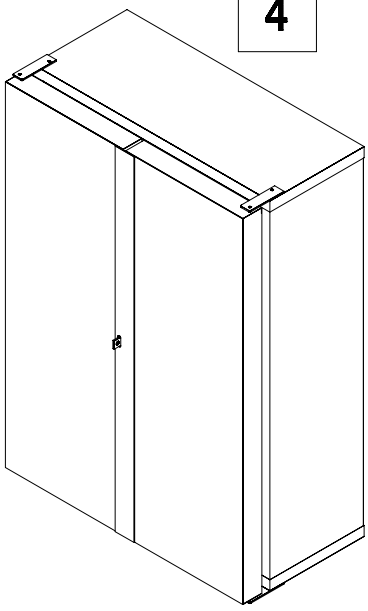

FS Workspace
Business • Education • Facility Supplies
FilingSupplies.com

FilingSupplies.com | 800-810-3453

THE ORGANIZER
HEAVY - DUTY CABINET

ASSEMBLY INSTRUCTION

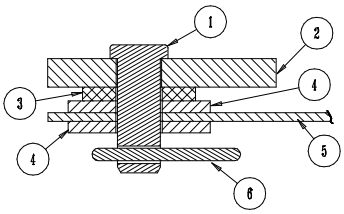

REF	DESCRIPTION
1	3/8 x 1" L CHAMFERED END ZINC PLATED CLEVIS PIN (USE PIVOT POINT CP-142 OR SIMILAR)
2	EXISTING 1/4" THK. STEEL PLATE
3	EXISTING 3/8" NYLON WASHER
4	1.25 OD x .406 ID x .1 THK ZINC PLATED STEEL WASHER (2 REQ'D PER HINGE LOCATION)
5	TOP EDGE OF EXISTING STEEL DOOR
6	5/32 x 1" L ZINC PLATED STEEL EXTENDED PRONG COTTER PIN

1

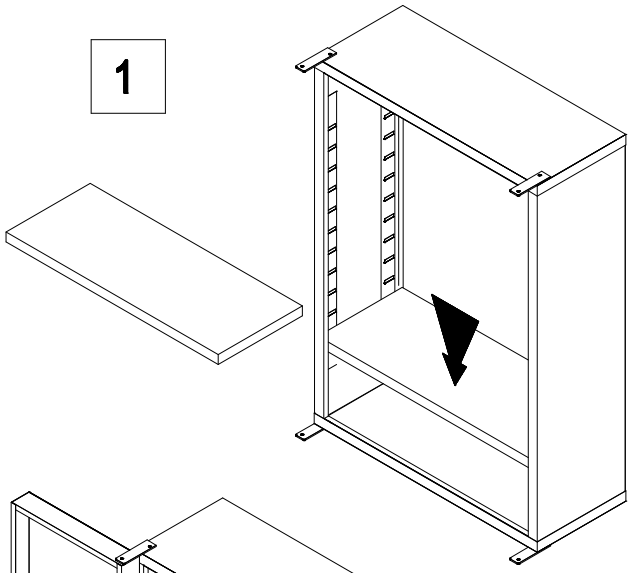

2

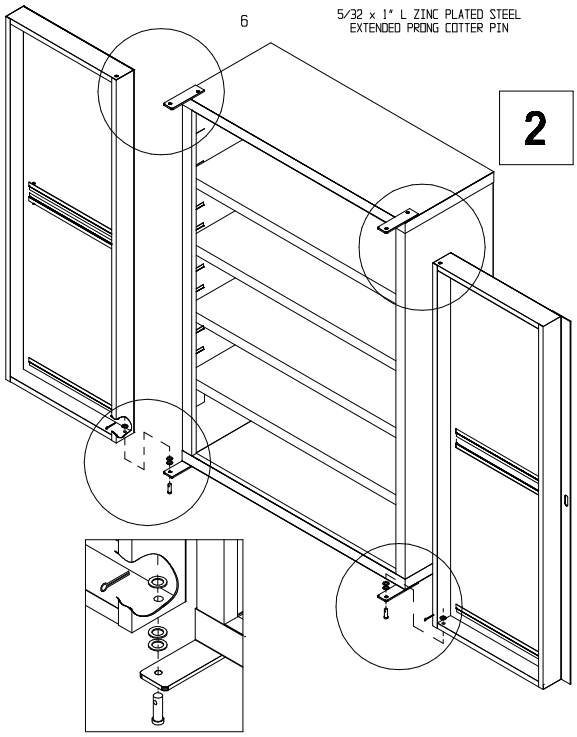

3

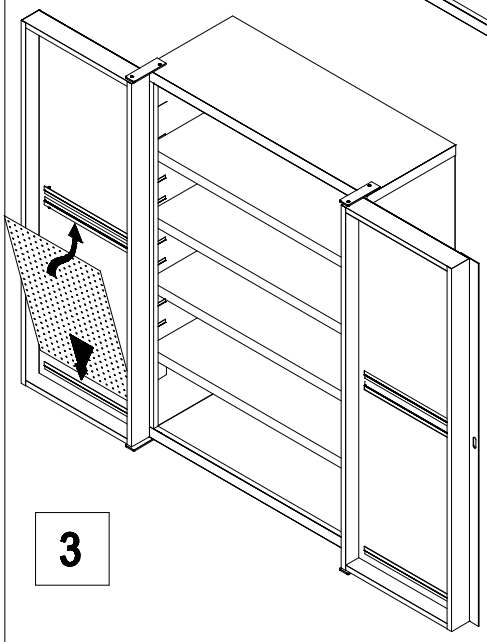

4

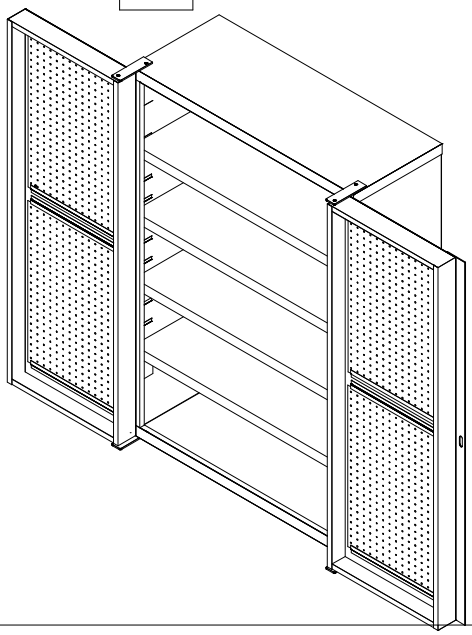

5

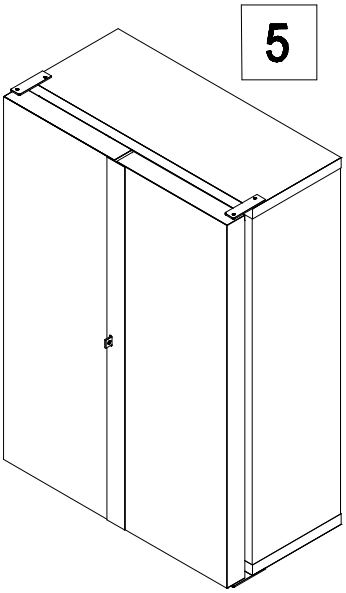

FS Workspace
Business • Education • Facility Supplies
FilingSupplies.com
FilingSupplies.com | 800-810-3453

SECURITY WORK STORAGE CENTER DRAWER MOUNTING KIT

MODEL 500CP39

This kit is used to mount the Storage Drawers into the Steel Cabinet.

CONTENTS

Ref#	Qty	Description
1	(2)	Front Rails
2	(2)	Back Rails
3	(4)	Cross Channels
4	(8)	1/4-20 Screws
5	(8)	1/4-20 Nuts
6	(4)	Spacer Bars

Instructions

1. Assemble the Left and Right mounting rail assemblies using 1 Front Rail (#1), 1 Back Rail (#2), 2 Cross Channels (#3) and (4) 1/4-20 Screws (#4) and 1/4-20 Nuts (#5) for each.

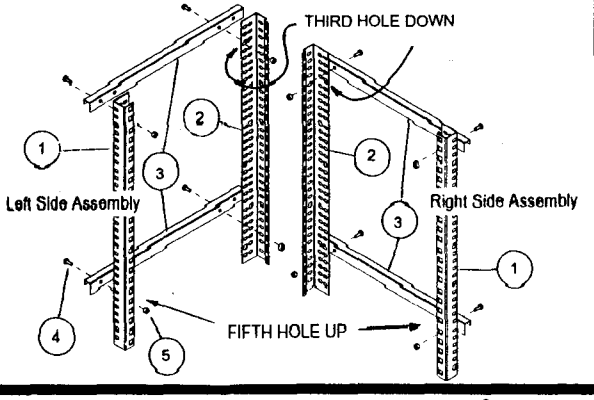

2. A) Hang the Left Side assembly onto the 2nd and 6th set of Louvers on the Left side of the Cabinet (counting from the bottom).

B) Repeat for the Right Side Assembly.

C) Install a Spacer Bar (#6) behind each Cross Channel.

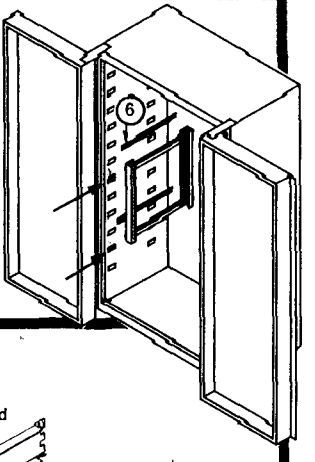

3. A) Identify the Left (L) and Right (R) Drawer Slides packaged with the Drawers (cut-out should be on top and in front).

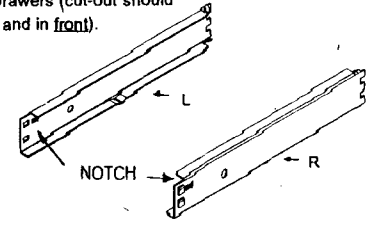

B) Attach the Left Drawer Slide (L) flush with the bottom of the Mounting Rail assemblies by sliding rear tabs into notches on Back Rail and securing the front with (2) 1/4" x 1/2" Flat Head Screws.

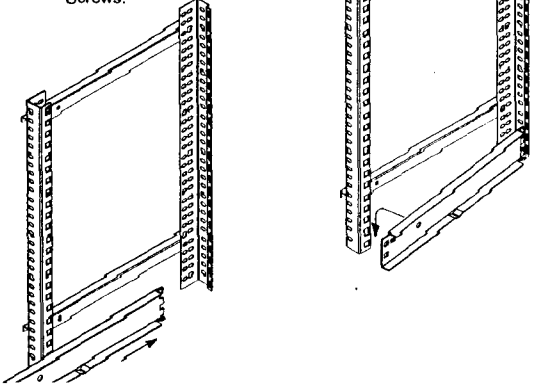

4. Similarly attach additional Drawer Slides, leaving a space which corresponds to the Drawer size you are using (i.e., leave a 6" space for a 6" high Drawer, and a 5" space for a 5" high Drawer.)

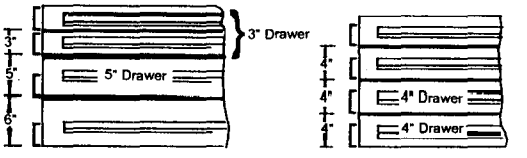

5. A) Slide the Drawer carriage into the Drawer Slides. (Notice that the brake lever functions automatically. If you can remove the carriage without releasing the brake, then you probably inverted the Left and Right Drawer Slides installed in step 3. Remember, the cut-out should face up, not down.

B) Slide the Drawers into the carriages.

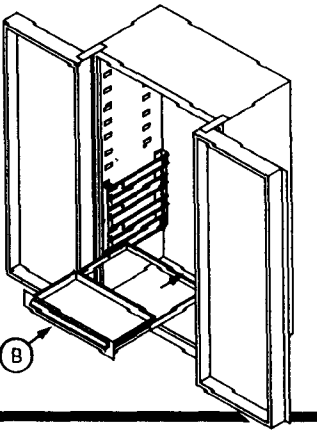

6. Place the worksurface on top of the Drawer Mounting Rail assemblies.

