Global Industrial Air Tank, 30Gal., 175PSI, ASME Certified

Model No. 133780

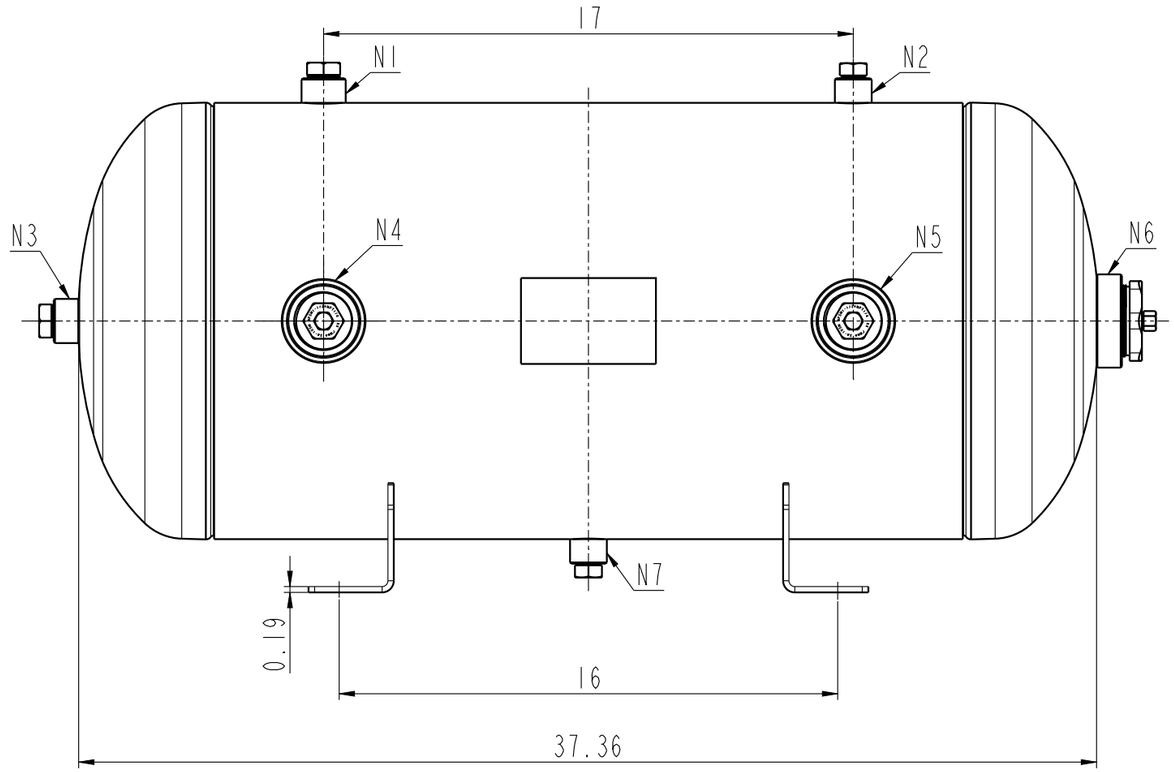

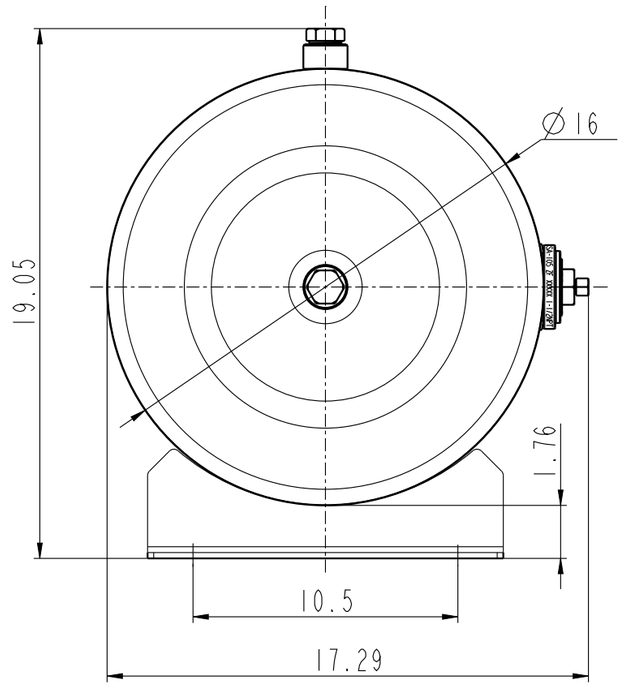

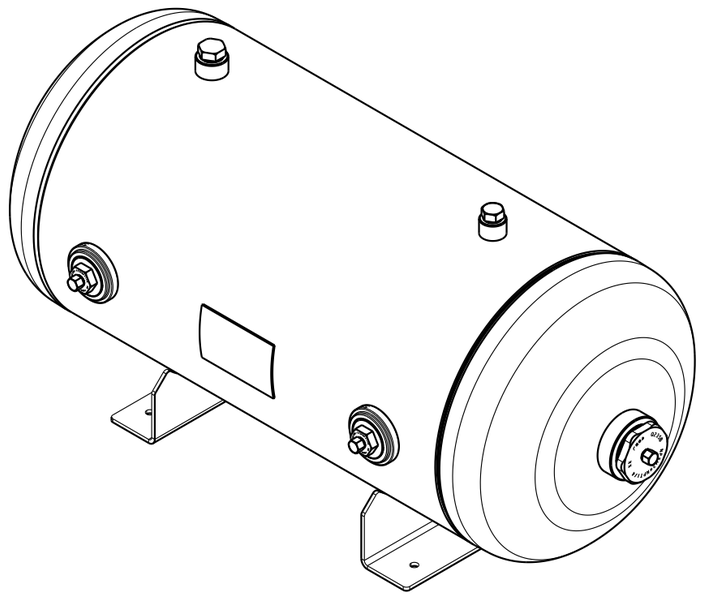

NOZZLE SCHDULES				
MARK	NOZZLE O.D.X WALL (inch)	CONNECTION STANDARD	CONNECTION FACE	USE TO
N1	∅1.42×0.19	NPT3/4"	FEMALE THREAD	INLET/OUTLET HOLE
N2	∅1.18×0.17	NPT1/2"	FEMALE THREAD	INLET/OUTLET HOLE
N3	∅1.42×0.19	NPT3/4"	FEMALE THREAD	INSPECTION HOLE
N4、N5	∅2.68×0.39	NPT1-1/2"	FEMALE THREAD	INLET/OUTLET HOLE
N6	∅2.99×0.31	NPSM2"	FEMALE THREAD	INSPECTION HOLE
N7	∅1.18×0.17	NPT1/2"	FEMALE THREAD	DRAIN HOLE