FS Workspace
Business • Education • Facility Supplies
FilingSupplies.com
FilingSupplies.com | 800-810-3453

OPEN INDUSTRIAL SHELVING

Tools Required:

- 7/16" nut driver or socket
- Flathead screwdriver.
- Requires two people for assembly.
- Approximate assembly time: 15 to 30 minutes per unit.

Note: Number of shelves per unit varies depending on unit purchased.

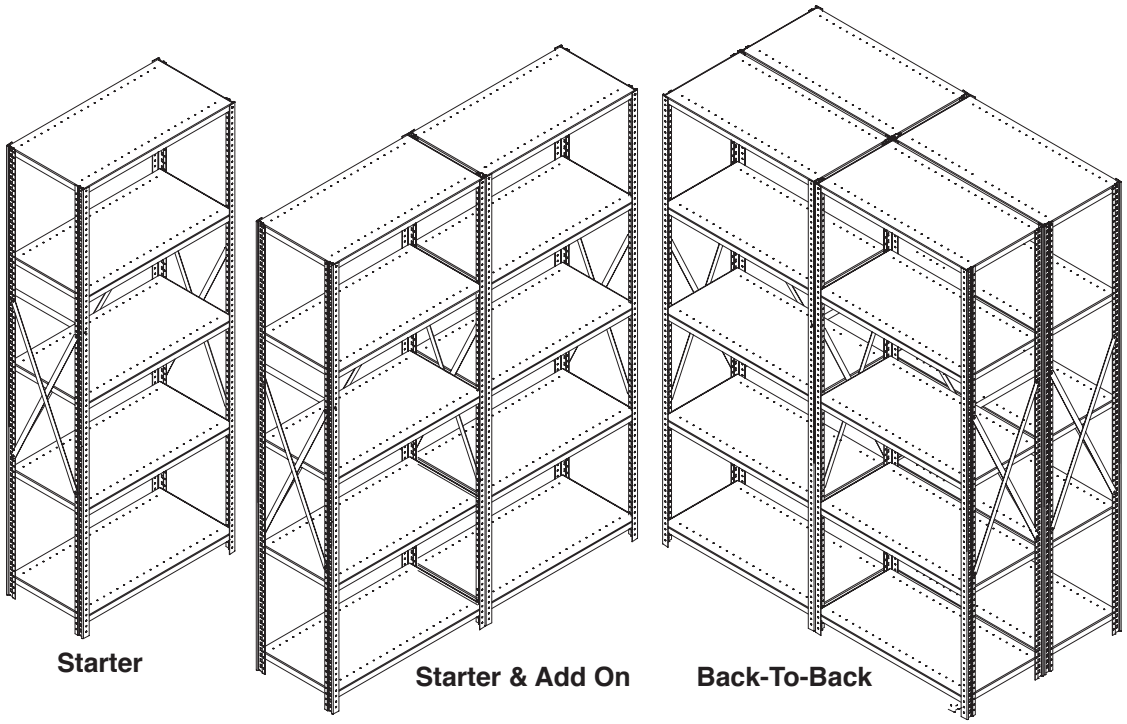

Starter | Starter & Add On | Back-To-Back

1. Create the right side of the shelving units by laying two uprights side-by-side on a flat surface. Be sure that the short side of the uprights is facing up, as shown in Figure 1.

Important: One side of the uprights is longer that the other, and contains two sets of holes. When laying the uprights side-by-side, this long side should be on the floor, and the short side should be facing up.

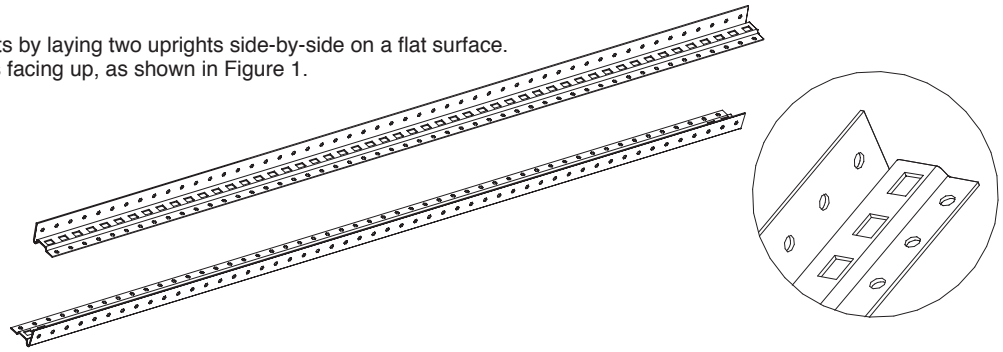

2. Attach the two side sway braces, beginning in the 20th hole from the top of each upright (approximately 20" from the top), using two 1/4"-20 x 5/8" bolts and nuts. The side sway braces attach to the longer side of the uprights (the side with two sets of holes). Bolt the braces into the small holes near the edge of the uprights as shown. Note the hole pattern of two round holes and then one square hole, repeating every 3", which should help facilitate proper placement of the bolts. Finger tighten only at this point.

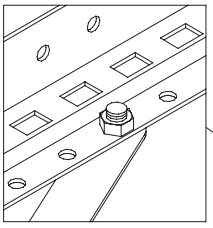

3. Attach the other end of both sway braces. The information below will tell how many holes should be between the top and bottom of the sway braces. Count the holes carefully, as an incorrect count will cause the upright to be the wrong depth to hold the shelves.

Unit Depth	Brace Length	Distance Between Bolts
12"	30"	27 holes (27 1/2")
18"	30"	24 holes (24 1/2")
24"	30"	19 holes (19 1/2")
30"	30"	10 holes (10 1/2")

4. Repeat steps 1-4 for the left uprights.

You should now have complete left and right sides of your shelving unit, with sway brace bolts and nuts still finger-tightened only.

5. Have an associate hold one upright on it's side while you bolt the bottom shelf on each post, as shown below.

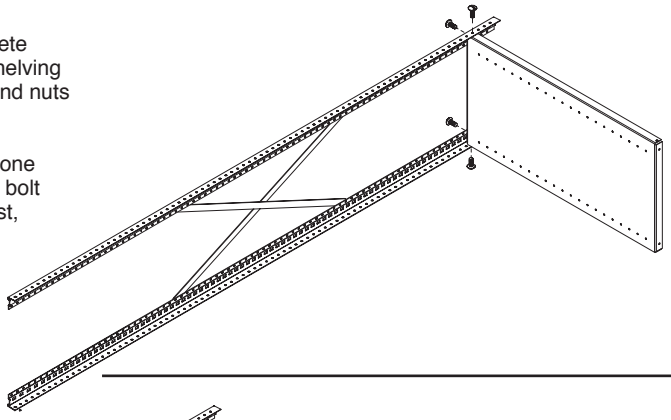

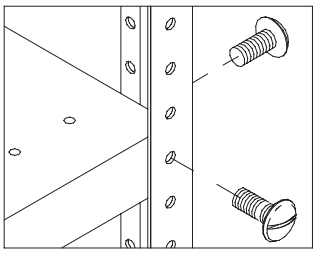

6. Bolt on other upright to bottom shelf.

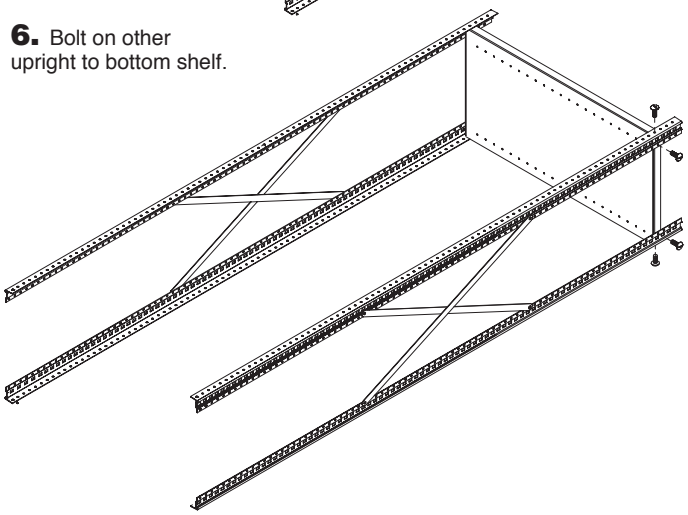

7. Bolt the top shelf, flat side up, into the top holes of both uprights.

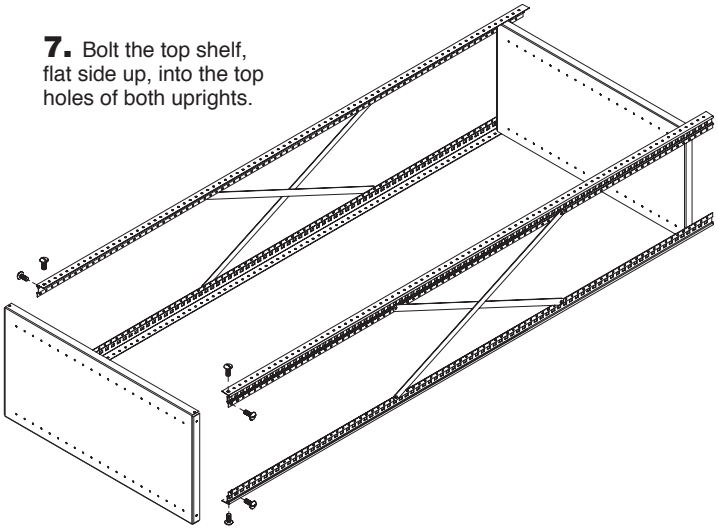

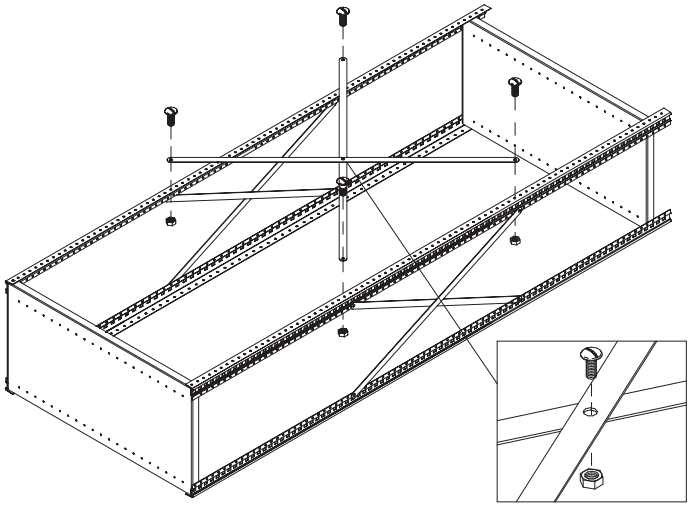

8. While unit is still lying down, bolt the rear sway braces on the back of the unit, using five ¼"-20 x ⅝" bolts and nuts, as shown. Again, the top of the sway braces should be in the 20th hole from the top of each upright (approximately 20" from the top). The chart below will help you determine the proper number of holes between the top and bottom of the sway braces. **Note that the hole count includes the holes that will contain the bolts.**

Unit Width	Brace Length	Distance Between Bolts
36"	52"	36 holes (36½")
48"	52"	20 holes (20½")

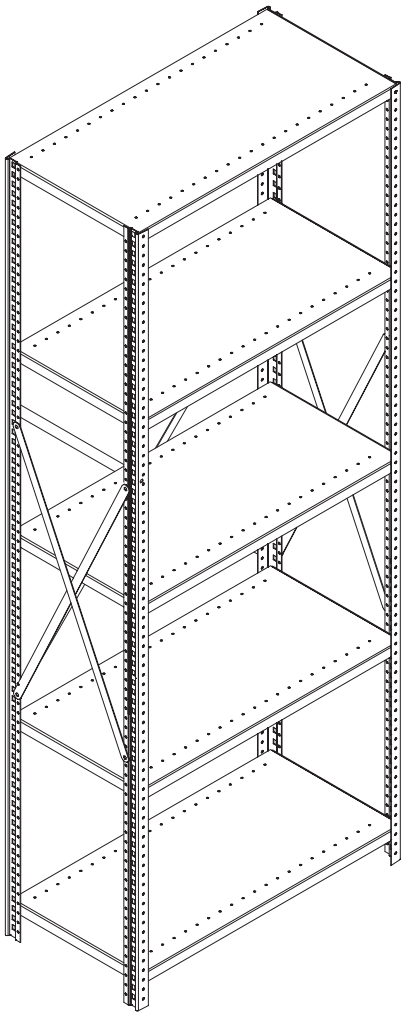

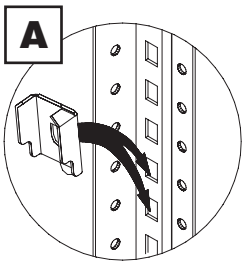

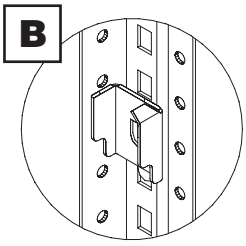

9. Stand unit up and position shelf clips evenly around the uprights according to your desired shelf heights. Place the shelves over the clips.

Please Note: Some shelves, depending upon placement, could possibly require temporary removal of one end of a sway brace in order to insert the shelf.

10. Tighten all bolts and nuts on the rear and side sway braces.

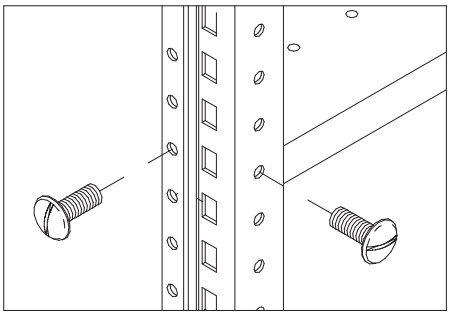

11. For added strength and reinforcement, place two $^{1}/_{4}$"-20 x $^{5}/_{8}$" bolts and nuts (not included) through each corner of each shelf, and into the small holes of the upright.

12. If more than one unit is to be used in a row, assemble a new unit with $^{1}/_{4}$"-20 x 1" bolts and nuts. The pair of side braces on the first unit becomes a common pair for the two units.

A

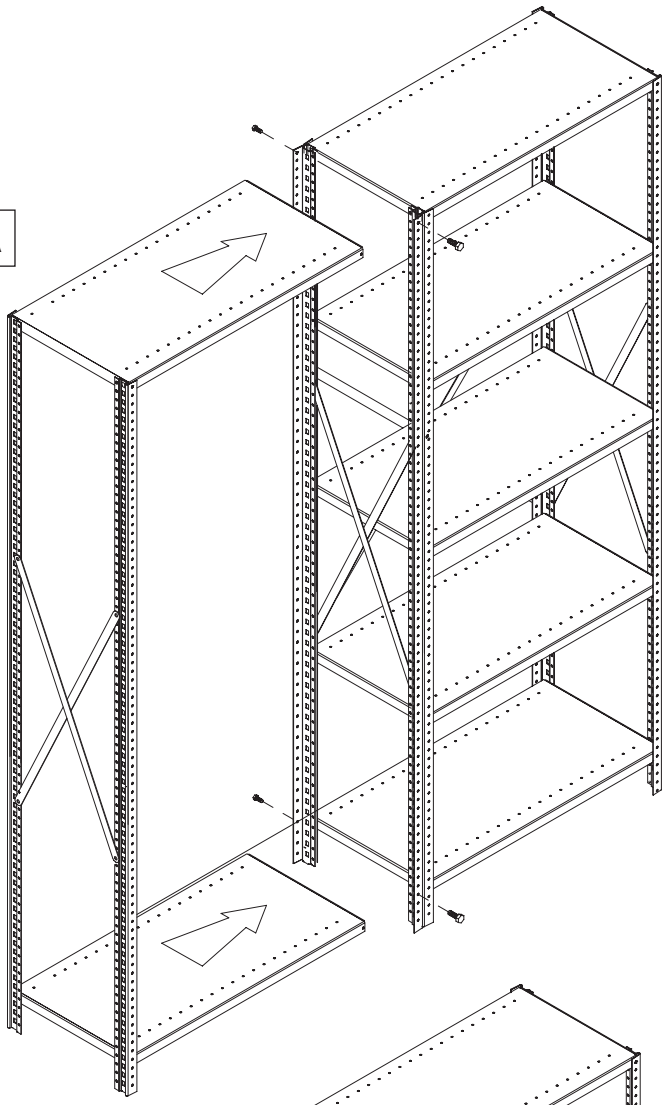

B

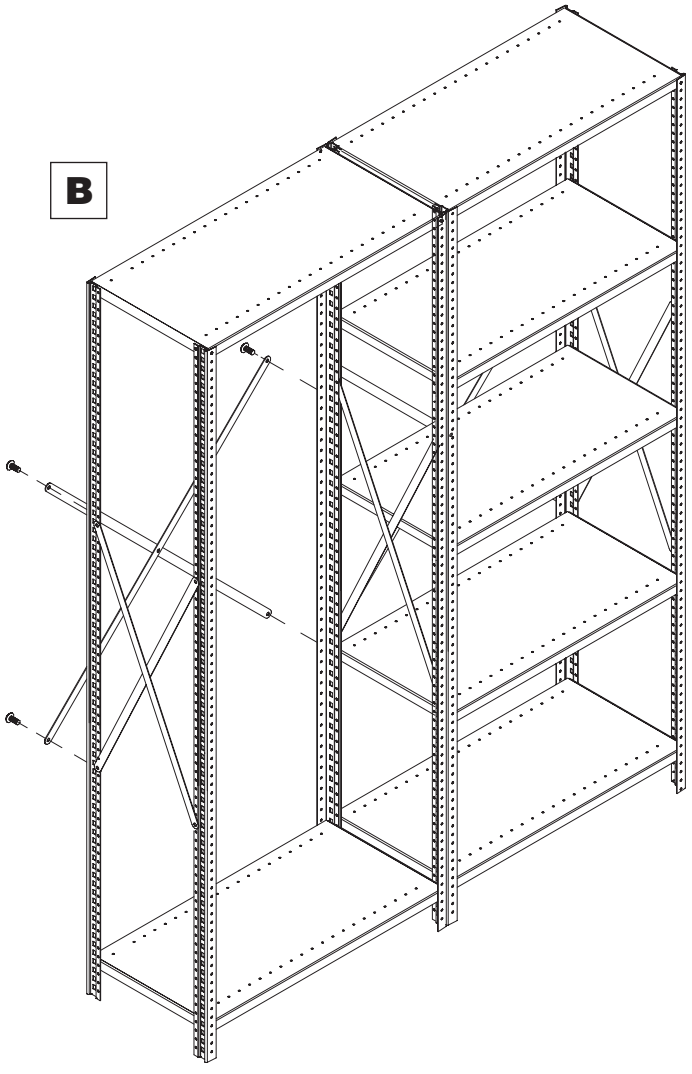

C

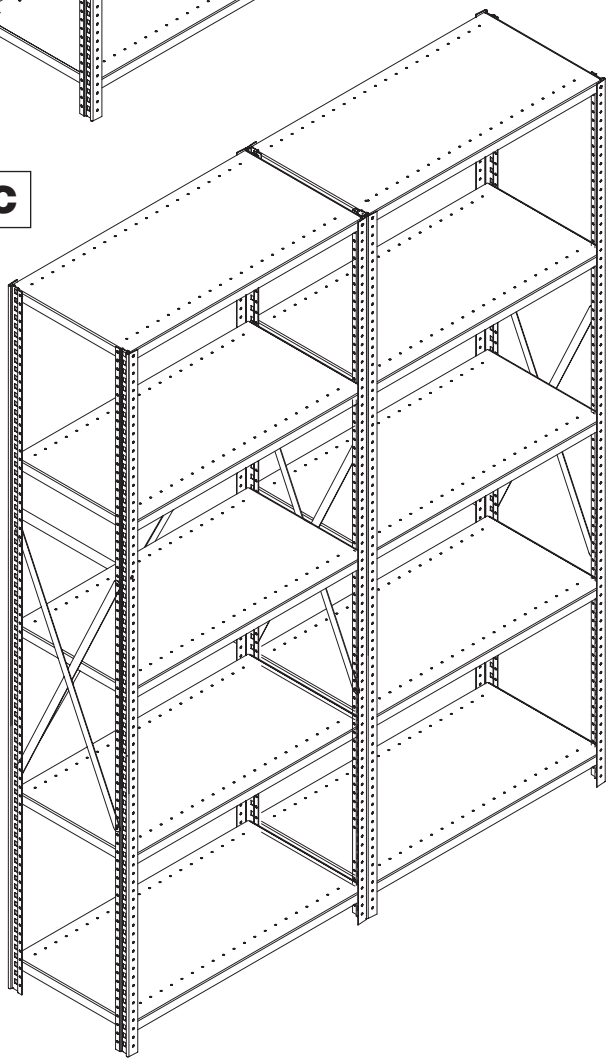

13. If two units are to be placed back-to back, the back braces on the first unit become a common pair for the two units.

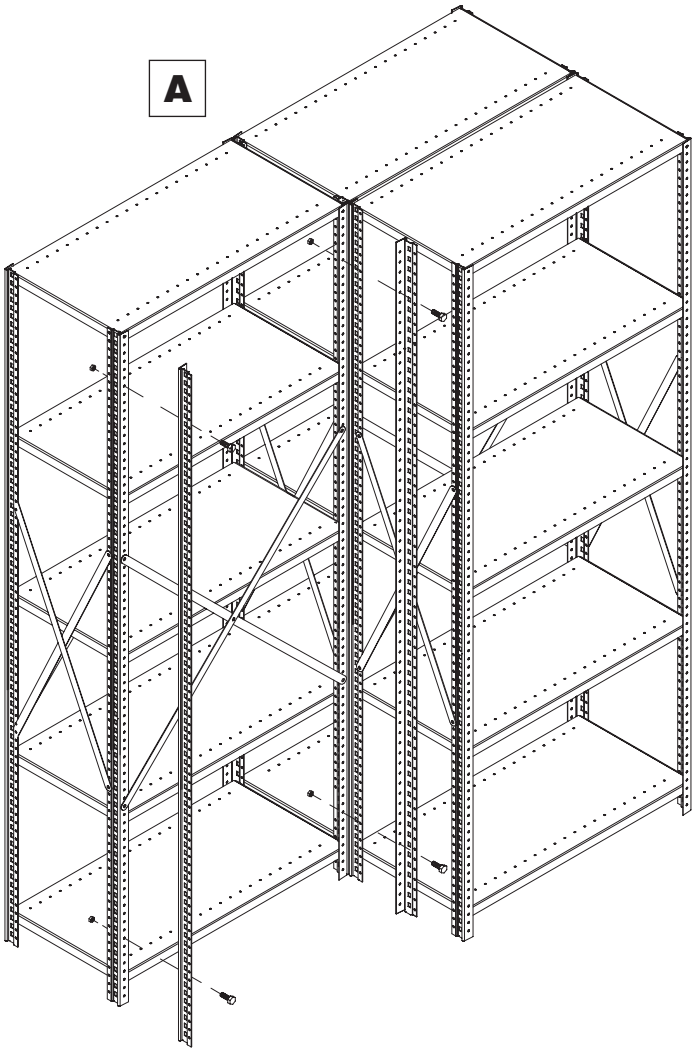

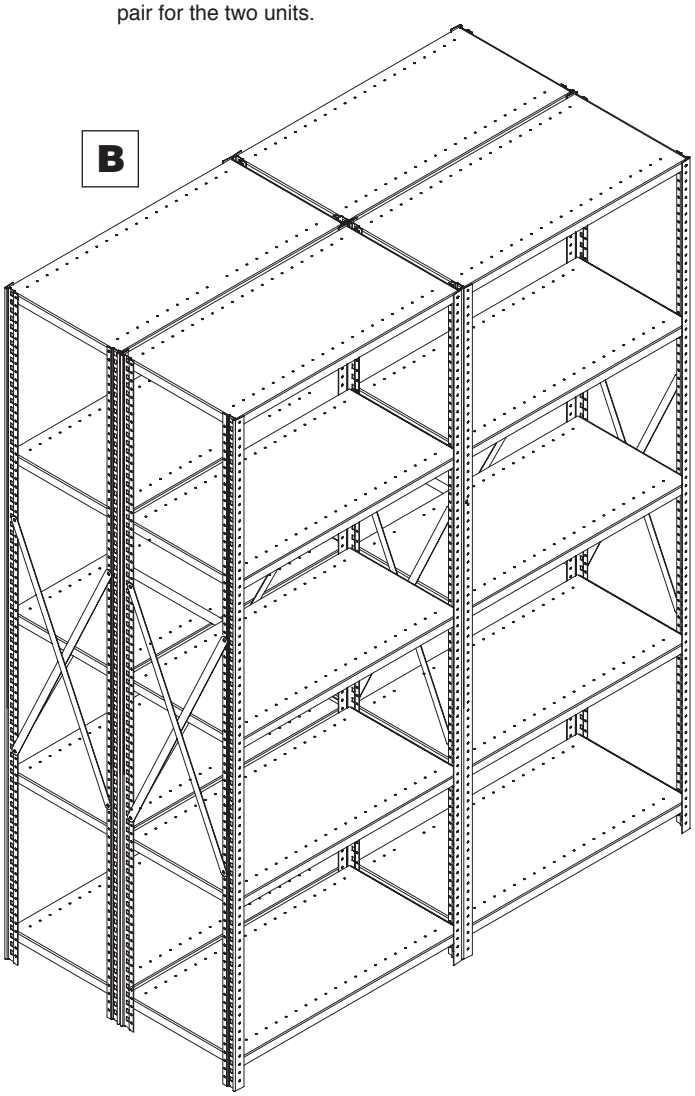

14. For added shelf strength, insert shelf reinforcement channel 1a. (sold separately) into bottom of shelf. Place on an angle and turn into shelf channels as pictured above.

1a.

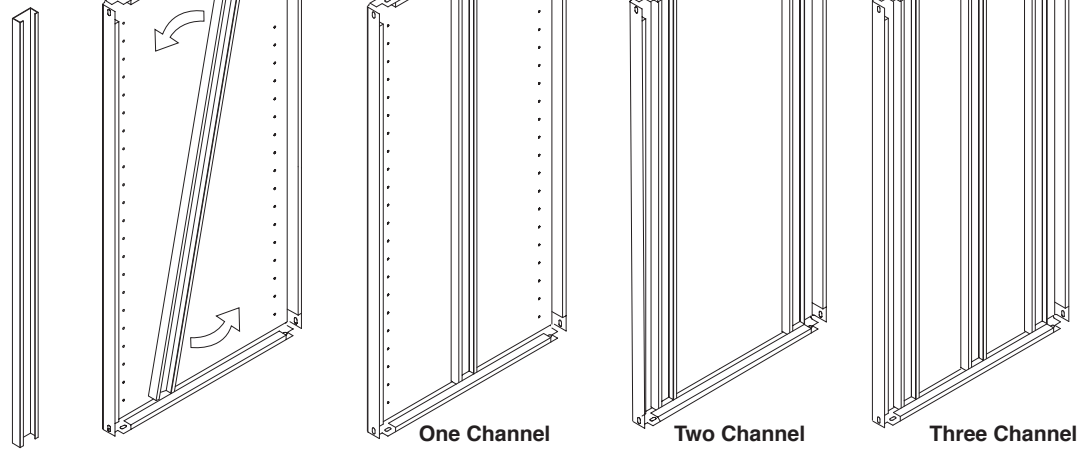

Customer Service
1-800-645-2986

FS Workspace
Business • Education • Facility Supplies
FilingSupplies.com

FilingSupplies.com | 800-810-3453