GLOBAL™ INDUSTRIAL
We can supply that.®

User's manual	Manual del usuario	Manuel de l'utilisateur
Customer Service US: 1-800-645-2986	Servicio de atención al Cliente US: 1-800-645-2986	Service à la clientèle Canada: 888-645-2986

REF.	QTY.	DESCRIPTION
1	1	LEFT SIDE BACK PANEL
2	1	RIGHT SIDE BACK PANEL
3	1	LEFT SIDE PANEL
4	1	RIGHT SIDE PANEL
5	1	BOTTOM FRONT INNER SUPPORT CHANNEL
6	1	BOTTOM FRONT KICK PLATE
7	1	BOTTOM SHELF
8	1	TOP SHELF
9	4	GUSSET REINFORCEMENT PLATE
10	1	LEFT DOOR
11	1	RIGHT DOOR
12	4	SHELF

REF.	QTY.	DESCRIPTION
H1	22	SHEET METAL
H2	4	6.5 PLAIN WASHER
H3	4	5.25 mm SPLIT WASHER
H4	4	M6 x 19 mm ROUND PHILLIP HEAD SCREW
H5	6	HINGE PIN
H6	2	BUMPER
H7	12	PLASTIC HINGE CAP
H8	16	SHELF CLIP
H9	6	PLASTIC INSERT
H10	1	RIGHT HAND DOOR HANDLE
H11	2	BACK PLATE
H12	4	5.5mm SPLIT WASHER
H13	4	M5 x 8mm ROUND PHILLIP HEAD SCREW
H14	1	COTTER PIN
H15	1	LOCK LATCH
H16	2	LOCKING ROD
H17	1	LOCKING BRACKET
H18	1	LEFT HAND DOOR HANDLE
H19	2	ROD GUIDE
	2	KEY

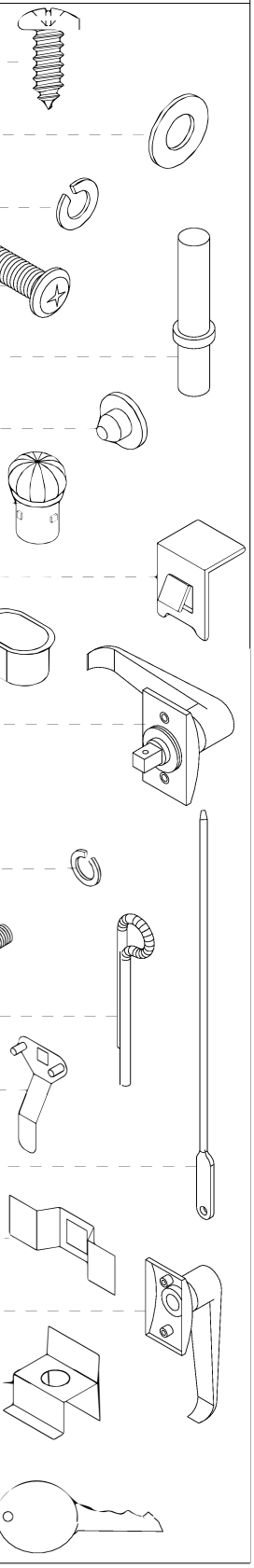

⚠ WARNING.

1. USE 2 PEOPLE TO ASSEMBLE.
2. LAY PARTS ON SOFT SMOOTH NON-SCRATCH SURFACE.
3. DO NOT OVERLOAD SHELVES.
4. LOAD LOWER SHELVES FIRST.
5. DO NOT CLIMB OR STAND ON SHELVES.

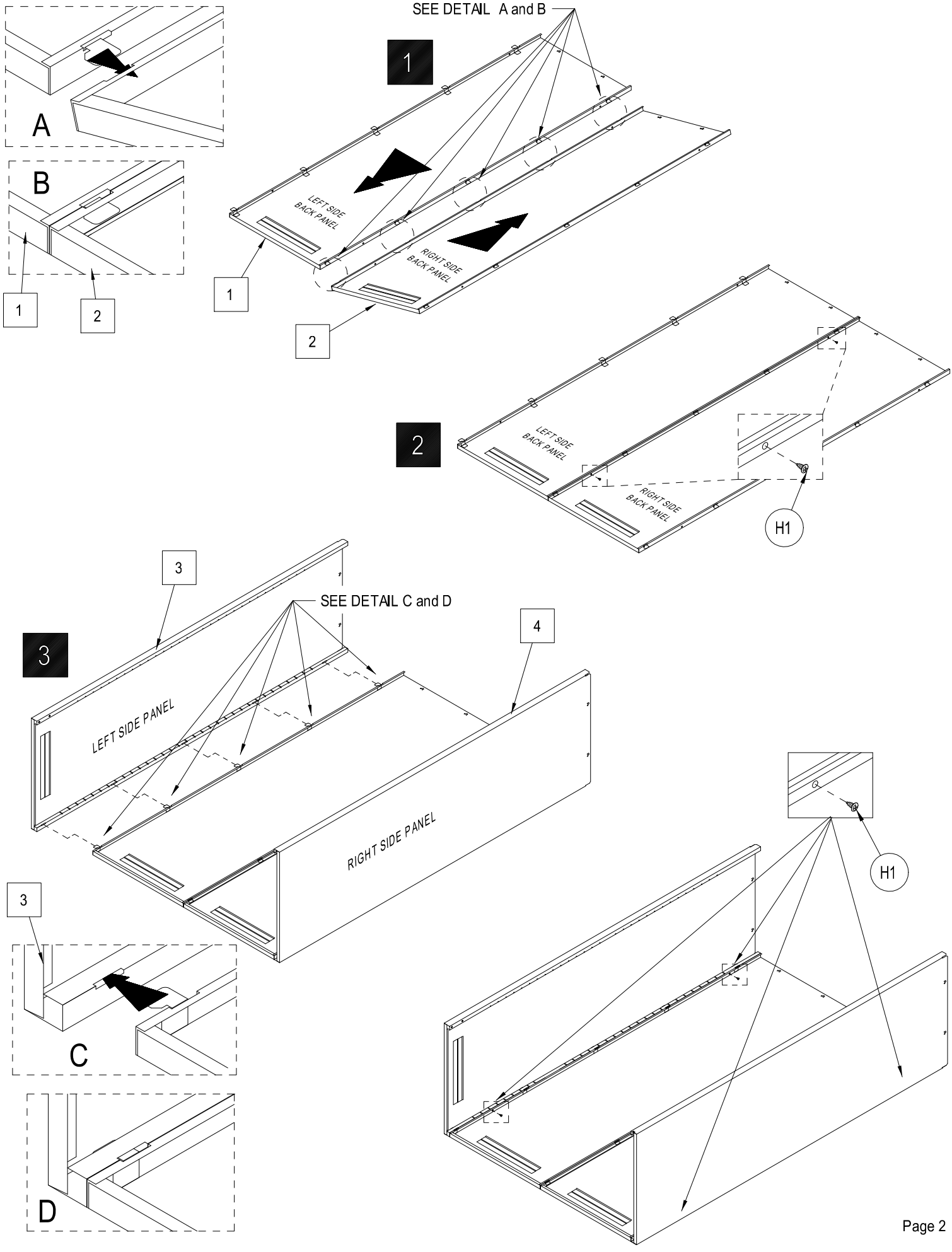
SEE DETAIL A and B
1
LEFT SIDE BACK PANEL
RIGHT SIDE BACK PANEL
A
B
1
2
2
LEFT SIDE BACK PANEL
RIGHT SIDE BACK PANEL
H1
3
SEE DETAIL C and D
4
3
LEFT SIDE PANEL
RIGHT SIDE PANEL
3
C
D
H1

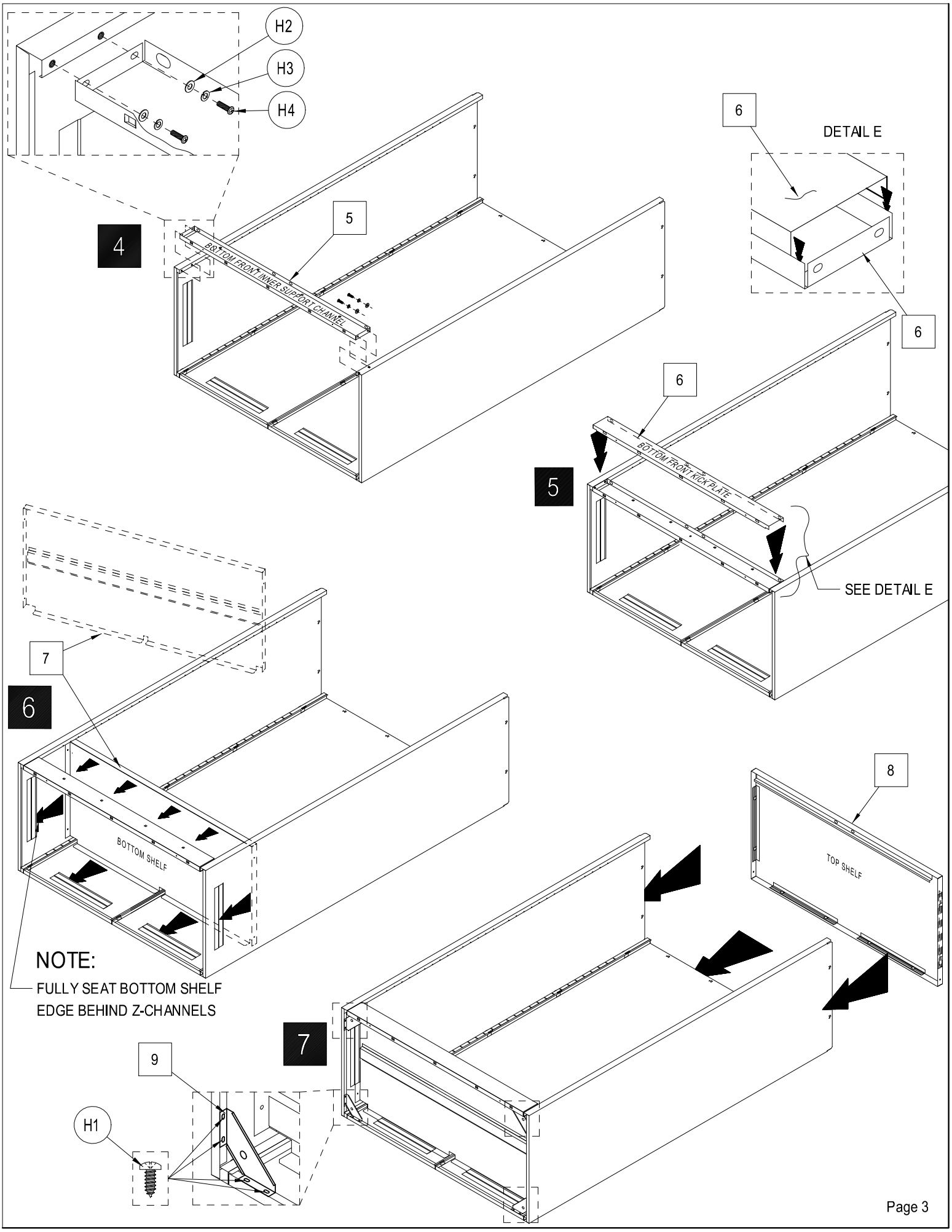
H2
H3
H4
4
5
BOTTOM FRONT INNER SUPPORT CHANNEL
6
DETAIL E
6
6
5
BOTTOM FRONT KICK PLATE
SEE DETAIL E
7
6
BOTTOM SHELF
8
TOP SHELF
NOTE:
FULLY SEAT BOTTOM SHELF
EDGE BEHIND Z-CHANNELS
7
9
H1

8

STAND CABINET UP.
(2 PEOPLE REQUIRED)

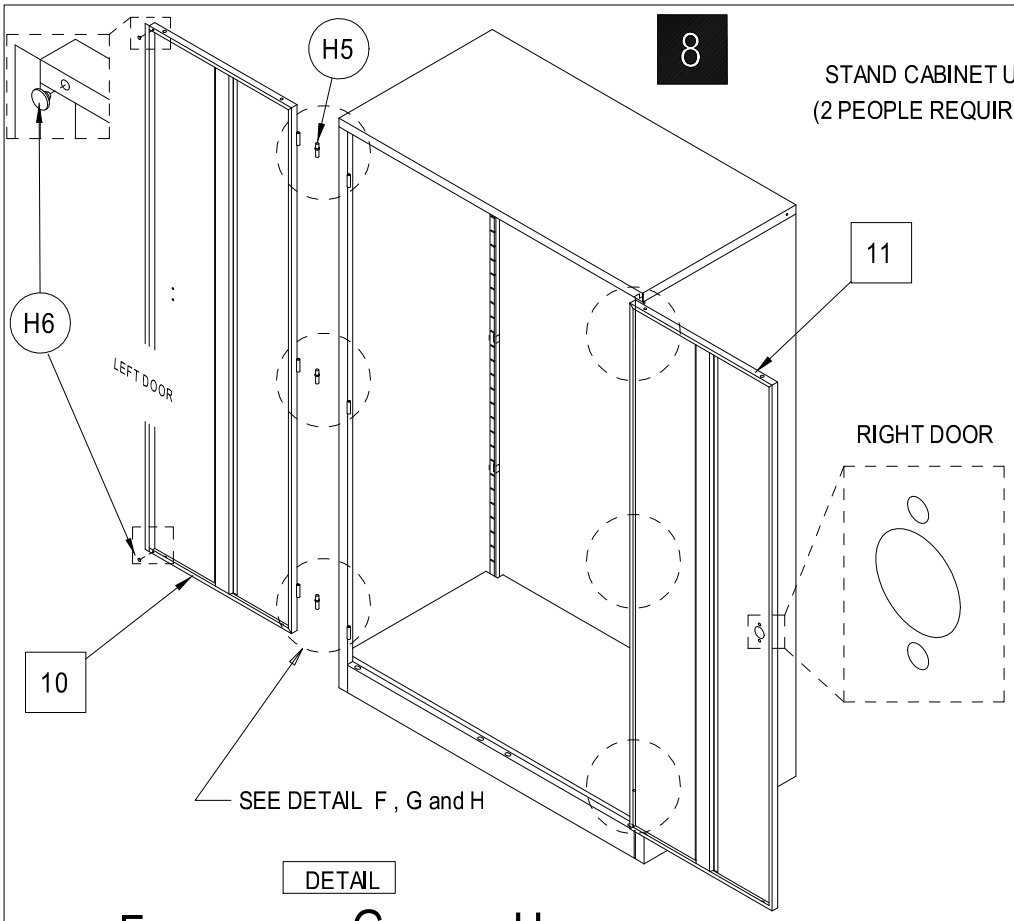

DETAIL

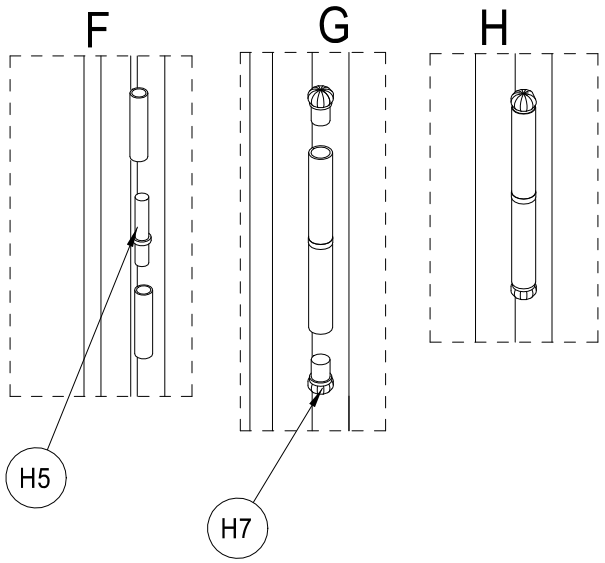

9

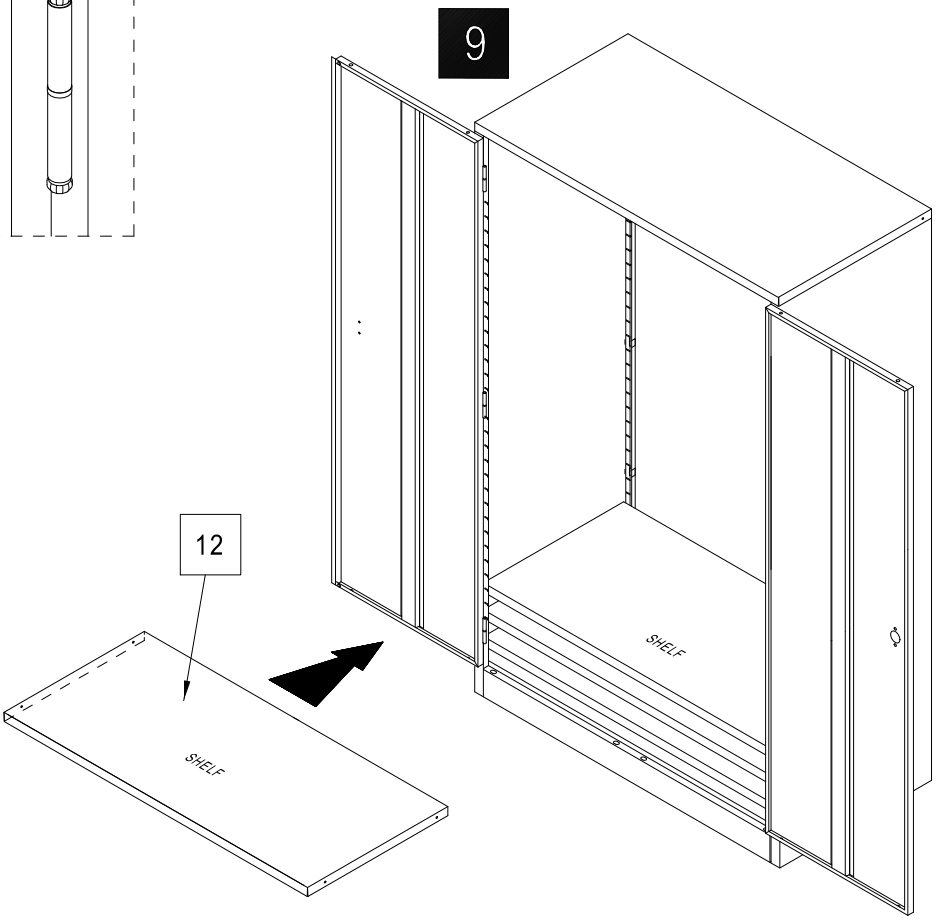

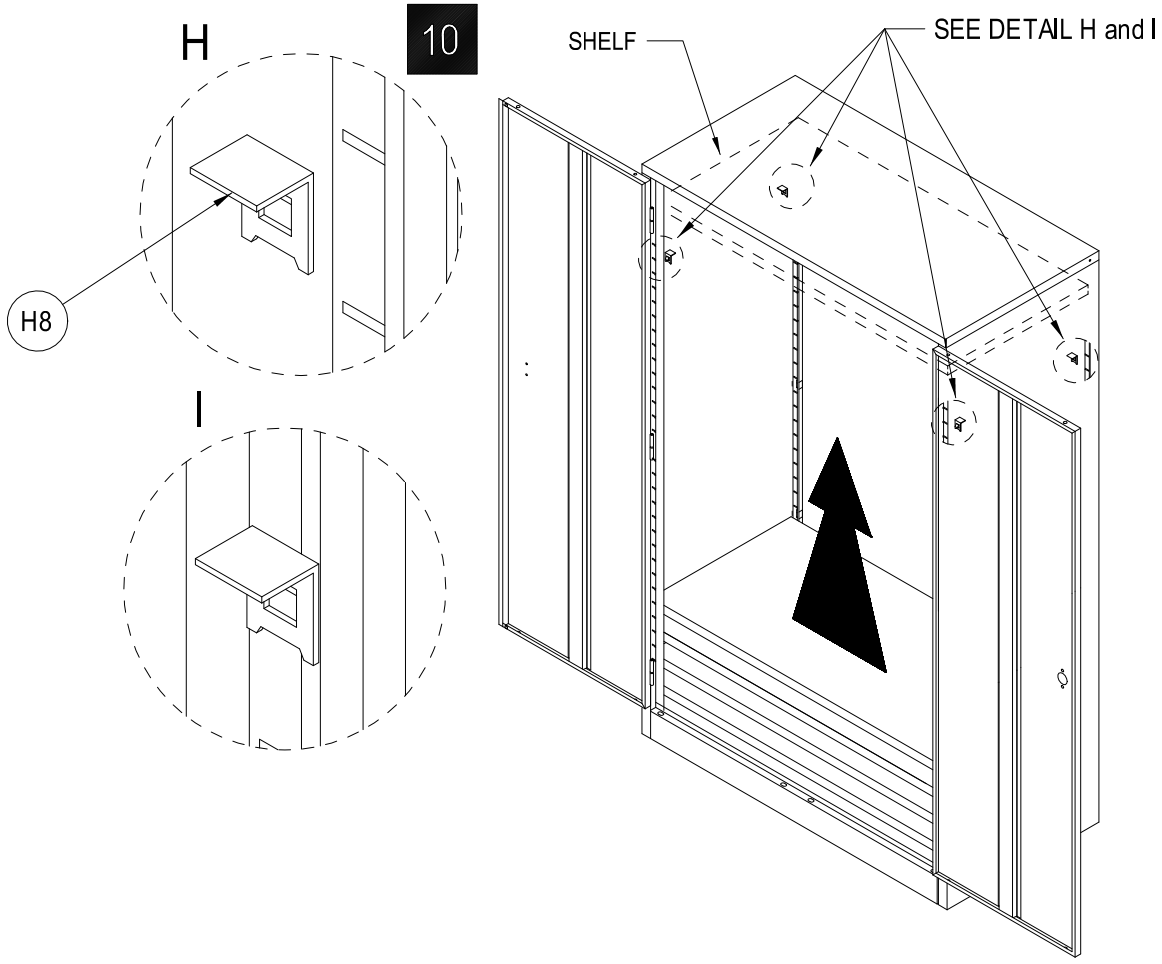
10
H
H8
I
SHELF
SEE DETAIL H and I

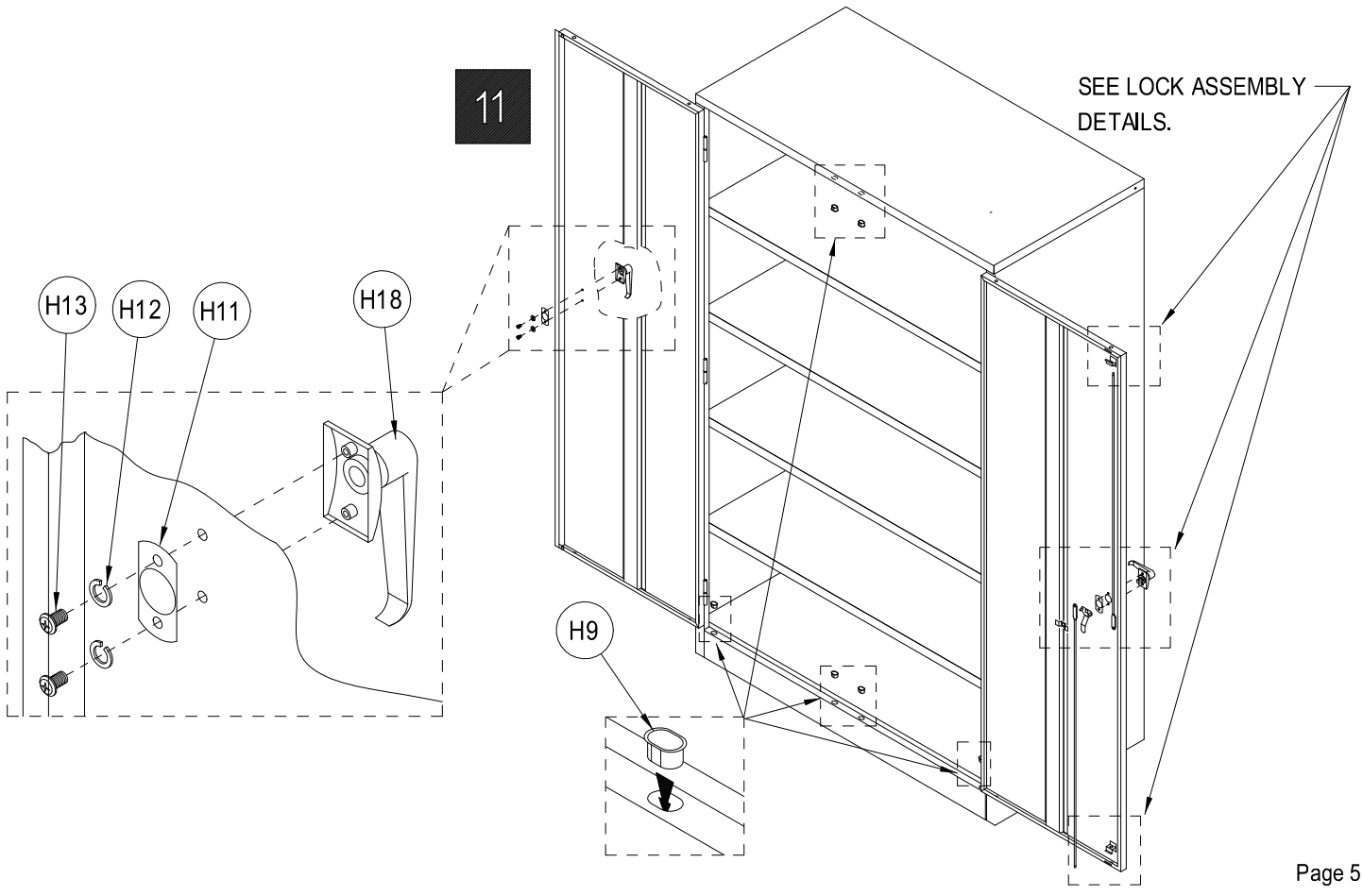
11
H13
H12
H11
H18
H9
SEE LOCK ASSEMBLY
DETAILS.

LOCK ASSEMBLY

1

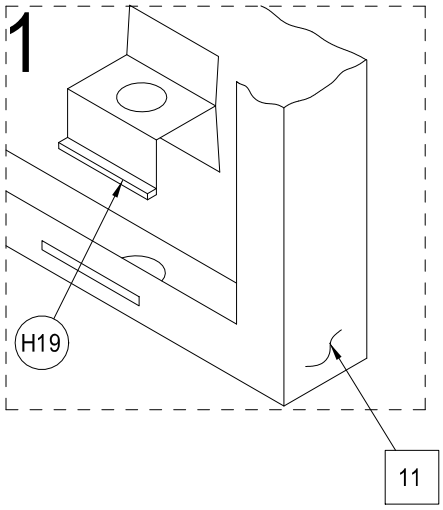

2

NOTE:
PUT HANDLE IN THIS POSITION

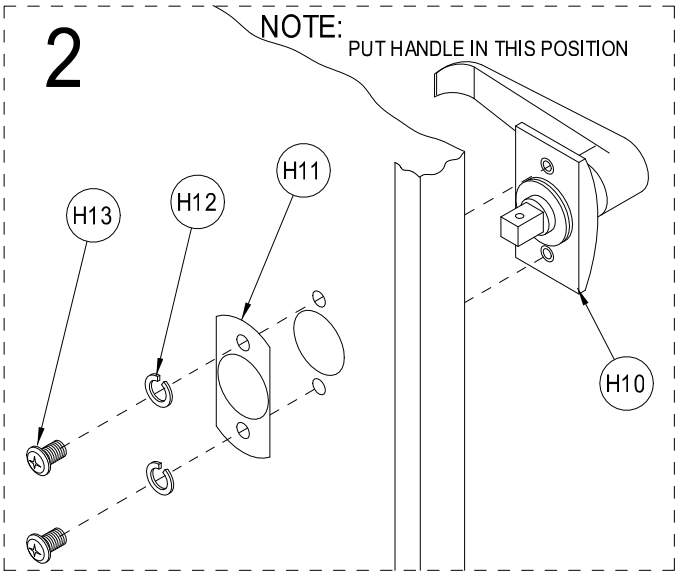

RIGHT DOOR ROD
ASSEMBLY

3

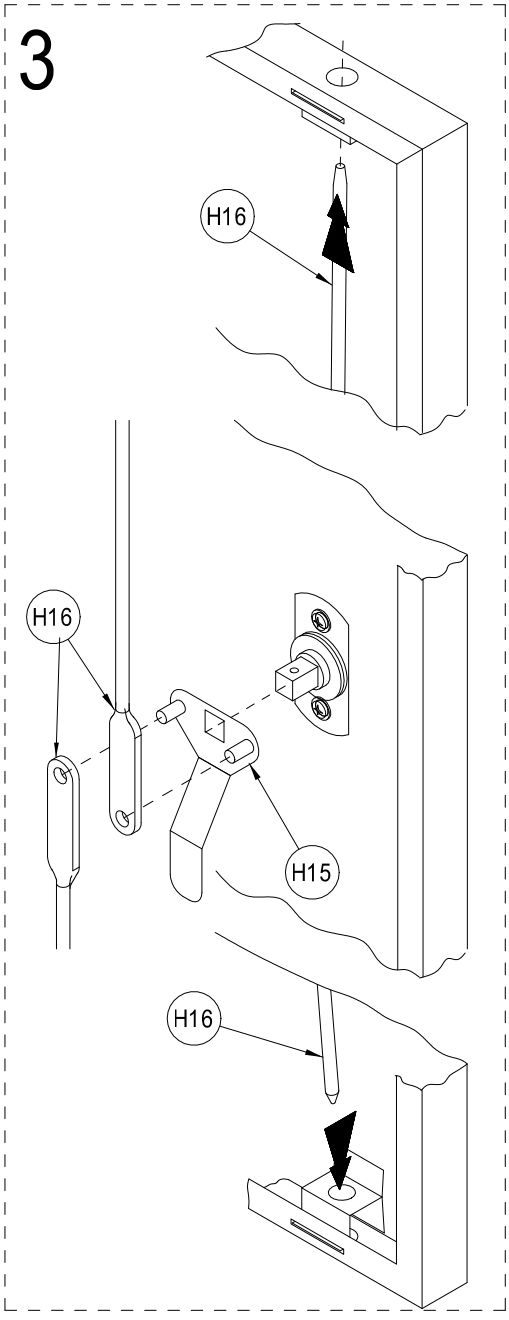

4

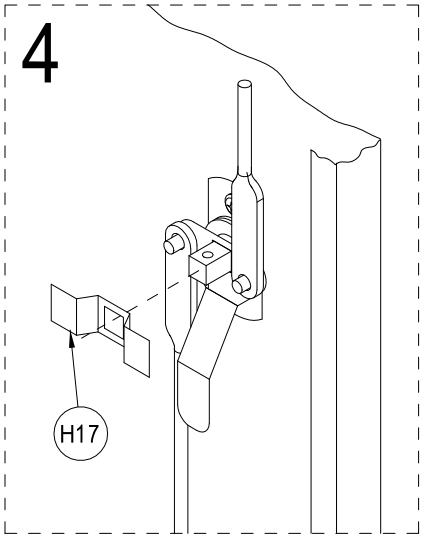

5

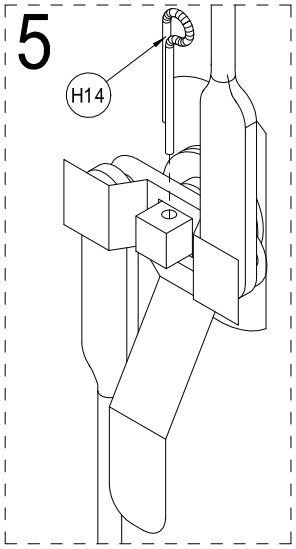

6

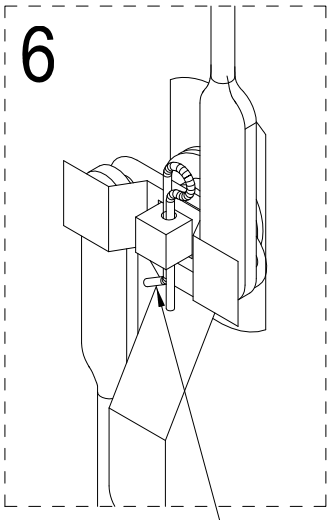

BEND 1 LEG OF
COTTER PIN WITH PLIERS.