Model: WBB329667

BESTSELLER

Power Threading/Receding Threader Model 65R Dies, RIDGID 38100

★★★★★ (1)

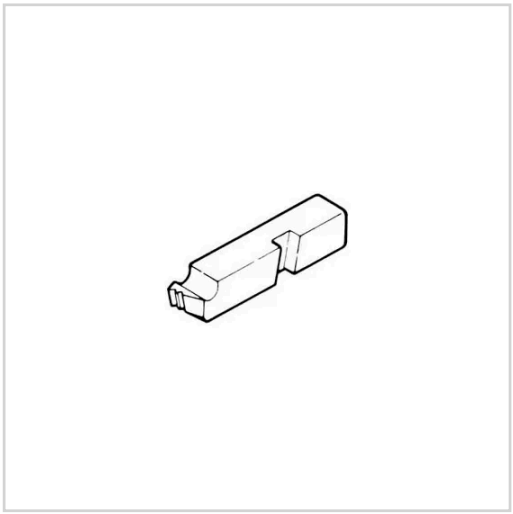

Available on or around 11/25/2026

Product Description

Receding Threaders Pipe Dies for 65R-C & 65R-TC Ratchet Threaders

Specifications

Weights & Dimensions

Weight	0.5 lbs
Pipe/Tube Size	1 in. Thru 2 in. - 11 1/2 NPT

Product Details

Type	Pipe Die
Material	High-Speed
Cutting Direction	Right
Manufacturers Part Number	38100
Brand	RIDGID

Warranty

Warranty	Lifetime