GLOBAL® INDUSTRIAL
We can supply that.®

User's manual	Manual del usuario	Manuel de l'utilisateur
Customer Service US: 1-800-645-2986	Servicio de atención al Cliente US: 1-800-645-2986	Service à la clientèle Canada: 888-645-2986

Pallet Rack Upright Frames, Starter Kits, and Add-ons Assembly Manual



Recommended Tools:

- 2x 9/16” (14 mm) wrenches
- Sharp, cutting tool (box cutter, safety razor, etc)
- PPE (Personal Protective Equipment)
- Torque wrench, air compressor, 9/16” drive impacts or equivalent
- Measuring Tape

QR Code to Video Tutorial:

PRIVACY.FLOWCODE.COM

This product meets ANSI MH16.1 "Design, Testing, And Utilization of Industrial Steel Storage Racks"

WARNING:

- All personnel should read and understand this manual before working with this product.
- Observe and obey all safety regulations when assembling, installing, and using the pallet rack. This includes all generally accepted safety rules, local building codes, and country/state-specific regulations for construction and storage.
- Do not install pallet racks outdoors, as they are designed solely for indoor warehouse usage. Do not store products unprotected in outdoor environments prior to installation. Do not store products in damp or corrosive environments that can damage the surface paint.
- Pallet racks should be assembled by trained or experienced personnel who are familiar with this product. At least two persons are required for the assembly of this product.
- All applicable drawings and instructions in this manual should be followed.
- Use necessary protective equipment such as gloves, safety shoes, hardhats, safety glasses, and anything else needed to prevent injury.
- Improper assembly and unapproved modifications/conversions (including but not limited to welding and cutting) of the pallet rack may cause injury, death, or damage to property and personnel.
- Do not use or replace parts, hardware, or accessories with ones not provided by Global Industrial. Doing so will void the warranty and absolve Global Industrial of any liability.

CAUTION:

- All nut and bolt connections should be tightened to the specified torque requirements. Do not over-tighten bolts!
- Aisle/work area should be kept clean and clear of all materials and debris during installation.
- Check overhead and surrounding clearance prior to raising components or the assembled uprights.
- Do not stand the upright or post until it is being used in a pallet rack assembly and supported by a beam.
- Be mindful of unsecured pivotable braces, which may create a pinch hazard.
- Storage rack should be installed only on an adequate concrete floor. Every column footplate of each pallet rack installation must be properly anchored to the floor. Consult with your professional engineer to ensure secure anchorage.
- Do not expose your storage rack to corrosive or abrasive substances or abnormal dampness.
- Never climb, stand, or step on racks before, during, or after assembly.
- Perform routine checks on pallet rack frames to identify any damages.

DISCLAIMER:

- If seismic conditions apply, verification of capacities must be confirmed with a seismic engineer. Global Industrial is not responsible for engineering, installation and/or application of this material. Global Industrial is not responsible for permits. It is the full responsibility of the customer to check the contents and quantities. The capacity rating (s) provided are for reference only. These ratings apply to static (non- seismic) conditions only.

PATENT PENDING

© 2024 Global Industrial

TABLE OF CONTENTS

WARNING, CAUTION, DISCLAIMER 1
RECOMMENDED TOOLS. 1
PRE-ASSEMBLY PREPARATIONS 3
FLOORING CONSIDERATIONS 3
ADDITIONAL RECOMMENDATIONS 3
PALLET RACK UPRIGHT ASSEMBLY 4
MAINTENANCE 6
REPLACING BRACES 7
REPLACEMENT PARTS. 7
PALLET RACK START KIT ASSEMBLY 8
PALLET RACK ADD-ON ASSEMBLY 9
FRAME CAPACITY CHART 10
PALLET BEAM UPRIGHTS, BEAMS, AND ACCESSORIES GUIDE 11
ASSEMBLY DIAGRAM. 12
WARRANTY INFORMATION 34
WARNING LABEL PRINT-OUT 35

PRE-ASSEMBLY PREPARATIONS

Before assembling the pallet racks:

- Measure out the area where the pallet racks will be installed. Ensure adequate floor space and sufficient ceiling height prior to installation.
- Allow sufficient aisle spacing. Please keep in mind that the space between pallet racking should be greater than the intended work aisle spacing as items stored on the shelves may protrude into the aisle. It is generally recommended to have a safety distance of 18" on both sides of traffic routes, but this distance may vary depending on the size of the vehicles operated in the facility.
- When planning out the racking layout, the necessary safety distance between the racks and building components (such as columns and walls) must be observed.
- When planning out the racking layout, ensure adequate longitudinal flue space between rows as required by NFPA 13 and/or other local fire safety regulations. 6" spacing is recommended; however, please confirm with a professional engineer.

FLOORING CONSIDERATIONS

Before installing the pallet rack system, make sure that:

- The floor has an adequate load bearing capacity that can withstand the intended loads. Consult a specialist or professional if unsure. The customer is responsible for ensuring that this information is correct.
- The floor must be a reinforced concrete slab with a minimum thickness of 6". If magnesite screed is present on the surface, insulating plates and special ground anchors are required to prevent corrosion.
- Pallet racks should be installed square and plumb on the floor. Shimming may be necessary if floors are not level. Maximum allowed out-of-plumbness is ½” per every 10 feet of height.

NOTE: All values mentioned below are general recommendations in the warehouse industry. It is the customer's responsibility to consult with a qualified professional and determine the anchoring requirements.

ADDITIONAL RECOMMENDATIONS

- Install adequate lighting in every aisle. Better visibility will reduce the chances of workers bumping into pallet racks and damaging them.
- Install column/post protection devices. These accessories are sold separately and protect the pallet rack upright from damage caused by impact from forklifts. It is recommended to install these in high traffic areas.
- Install capacity signs to each pallet rack that states relevant information such as: maximum pallet load, average pallet weight, and maximum load per bay.

PALLET RACK UPRIGHT ASSEMBLY

For models: 298678, 298689, 298690, 298691, 298692, 298693, 298694

1 Disassemble the Package

Disassemble the pallet upright package. Using a box cutter or similar sharp utensil, gently cut off the straps holding the upright kit together.

Avoid scratching the protective paint on the components.

Loosen the bolts on the footplates to separate the two posts.

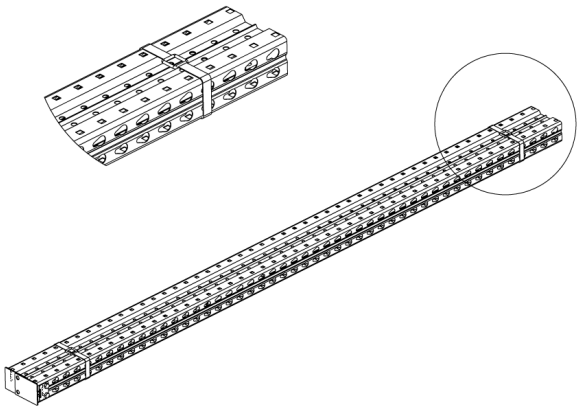

2 Lay Out and Check All Parts

Lay out all the components on the ground and identify them according to the parts list.
(Drawings of all upright models can be found on pages 12-25 of this manual. Refer to the corresponding model.)

Align the bottom footplates of the posts according to the diagram and spread the attached braces.

Confirm that all the parts are present and if any are missing or damaged, contact Global Industrial to request replacements.

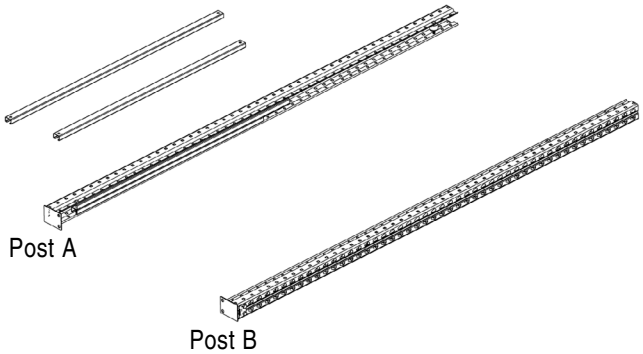

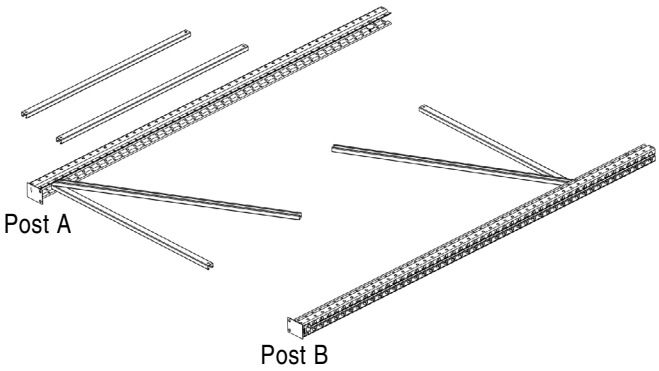

NOTE: Graphics are for illustration purposes only and may not accurately reflect the loose components in your purchased item.

3 Adjust Footplates

Confirm that the footplate is flush with the bottom of the post. If it is not, loosen the bolts and push the footplate in until it is flush with the bottom of the post. Retighten the bolts afterwards.

Bolts should be tightened following the below requirements:

Torque range: 33-43 ft. lbs. (45NM-59NM)
Max. torque: 43 ft. lbs (59NM)

NOTE: Visit the Global Industrial website to view our selection of optional footplate accessories. Be sure to consult with a professional engineer first to determine if they are suitable for your seismic conditions.

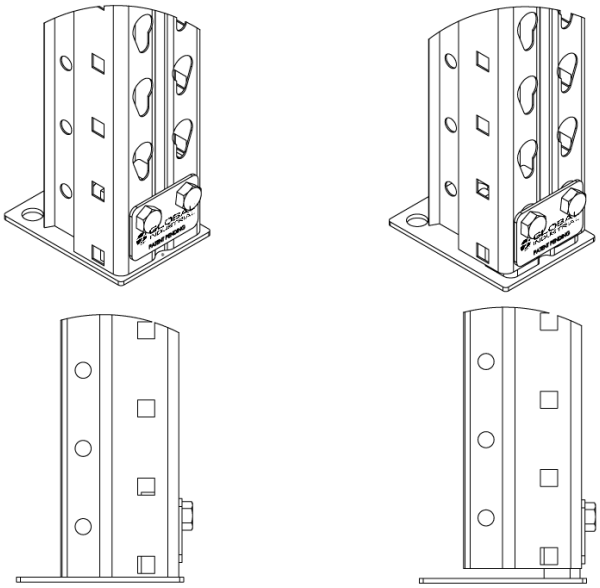

Flush | Not Flush

4 Connect the braces to the posts

Follow the assembly graphics to connect the two posts together using the braces and hardware. The bolt should go through the post and brace(s)/spacer and is secured with the nut. The holes on the posts are marked to indicate where the bolts are inserted.

The shorter side of the shoulder bolt head should be touching the lip of the open end of the post.

NOTE: Some pre-inserted bolts may need to be removed to attach an additional brace into the correct position.

NOTE: The open "C" side of the brace should always face outwards, with the back of the brace touching either the back of another brace or a rubber bushing.

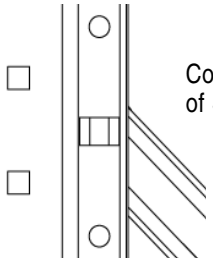

Correct Orientation of Shoulder T Bolt

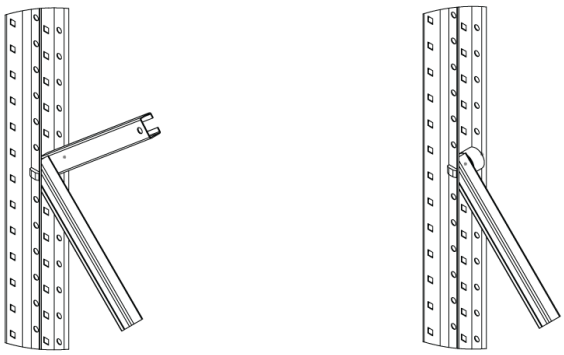

2x Brace Configuration | 1 Brace + Rubber Bushing Configuration

5 Tighten all bolts

Confirm that the upright assembly matches the diagram shown in the graphics. Ensure all bolts are sufficiently tightened before using the upright panel in a pallet rack assembly.

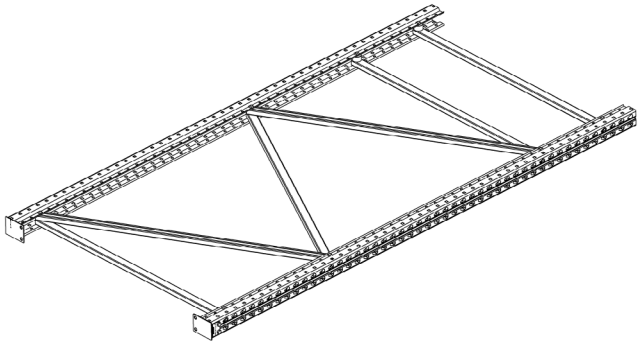

Bolts should be tightened following the below requirements:

Torque range: 33-43 ft. lbs. (45NM-59NM)
Max. torque: 43 ft. lbs (59NM)

Do not over-tighten bolts!

6 Apply Warning Label to Upright

Warning label not provided!
Print/copy the warning label from last page of this manual.

Apply warning label to the face of the upright post. It is strongly advised to have the warning label on the face of each upright post at the end of the aisles.

Recommended height from the base of the footplate: 5ft to 6ft. Beam should not cover warning label when assembling pallet rack.

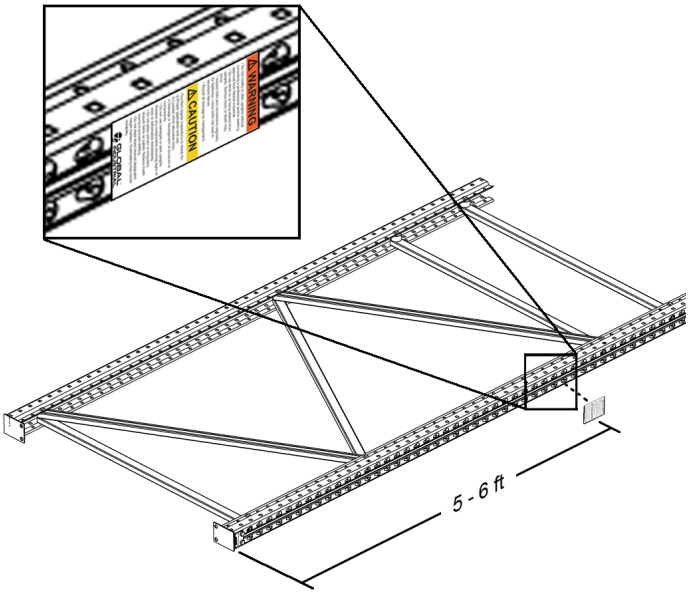

MAINTENANCE

Perform a regularly scheduled maintenance program. At a minimum this program should include the following:

- Check for missing or damaged hardware including bolts, nuts, and beam locking devices. Replace any missing or damaged items with Global Industrial supplied/ approved hardware. Check that all bolts and fasteners are snug and tight.
- Check for damage to any components, including beams and columns. Damaged items should be repaired or replaced.
- Check to ensure that all racks are plumb, level, and square.
- Check to make sure that the rack is being used for its intended purpose. Maintain a set of installation drawings on site for review. Check the weight of the product being stored to ensure that it does not exceed original design weights.
- Be on the lookout for areas that have excessive damage or repeated damage and take corrective action. For instance, ends of rack rows often experience damage from fork trucks entering the aisle and cutting the corner too quickly. This problem can be addressed through the use of guard rails or other column protective devices.
- Maintain good housekeeping. Clear, clean aisles are essential to the safety of your facility.

REPLACING BRACES

If there is any visible bending or damage to any of the braces, particularly at the first-beam level, they should be replaced as soon as possible. Damaged braces will impact the structural integrity of the pallet rack and alter the static load capacity.

To replace the brace:

- Remove all weight on the pallet rack around the affected pallet upright. All racking must be unloaded on all vertical bays on both sides of the upright.
- Unscrew the nuts and remove the shoulder bolts that are connecting the brace to the pallet upright.
- Replace the damaged brace with one provided by Global Industrial.
- Reattach the shoulder bolts and nuts and tighten them to the recommended torque range.

Torque range: 33-43 ft. lbs. (45NM-59NM)
Max. torque: 43 ft. lbs (59NM)

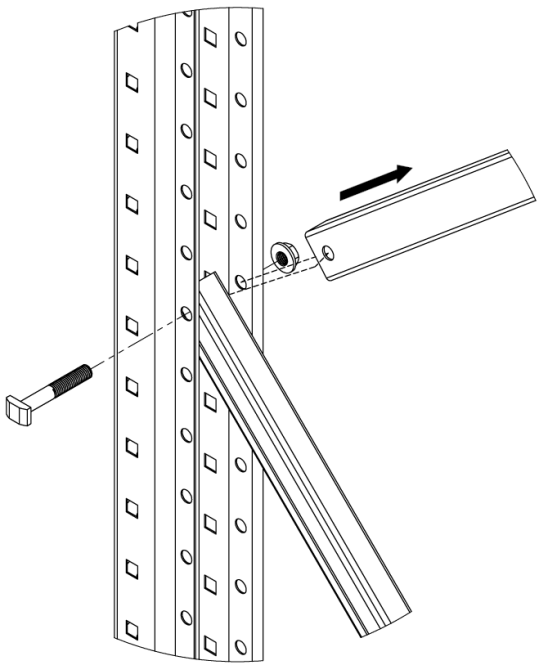

REPLACEMENT PARTS

Model Number	Description
413299	Diagonal Bracing for 42" D Bolted Upright Frame, 2 Braces & Hardware
413300	Horizonal Bracing for 42" D Bolted Upright Frame, 2 Braces & Hardware
413301	Diagonal Bracing for 48" D Bolted Upright Frame, 2 Braces & Hardware
413302	Horizonal Bracing for 48" D Bolted Upright Frame, 2 Braces & Hardware
298816	Footplate (includes a pair of bolts)
298817	Hardware kit for replacing brace(s): 10 nuts, 10 bolts, 4 bushings

WARNING: Do not use or replace parts, hardware, or accessories with ones not specified in this manual. Using unapproved parts will void the warranty and absolve Global Industrial of any liability.

PALLET RACK START KIT ASSEMBLY

1 Connecting the Uprights

Stand two upright assemblies up and space them apart so that the distance between them is approximately the same as the length of the beams being installed.

Position the beam so that it is at the desired height.

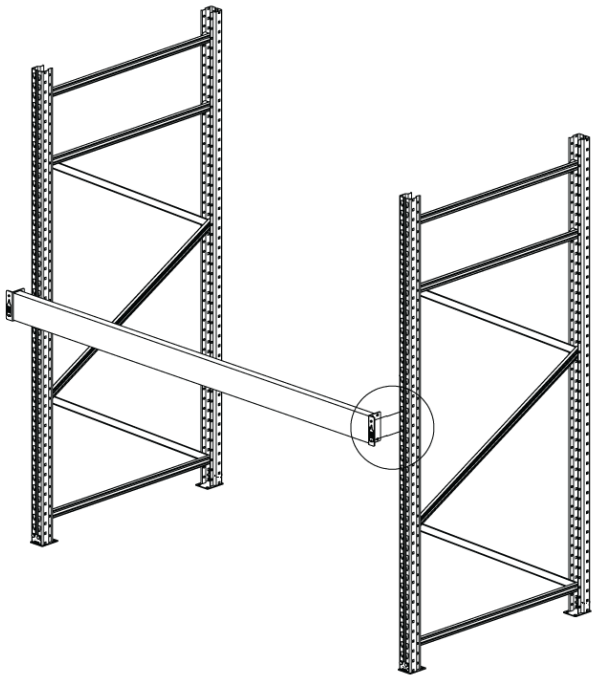

WARNING: Do not leave any of the uprights standing up without any support. A person should be holding onto it until it is secured to a beam.

2 Attaching the Beam

Position the two rivets on each side of the beam on the desired upright post height.

Push the rivets downwards to securely seat them in the upright holes.

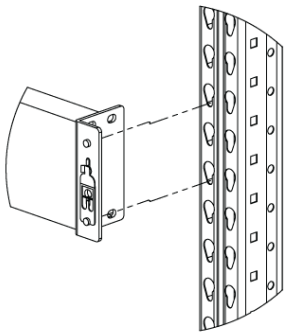

NOTE: To remove a beam, pull back the tab on the beam clip before pushing upwards to un-hook the rivets from the upright post.

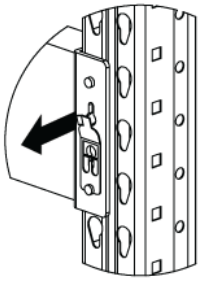

3 Attaching the Other Beams

Attach the remaining beams to the upright assemblies using the same procedure as the previous step.

A minimum of four beams is required between every two pallet uprights for a structurally stable pallet rack.

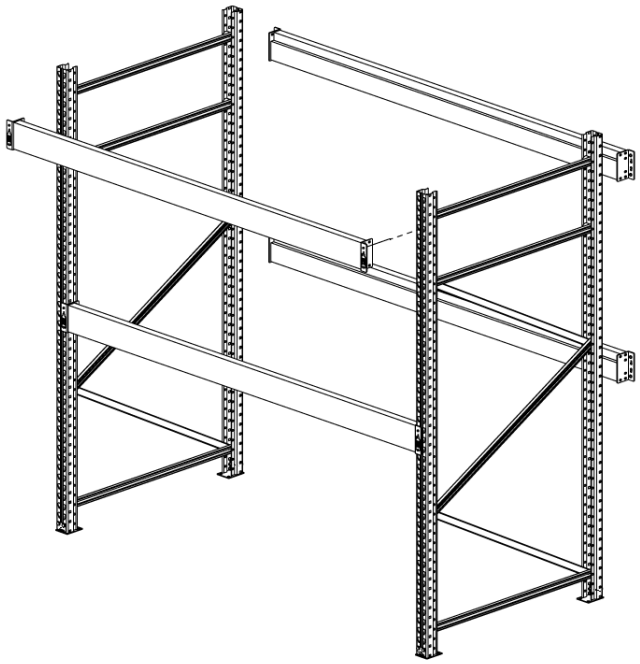

DISCLAIMER: It is necessary to secure the footplates of the pallet rack with suitable floor anchors (not included) before using the pallet rack. Consult with a professional engineer to determine which floor anchors are required for the floor of the warehouse where the pallet rack is to be installed in.

4 Add-ons: Pallet Rack Expansion

To expand the pallet rack, attach another upright assembly with a minimum of four beams to the end of the existing assembly.

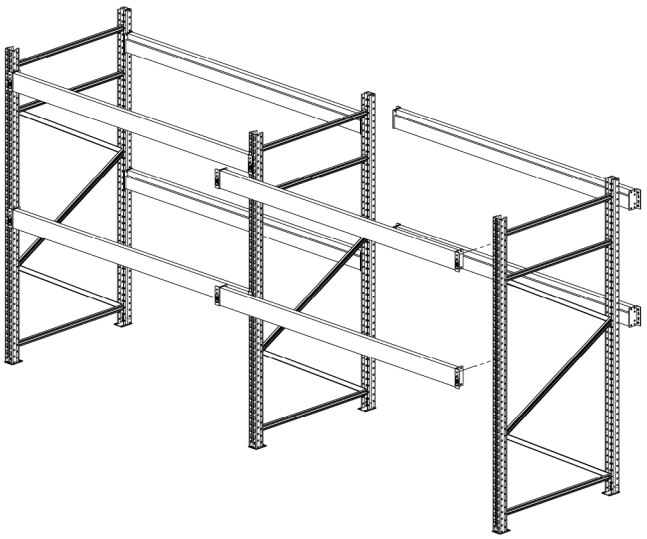

FRAME CAPACITY CHART

The pallet rack upright frame weight capacity is determined by the height between levels. The higher the height between levels, the less the pallet rack upright capacity will be.

To determine the height between levels, measure the distance between the storage levels. Maximum unsupported length is the maximum beam spacing or the distance between the floor and the top of the first beam (whichever is greater).

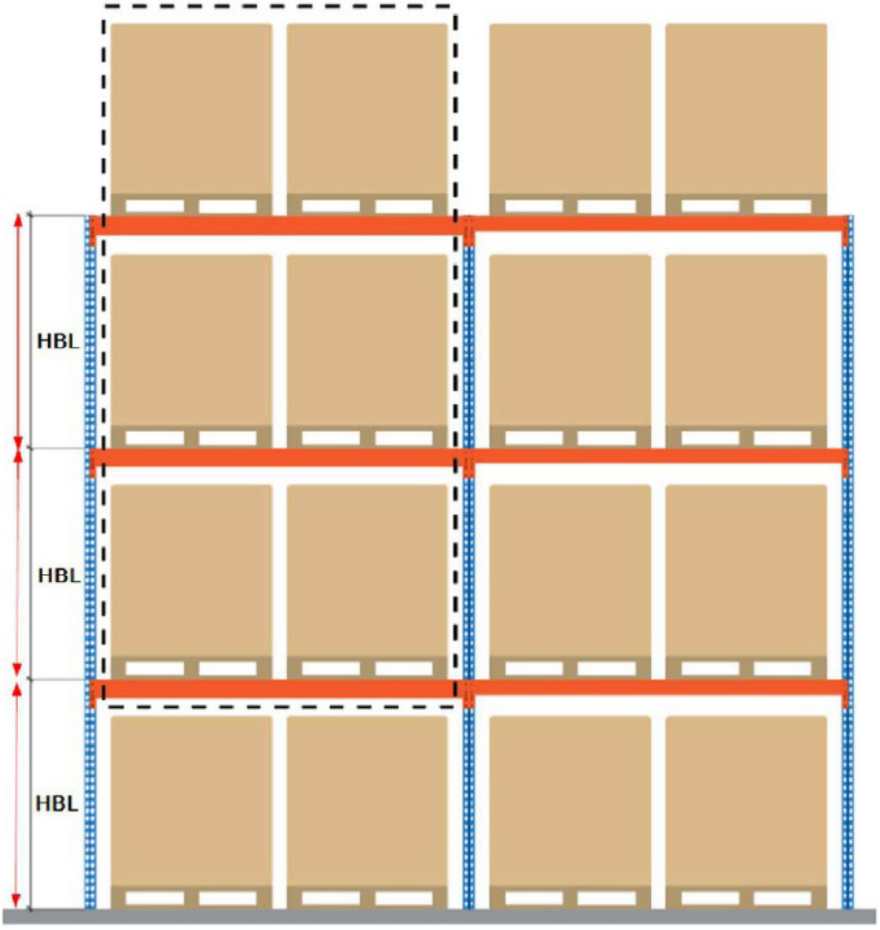

Please view the upright frame capacity chart below to determine if your application preferences meet the requirements for this upright frame model:

Height Between Levels (HBL)	Capacity (lbs)
36"	33,000
42"	32,500
48"	31,800
54"	31,100
60"	30,600
66"	29,800
72"	28,900
78"	28,200

PALLET BEAM UPRIGHTS, BEAMS, AND ACCESSORIES GUIDE

Pallet Rack Uprights

Model Number	Dimensions D x H	Post Dimensions W x D	Weight (lbs)	Assembly Diagram
298678	42"D x 96"H	3 x 3"	62	pg. 12
298689	48"D x 96"H	3 x 3"	64	pg. 14
298690	42"D x 120"H	3 x 3"	77	pg. 16
298691	48"D x 120"H	3 x 3"	79	pg. 18
298692	42"D x 144"H	3 x 3"	92	pg. 20
298693	48"D x 144"H	3 x 3"	94	pg. 22
298694	42"D x 192"H	3 x 3"	121	pg. 24
413358	48"D x 192"H	3 x 3"	123	pg. 26
B3192466	24"D x 96"H	3 x 3"	26	pg. 28
B3192467	24"D x 120"H	3 x 3"	32	pg. 30
B3192468	24"D x 144"H	3 x 3"	38	pg. 32

Unslotted Steel Pallet Rack Beam

Model Number	Width (in)	Beam Height (in)	Shelf Capacity (lb)	Gauge
413311	48	3-5/16	6590	16
413314	96	3-5/16	3230	16
413312	96	4-1/32	5030	16
413313	96	5-1/8	7160	16
413315	108	5-1/8	6420	16
413316	120	5-1/8	5630	16
597007	144	6	5702	15

Pallet Rack Accessories

Accessories	Model Number	Description
Wall Spacer	413101	6" wall spacer w/ hardware; 4 pcs/ctn
	413102	12" wall spacer w/ hardware; 4 pcs/ctn
Row Spacer	413103	6" row spacer w/ hardware; 4 pcs/ctn
	413104	12" row spacer w/ hardware; 4 pcs/ctn
Fork Clearance Bar	413105	Pallet Rack Fork Clearance Bar, 42" D
	413106	Pallet Rack Fork Clearance Bar, 48" D
Pallet Support Crossbar	413107	Pallet Support Crossbar, 42" D; 4 pcs/ctn
	413108	Pallet Support Crossbar, 48" D; 4 pcs/ctn
Backstop	413109	Teardrop Pallet Rack Backstop, 48" L, 6" Offset
	413110	Teardrop Pallet Rack Backstop, 96" L, 6" Offset
	413111	Teardrop Pallet Rack Backstop, 108" L, 6" Offset
	413112	Teardrop Pallet Rack Backstop, 120" L, 6" Offset
	413113	Teardrop Pallet Rack Backstop, 144" L, 6" Offset
Pallet Stopper	413114	Pallet Stopper for 12" Row Spacer, 4 screws
	413115	Pallet Stopper for 18" Row Spacer, 4 screws
	413116	Pallet Stopper for 24" Row Spacer, 4 screws
Footplate	413117	2 pcs Pallet Rack Footplate, 5" x 8" x 2-9/36", 3/8" Thick, 4 sets Nuts & Bolts
	413118	2 pcs Pallet Rack Footplate, 5" x 8" x 11-4/5", 3/8" Thick, 12 sets Nuts & Bolts
	413119	2 pcs Pallet Rack Footplate, 8" x 8" x 11-4/5", 3/8" Thick, 12 sets Nuts & Bolts
End of Rack Protector	670859	End of Rack Protector, Right Side, 3/8''Thick, 42"L, Yellow
	670861	End of Rack Protector, Right Side, 3/8''Thick, 48"L, Yellow
	670854	End of Rack Protector, Double End,3/8'' Thick, 42''L, Yellow
	670855	End of Rack Protector, Double End,3/8'' Thick, 48''L, Yellow
Pallet Racking Guard	337323R	Pallet Racking Guard, 48" W x 24" H
Wire Decking	798654	Pallet Rack Wire Decking, 46"W x 42"D(2500 lbs cap)
	798657	Pallet Rack Wire Decking, 46"W x 48"D (2500 lbs cap)
Anchor Bolt	796365	Anchor Bolt 1/2-13 x 3-3/4"; 50 pcs/package
Shim	796364	Pallet Rack Shim 3" x 4-1/2", 11 Ga. Steel
	413359	Pallet Rack Shim 4-1/4" x 3-1/3", 11Ga. Steel, 10 pcs/package
	413360	Pallet Rack Shim 5" x 8", 11Ga. Steel, 10 pcs/package
	413361	Pallet Rack Shim 8" x 8", 11Ga. Steel, 10 pcs/package

Assembly Diagram

Model No. 298678
Pallet Rack Upright Frame 42"D x 96"H

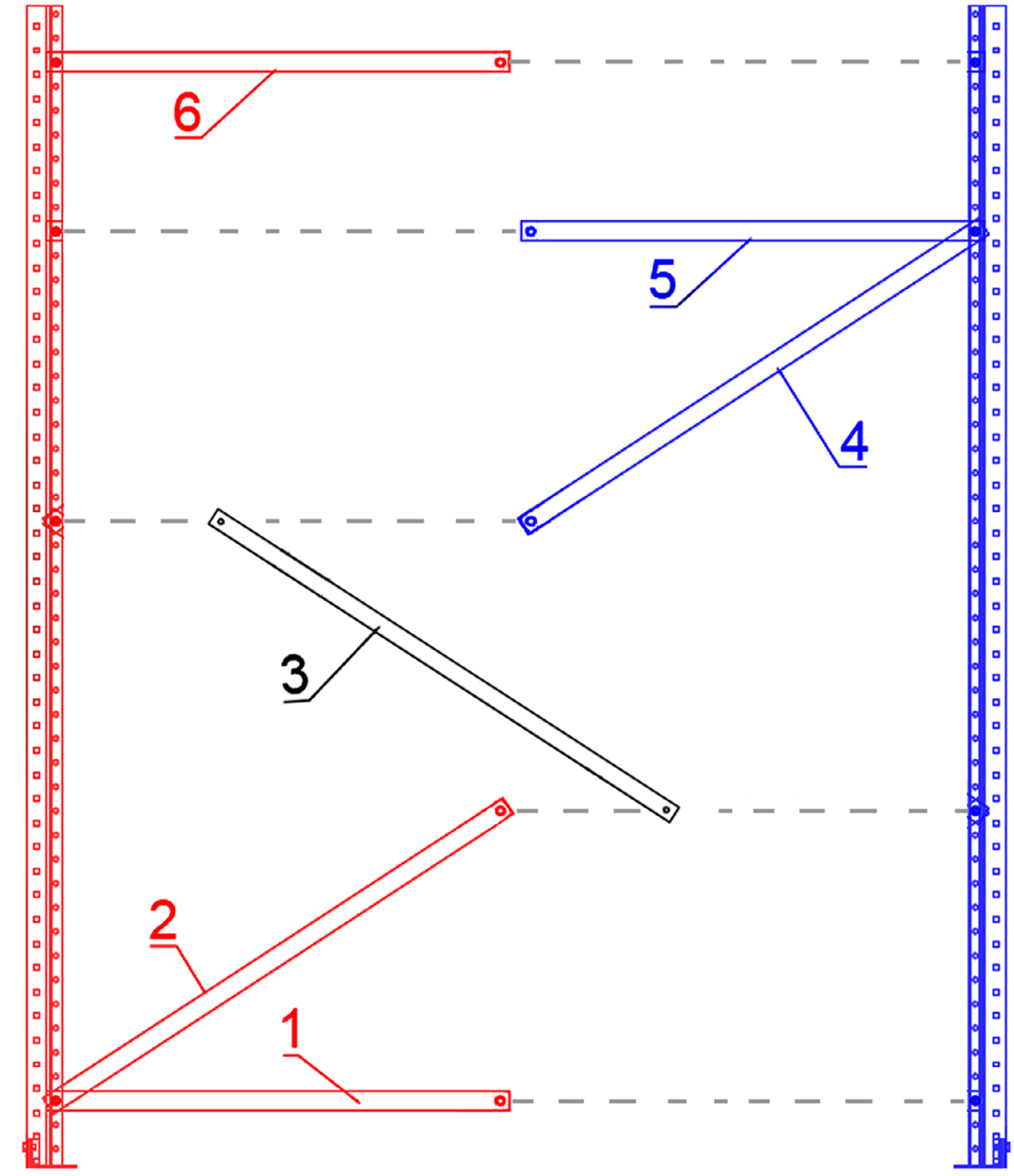

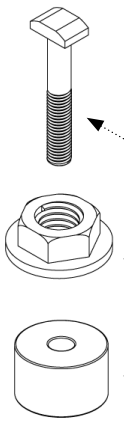

PART NAME	QTY (total)	BREAKDOWN
Footplate	2	
Footplate Hex Bolt [M10 x 1.5, 20mm]	4	
Washer Plate	2	
96" Post	2	
Diagonal Brace for 42" Frame	3	2 attached, 1 loose
Horizontal Brace for 42" Frame	3	3 attached
Shoulder T-Bolt [M10 x 1.5, 65mm] 800 MPa Tensile Strength	8	3 attached, 5 loose
Flanged Nut [M10 x 1.5]	8	3 attached, 5 loose
Rubber Bushing	4	1 attached, 3 loose

Note: Loose refers to unattached components

Assembly Diagram

Model No. 298678
Pallet Rack Upright Frame 42"D x 96"H

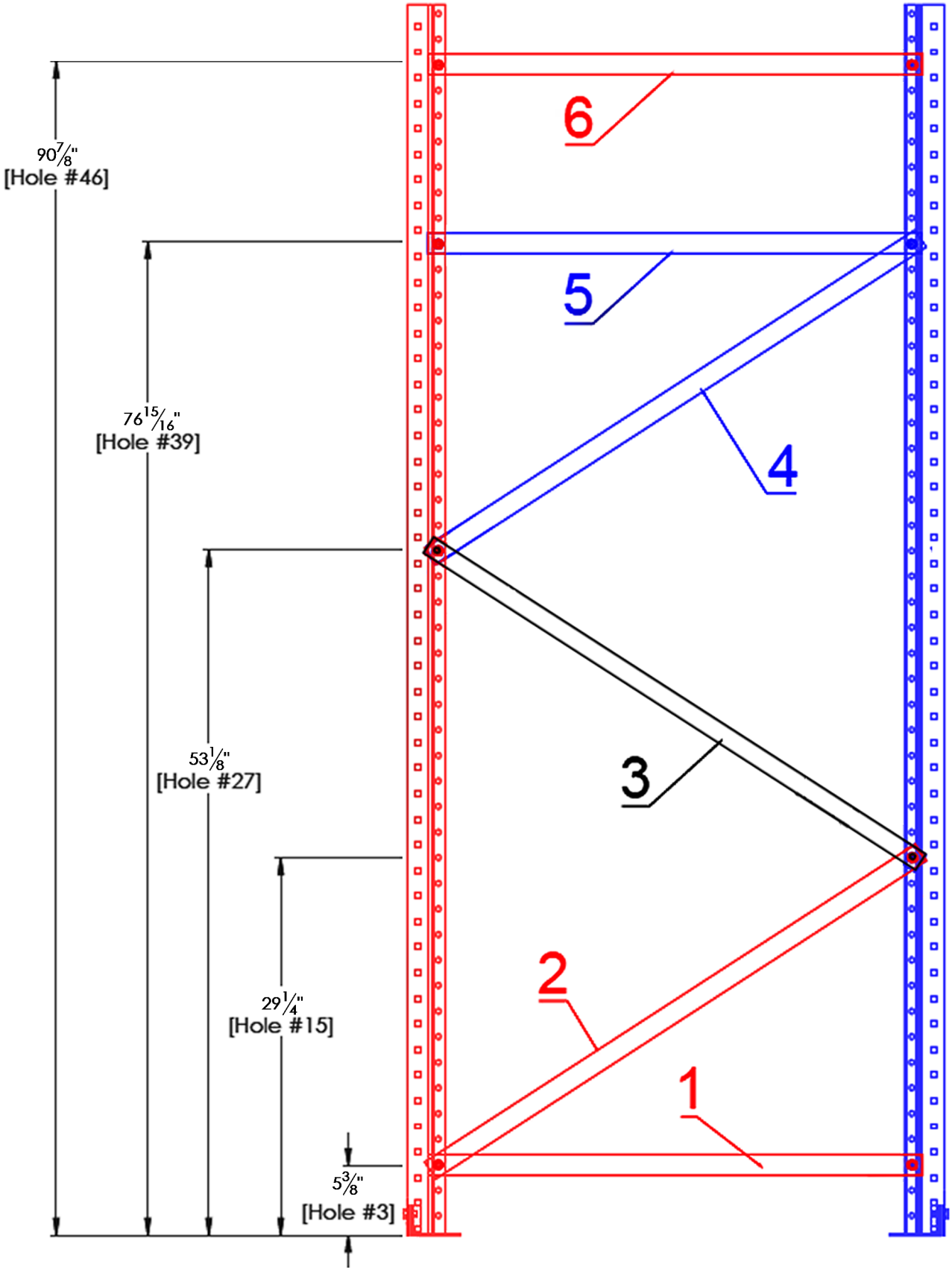

Assembly Diagram

Model No. 298689
Pallet Rack Upright Frame 48"D x 96"H

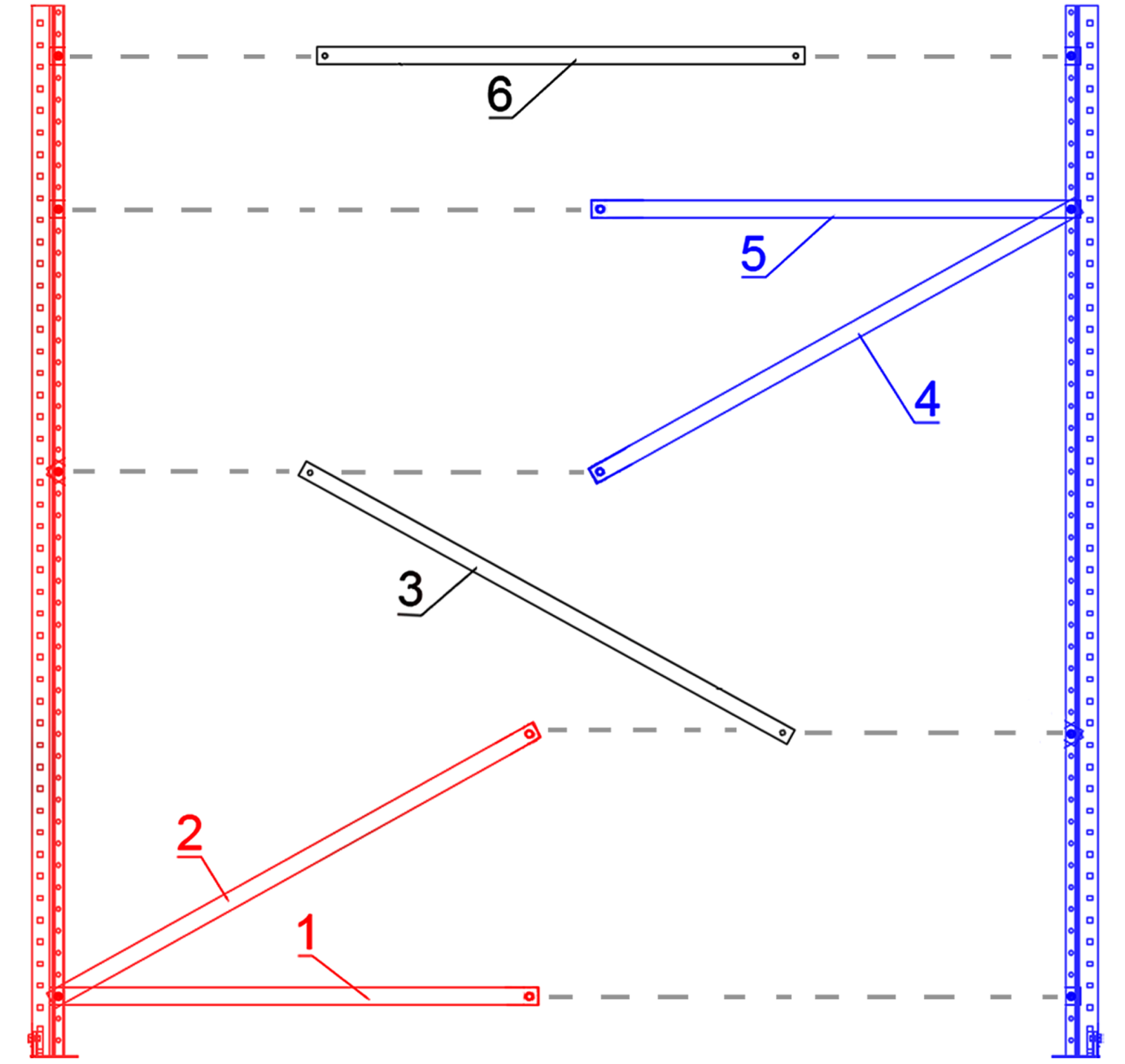

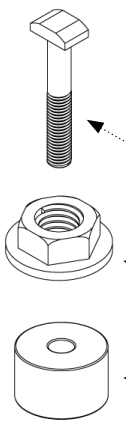

PART NAME	QTY (total)	BREAKDOWN
Footplate	2	
Footplate Hex Bolt [M10 x 1.5, 20mm]	4	
Washer Plate	2	
96" Post	2	
Diagonal Brace for 48" Frame	3	2 attached, 1 loose
Horizontal Brace for 48" Frame	3	2 attached, 1 loose
Shoulder T-Bolt [M10 x 1.5, 65mm] 800 MPa Tensile Strength	8	2 attached, 6 loose
Flanged Nut [M10 x 1.5]	8	2 attached, 6 loose
Rubber Bushing	4	4 loose

Note: Loose refers to unattached components

Assembly Diagram

Model No. 298689
Pallet Rack Upright Frame 48"D x 96"H

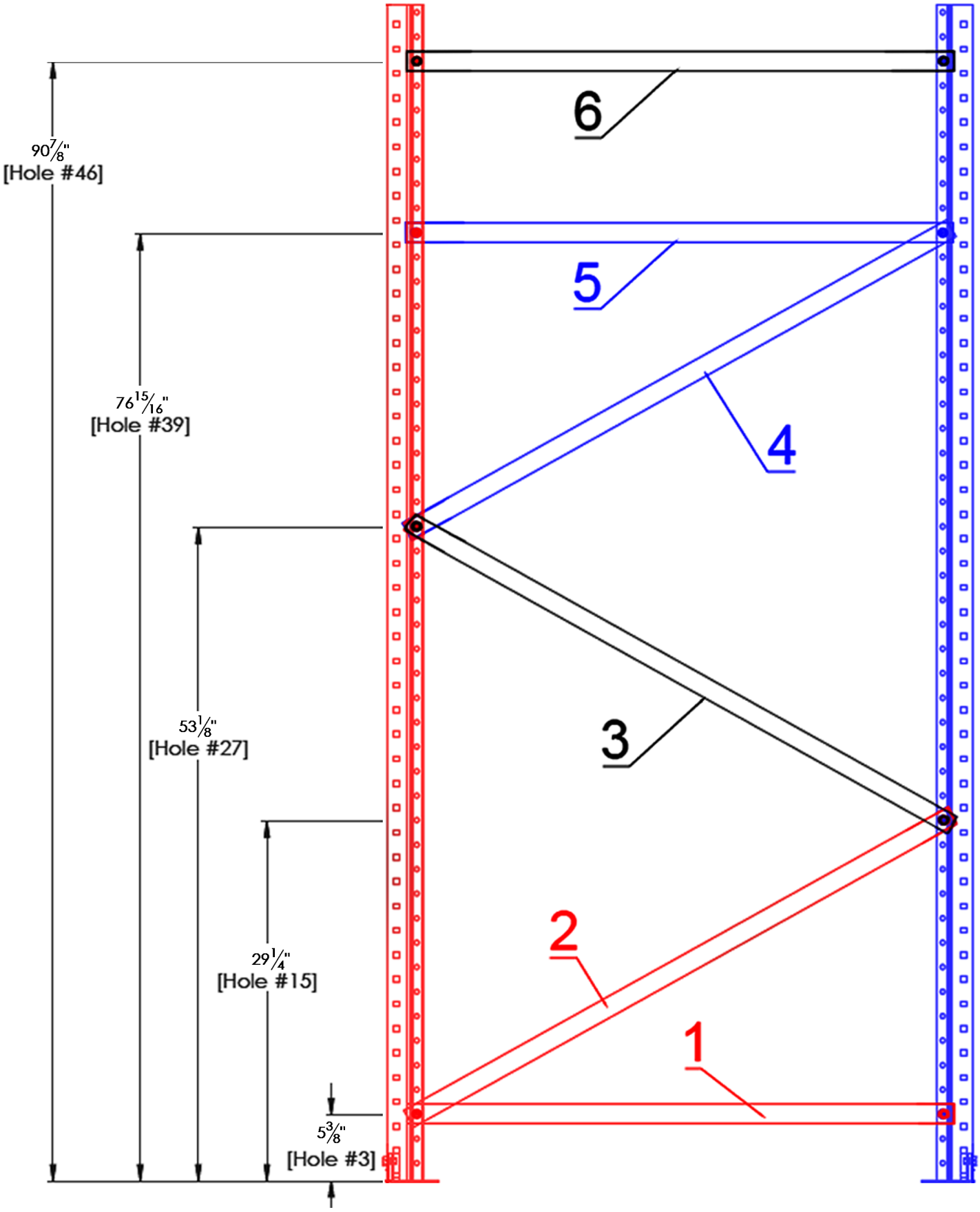

Assembly Diagram

Model No. 298690
Pallet Rack Upright Frame 42"D x 120"H

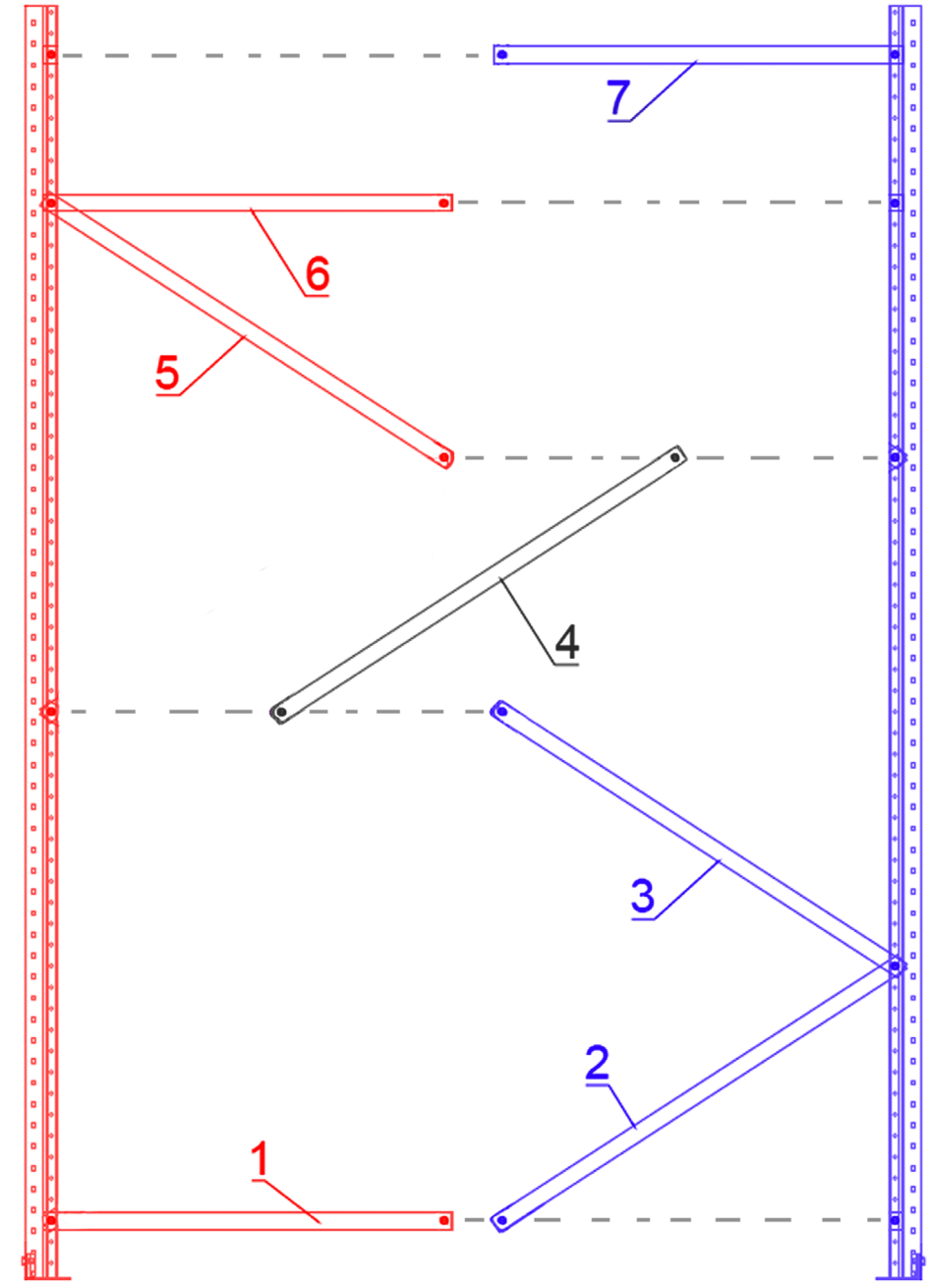

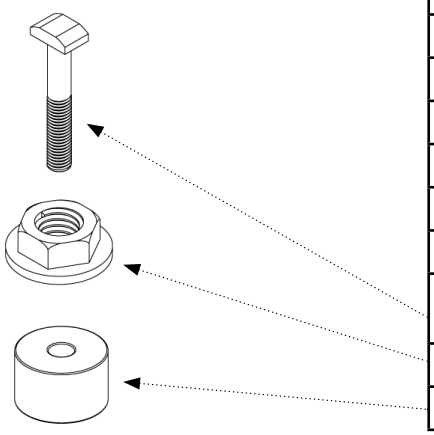

PART NAME	QTY (total)	BREAKDOWN
Footplate	2	
Footplate Hex Bolt [M10 x 1.5, 20mm]	4	
Washer Plate	2	
120" Post	2	
Diagonal Brace for 42" Frame	4	3 attached, 1 loose
Horizontal Brace for 42" Frame	3	3 attached
Shoulder T-Bolt [M10 x 1.5, 65mm] 800 MPa Tensile Strength	9	4 attached, 5 loose
Flanged Nut [M10 x 1.5]	9	4 attached, 5 loose
Rubber Bushing	4	1 attached, 3 loose

Note: Loose refers to unattached components

Assembly Diagram

Model No. 298690
Pallet Rack Upright Frame 42"D x 120"H

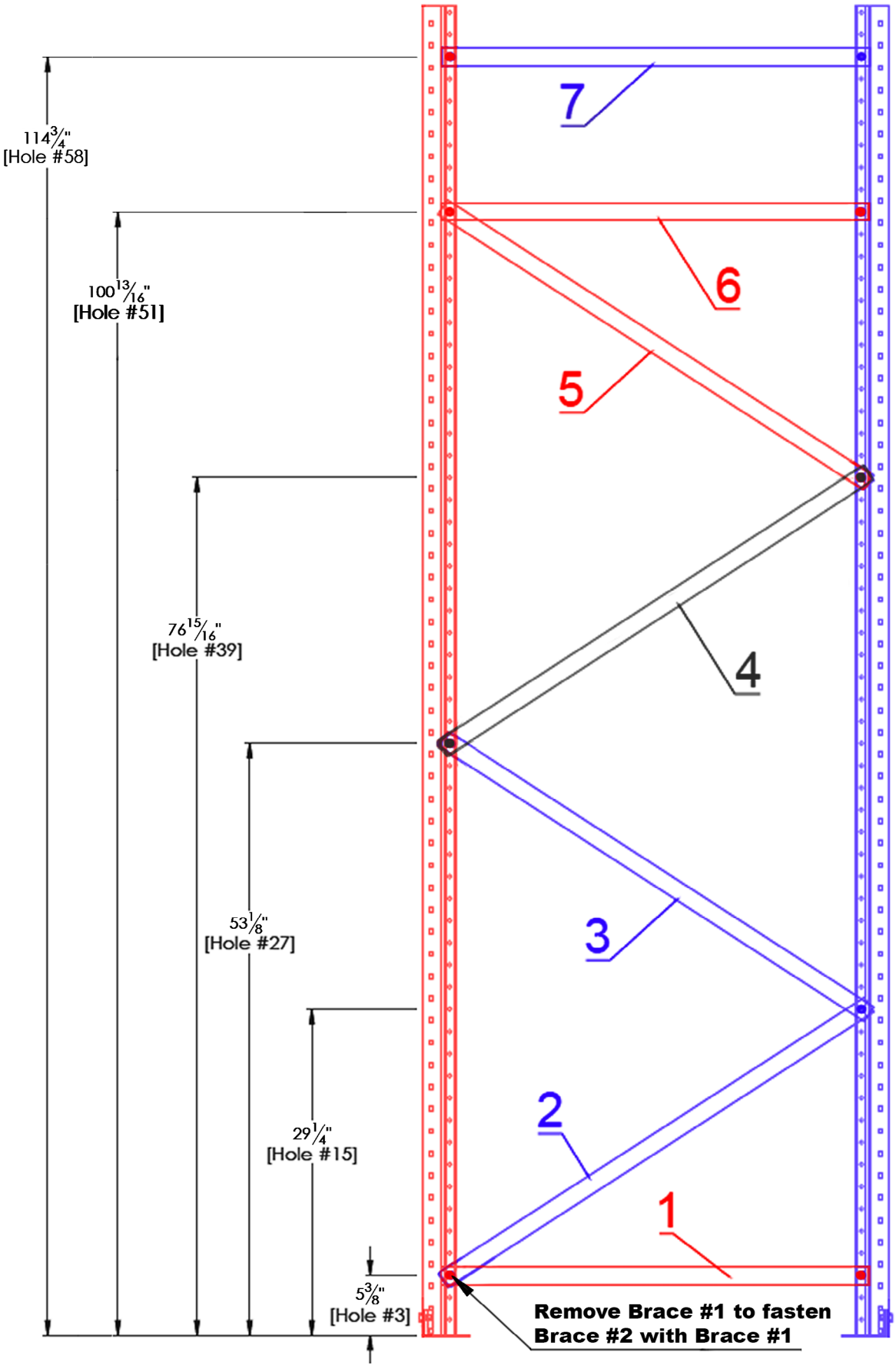

Assembly Diagram

Model No. 298691
Pallet Rack Upright Frame 48"D x 120"H

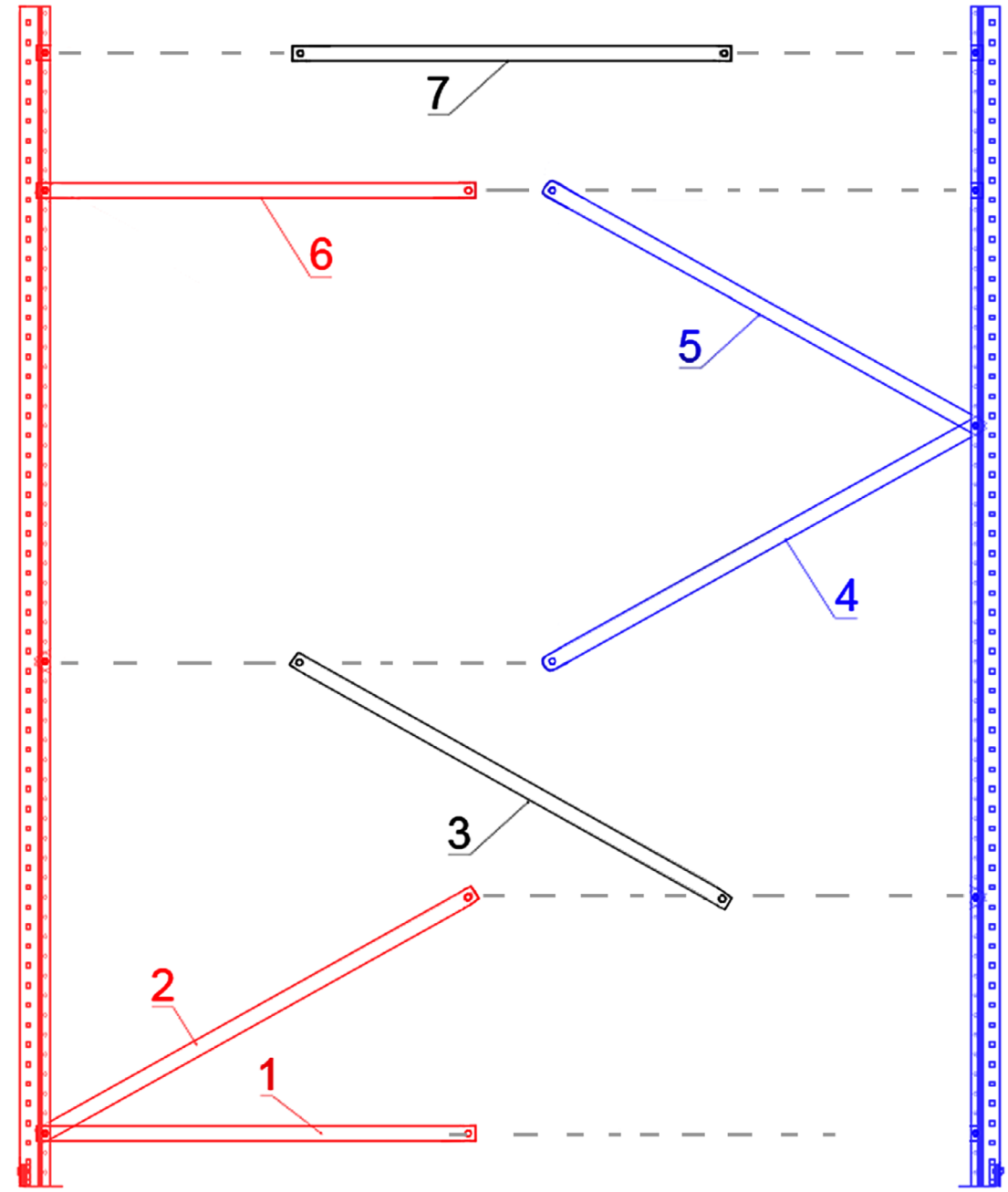

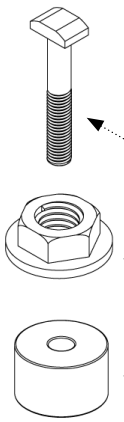

PART NAME	QTY (total)	BREAKDOWN
Footplate	2	
Footplate Hex Bolt [M10 x 1.5, 20mm]	4	
Washer Plate	2	
120" Post	2	
Diagonal Brace for 48" Frame	4	3 attached, 1 loose
Horizontal Brace for 48" Frame	3	2 attached, 1 loose
Shoulder T-Bolt [M10 x 1.5, 65mm] 800 MPa Tensile Strength	9	3 attached, 6 loose
Flanged Nut [M10 x 1.5]	9	3 attached, 6 loose
Rubber Bushing	4	4 loose

Note: Loose refers to unattached components

Assembly Diagram

Model No. 298691
Pallet Rack Upright Frame 48"D x 120"H

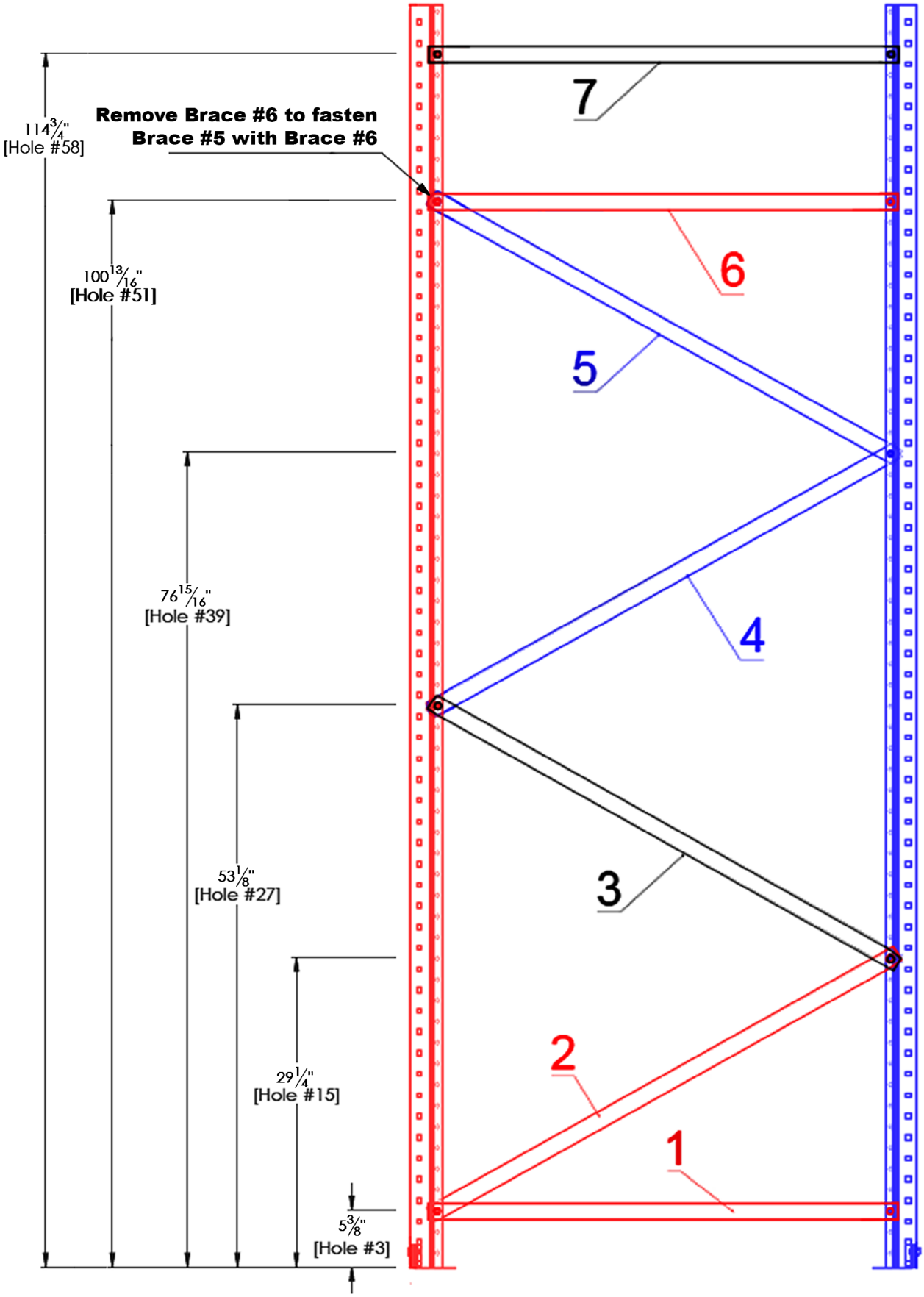

Assembly Diagram

Model No. 298692
Pallet Rack Upright Frame 42"D x 144"H

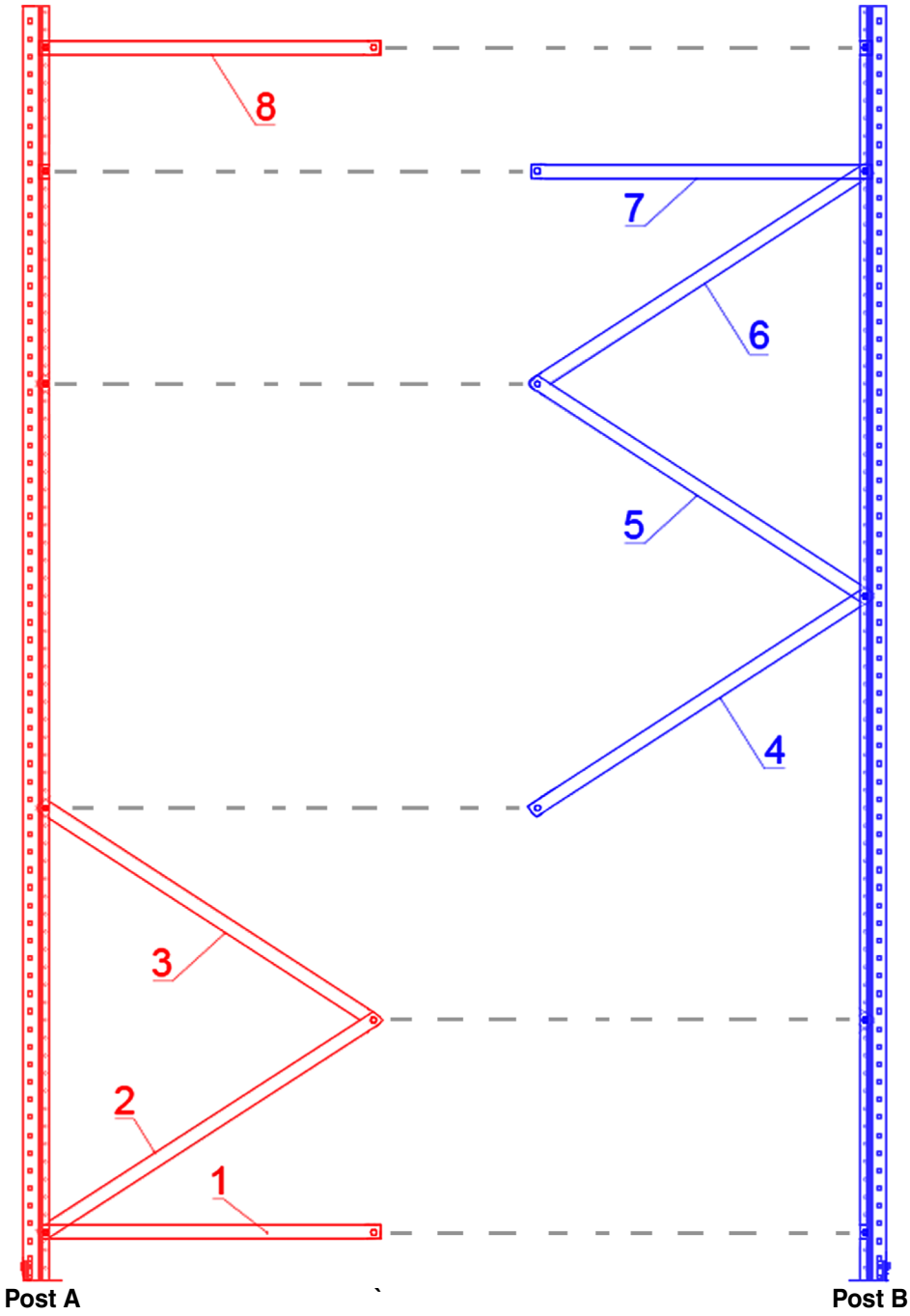

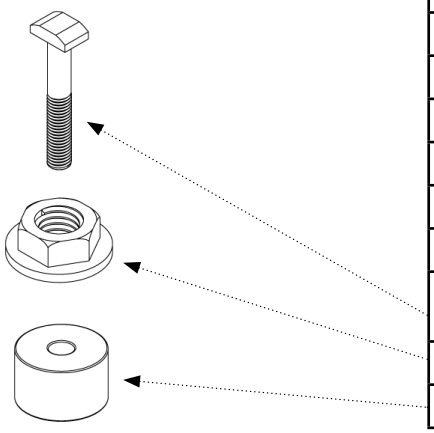

PART NAME	QTY (total)	BREAKDOWN
Footplate	2	
Footplate Hex Bolt [M10 x 1.5, 20mm]	4	
Washer Plate	2	
144" Post	2	
Diagonal Brace for 42" Frame	5	5 attached
Horizontal Brace for 42" Frame	3	3 attached
Shoulder T-Bolt [M10 x 1.5, 65mm] 800 MPa Tensile Strength	10	5 attached, 5 loose
Flanged Nut [M10 x 1.5]	10	5 attached, 5 loose
Rubber Bushing	4	1 attached, 3 loose

Note: Loose refers to unattached components

Assembly Diagram

Model No. 298692

Pallet Rack Upright Frame 42"D x 144"H

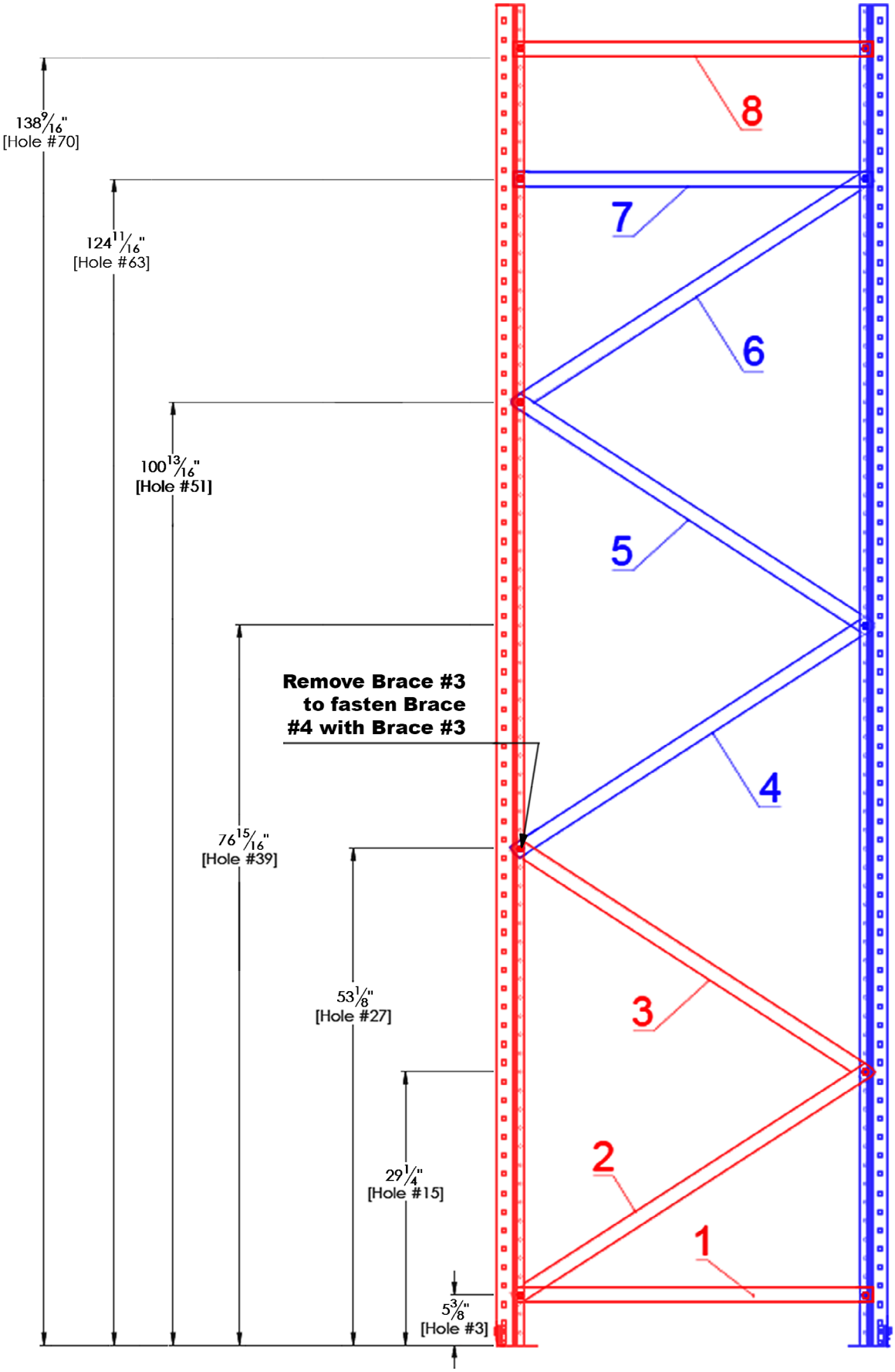

Assembly Diagram

Model No. 298693
Pallet Rack Upright Frame 48"D x 144"H

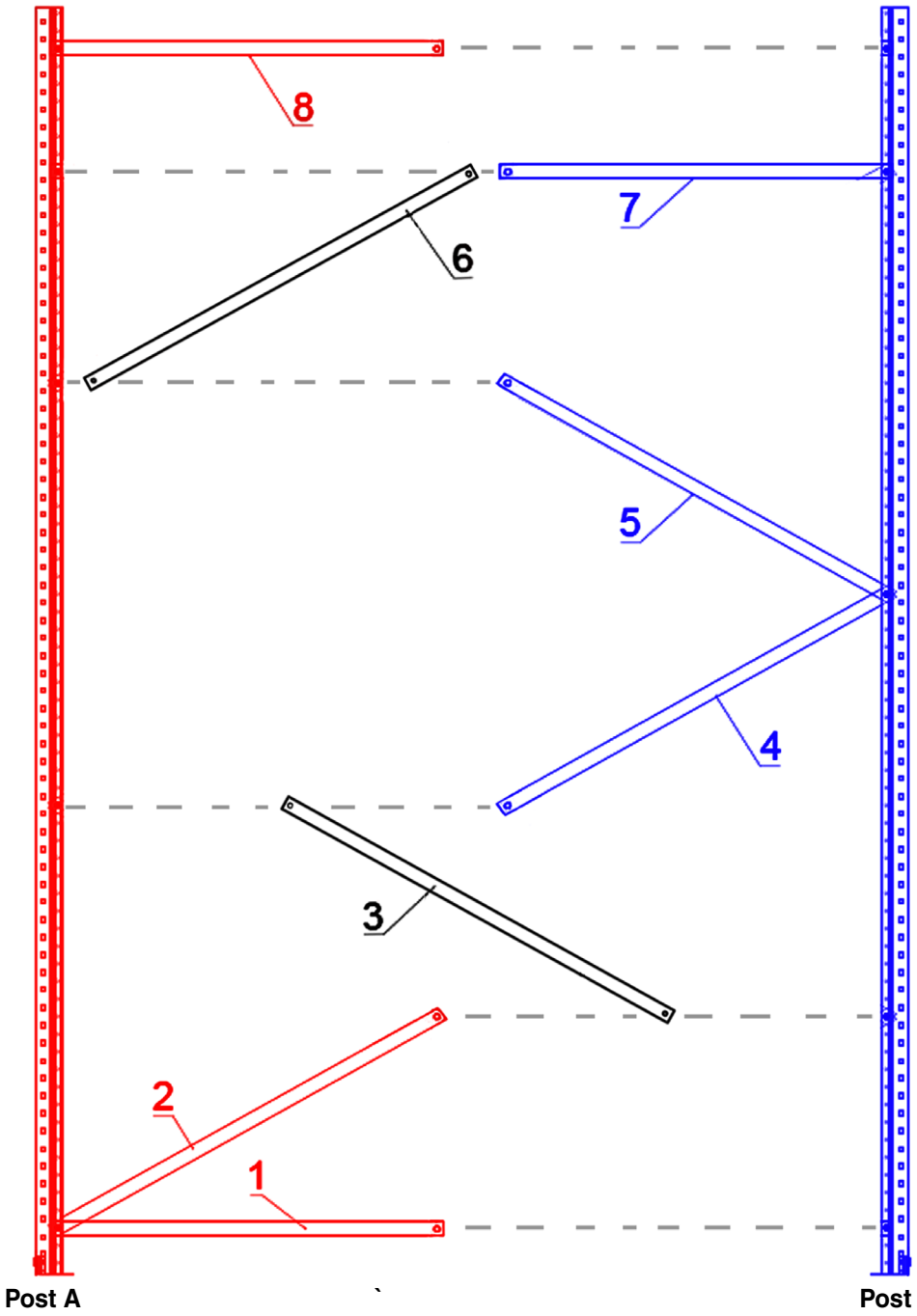

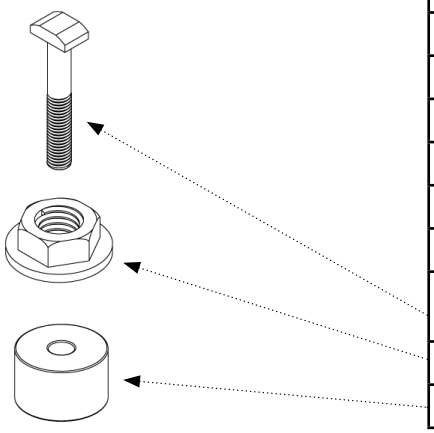

PART NAME	QTY (total)	BREAKDOWN
Footplate	2	
Footplate Hex Bolt [M10 x 1.5, 20mm]	4	
Washer Plate	2	
144" Post	2	
Diagonal Brace for 48" Frame	5	3 attached, 2 loose
Horizontal Brace for 48" Frame	3	3 attached
Shoulder T-Bolt [M10 x 1.5, 65mm] 800 MPa Tensile Strength	10	4 attached, 6 loose
Flanged Nut [M10 x 1.5]	10	4 attached, 6 loose
Rubber Bushing	4	1 attached, 3 loose

Note: Loose refers to unattached components

Assembly Diagram

Model No. 298693
Pallet Rack Upright Frame 48"D x 144"H

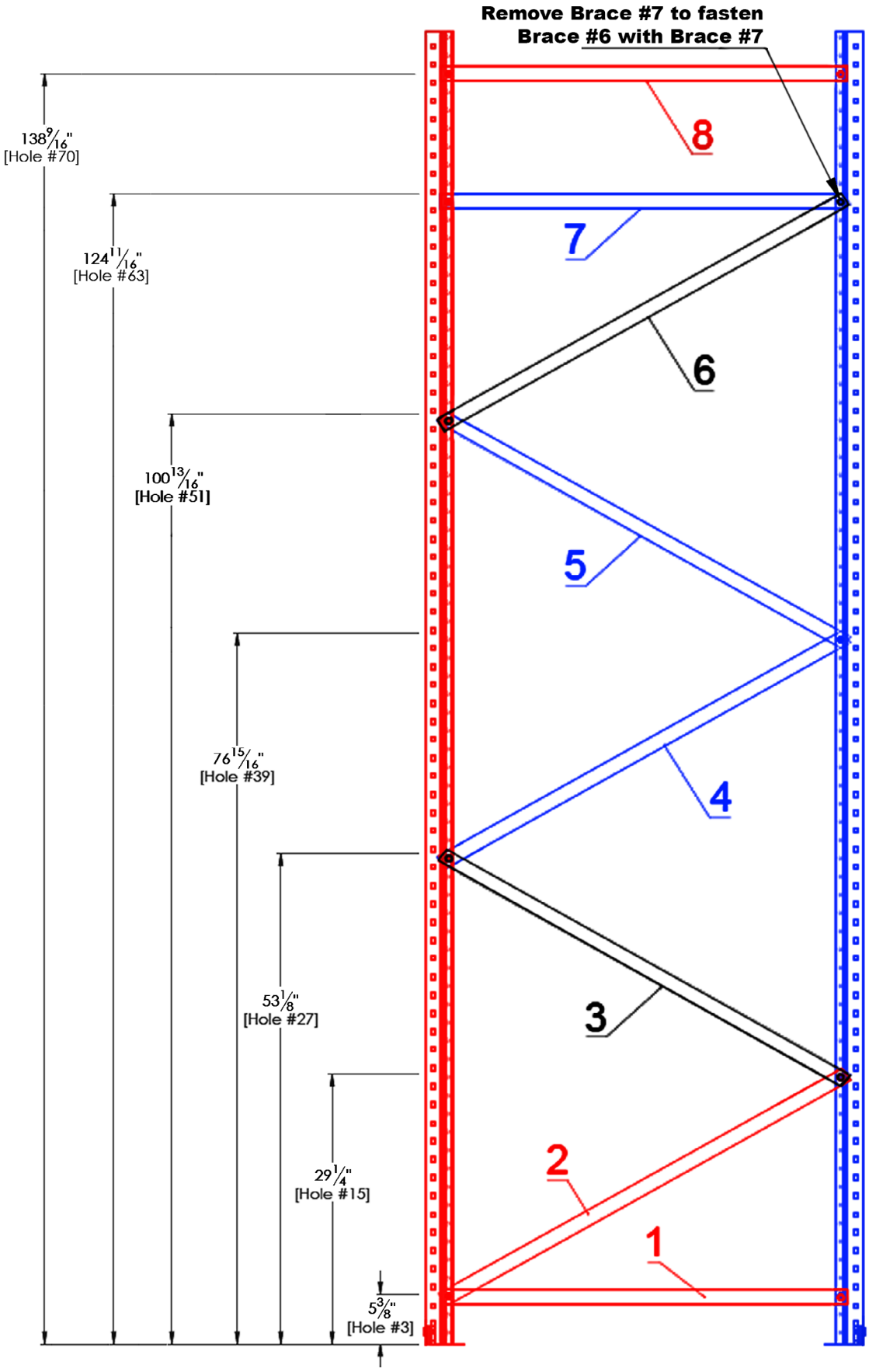

Assembly Diagram

Model No. 298694
Pallet Rack Upright Frame 42"D x 192"H

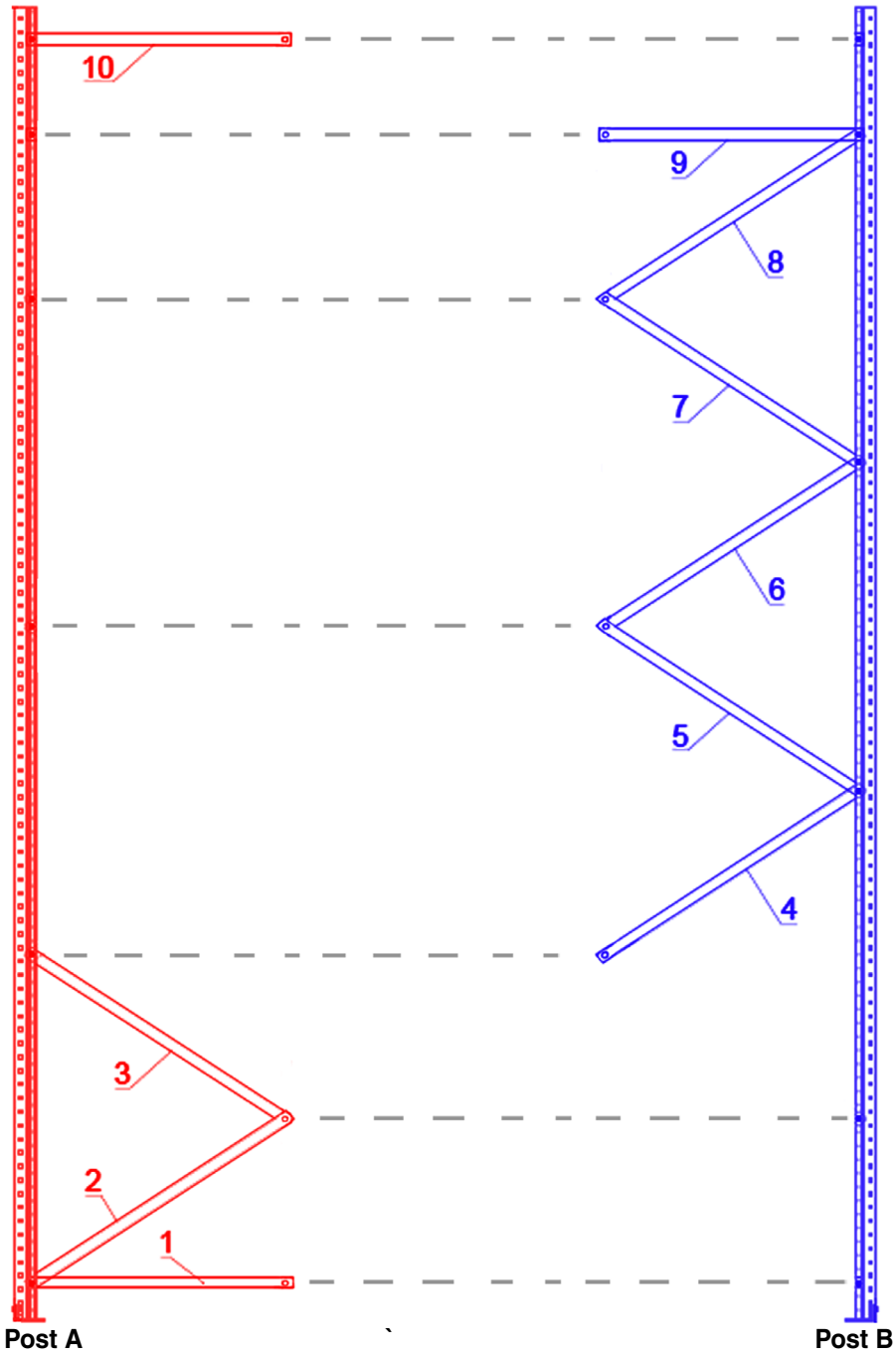

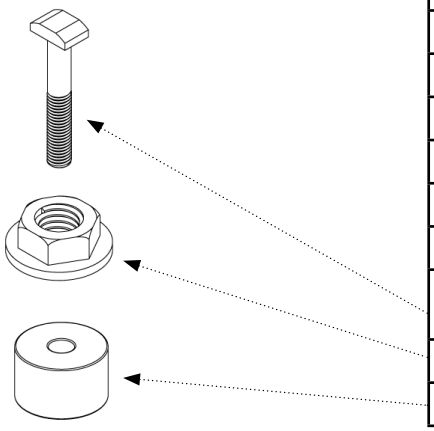

PART NAME	QTY (total)	BREAKDOWN
Footplate	2	
Footplate Hex Bolt [M10 x 1.5, 20mm]	4	
Washer Plate	2	
192" Post	2	
Diagonal Brace for 42" Frame	7	7 attached
Horizontal Brace for 42" Frame	3	3 attached
Shoulder T-Bolt [M10 x 1.5, 65mm] 800 MPa Tensile Strength	12	6 attached, 6 loose
Flanged Nut [M10 x 1.5]	12	6 attached, 6 loose
Rubber Bushing	4	1 attached, 3 loose

Note: Loose refers to unattached components

Assembly Diagram

Model No. 298694
Pallet Rack Upright Frame 42"D x 192"H

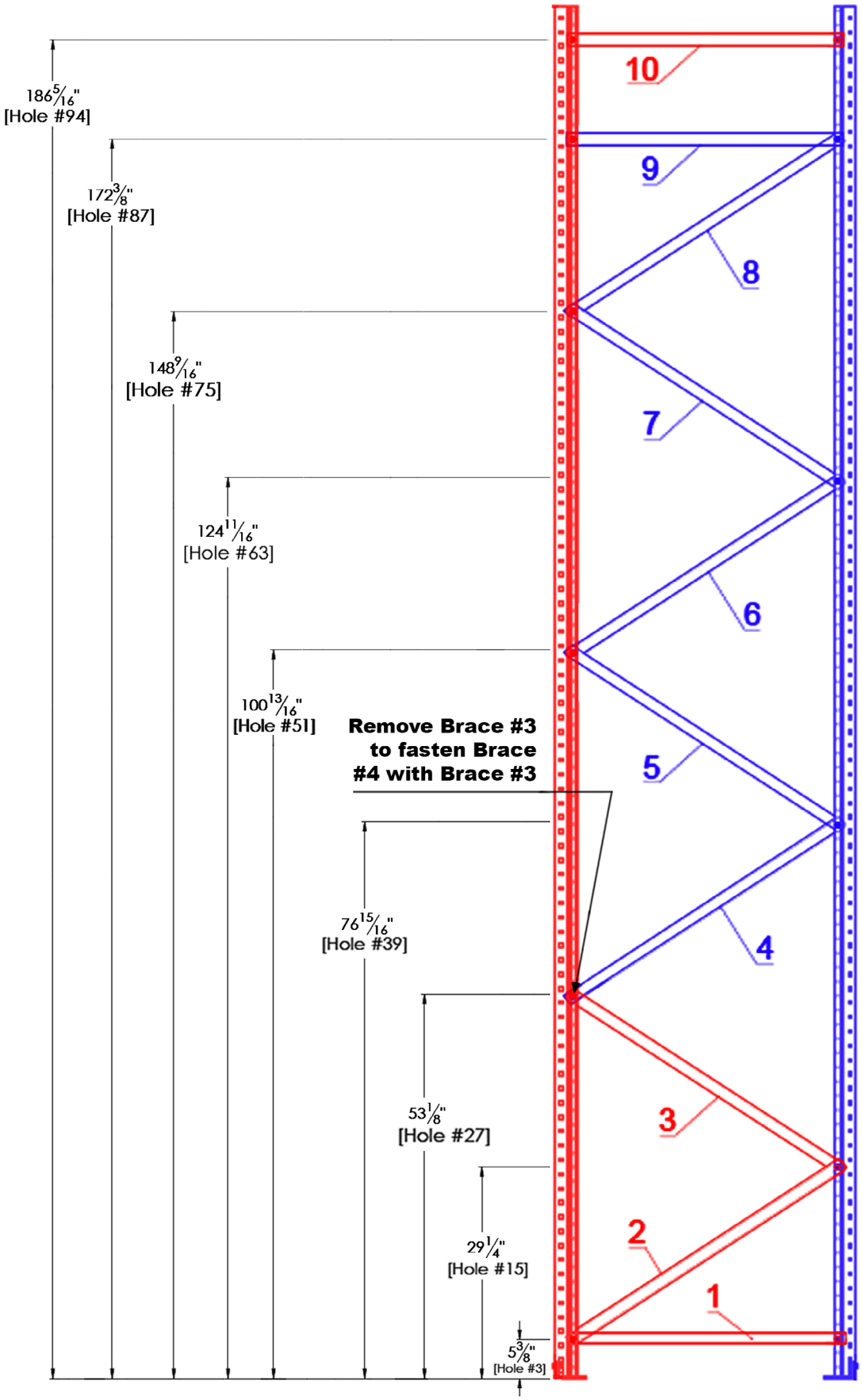

Assembly Diagram

Model No. 413358
Pallet Rack Upright Frame 48"D x 192"H

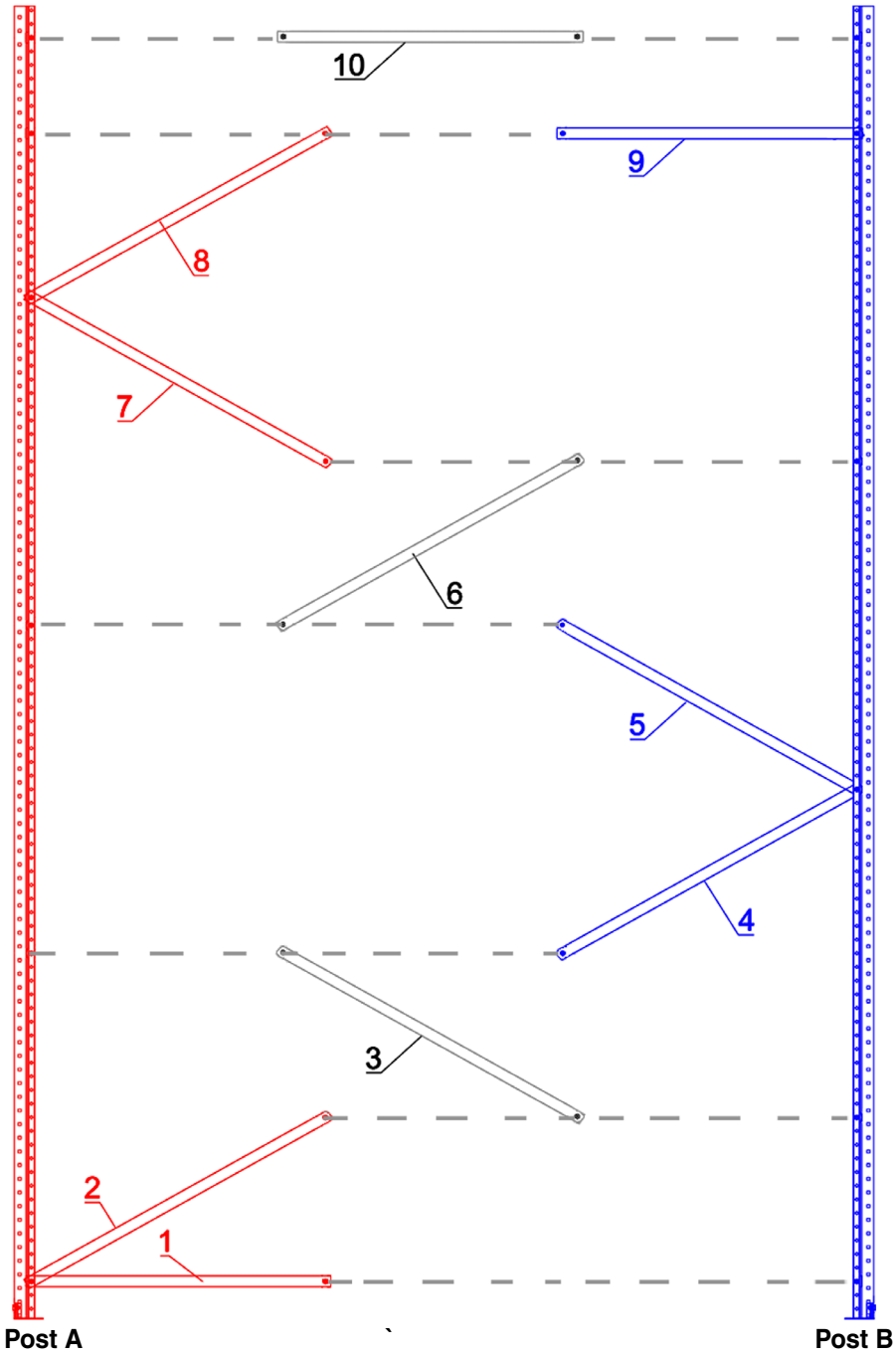

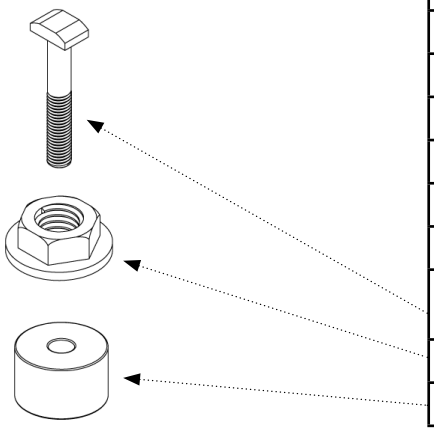

PART NAME	QTY (total)	BREAKDOWN
Footplate	2	
Footplate Hex Bolt [M10 x 1.5, 20mm]	4	
Washer Plate	2	
192" Post	2	
Diagonal Brace for 48" Frame	7	5 attached, 2 loose
Horizontal Brace for 48" Frame	3	2 attached, 1 loose
Shoulder T-Bolt [M10 x 1.5, 65mm] 800 MPa Tensile Strength	12	4 attached, 8 loose
Flanged Nut [M10 x 1.5]	12	4 attached, 8 loose
Rubber Bushing	4	4 loose

Note: Loose refers to unattached components

Assembly Diagram

Model No. 413358
Pallet Rack Upright Frame 48"D x 192"H

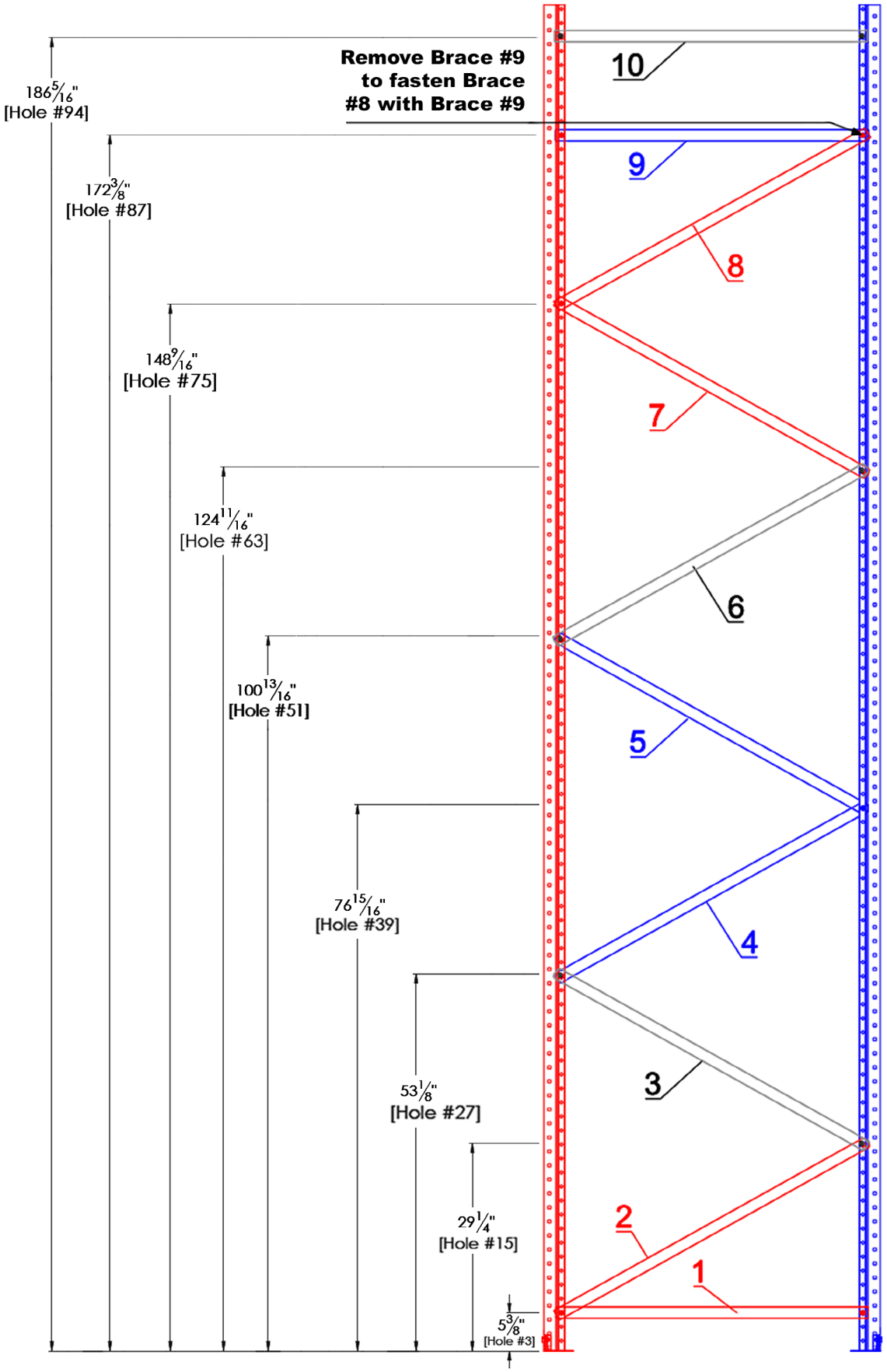

Assembly Diagram

Model No. B3192466
Pallet Rack Upright Frame 24"D x 96"H

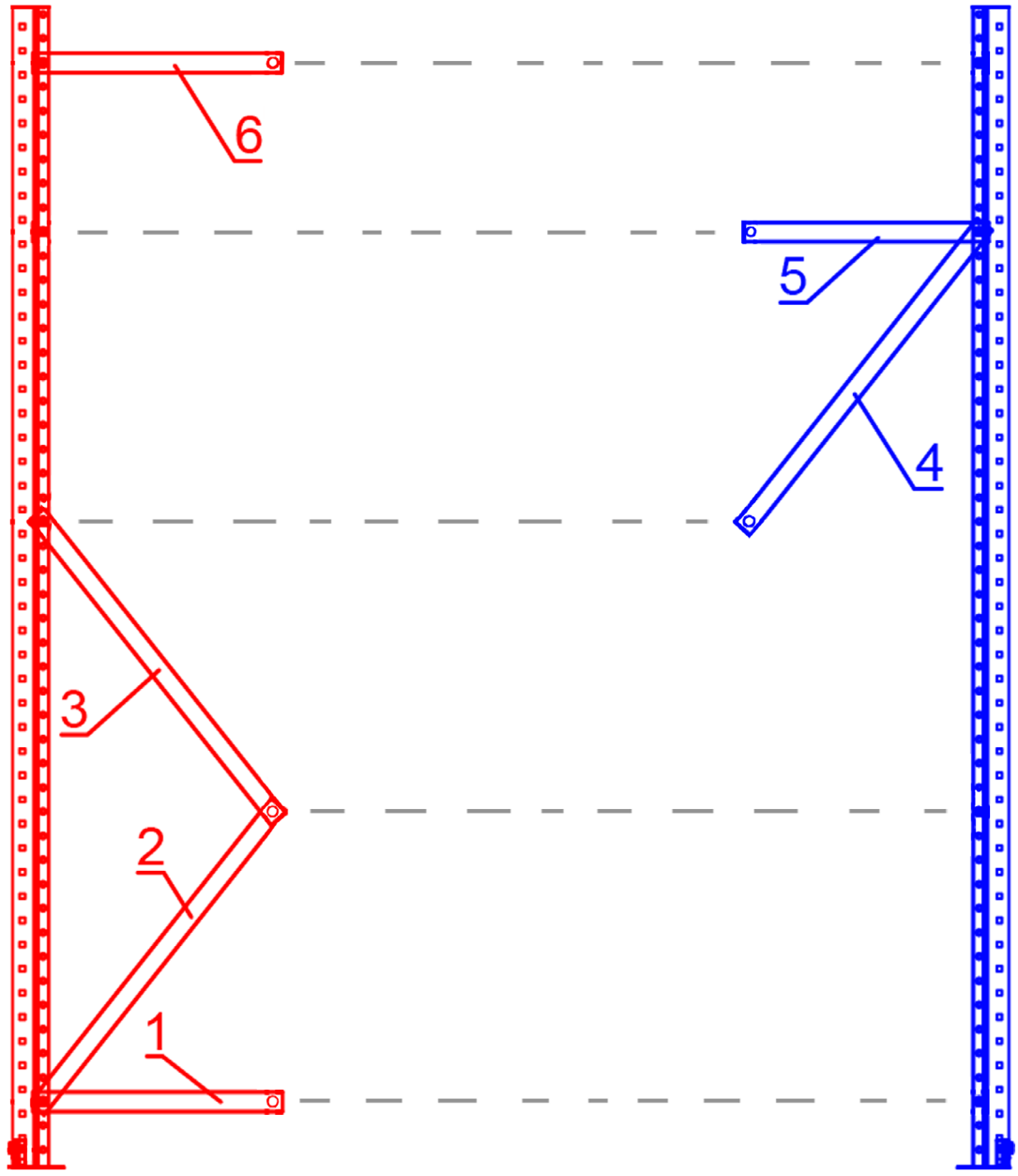

Post A **Post B**

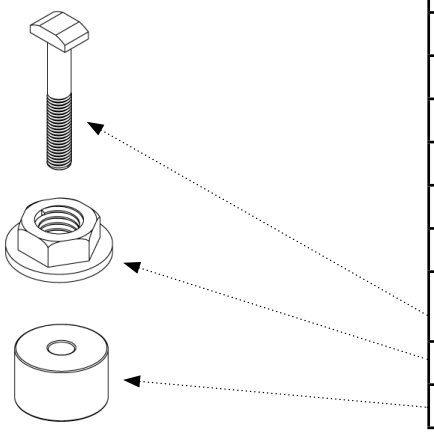

PART NAME	QTY (total)	BREAKDOWN
Footplate	2	
Footplate Hex Bolt [M10 x 1.5, 20mm]	4	
Washer Plate	2	
96" Post	2	
Diagonal Brace for 24" Frame	3	3 attached
Horizontal Brace for 24" Frame	3	3 attached
Shoulder T-Bolt [M10 x 1.5, 65mm] 800 MPa Tensile Strength	8	4 attached, 4 loose
Flanged Nut [M10 x 1.5]	8	4 attached, 4 loose
Rubber Bushing	4	1 attached, 3 loose

Note: Loose refers to unattached components

Assembly Diagram

Model No. B3192466
Pallet Rack Upright Frame 24"D x 96"H

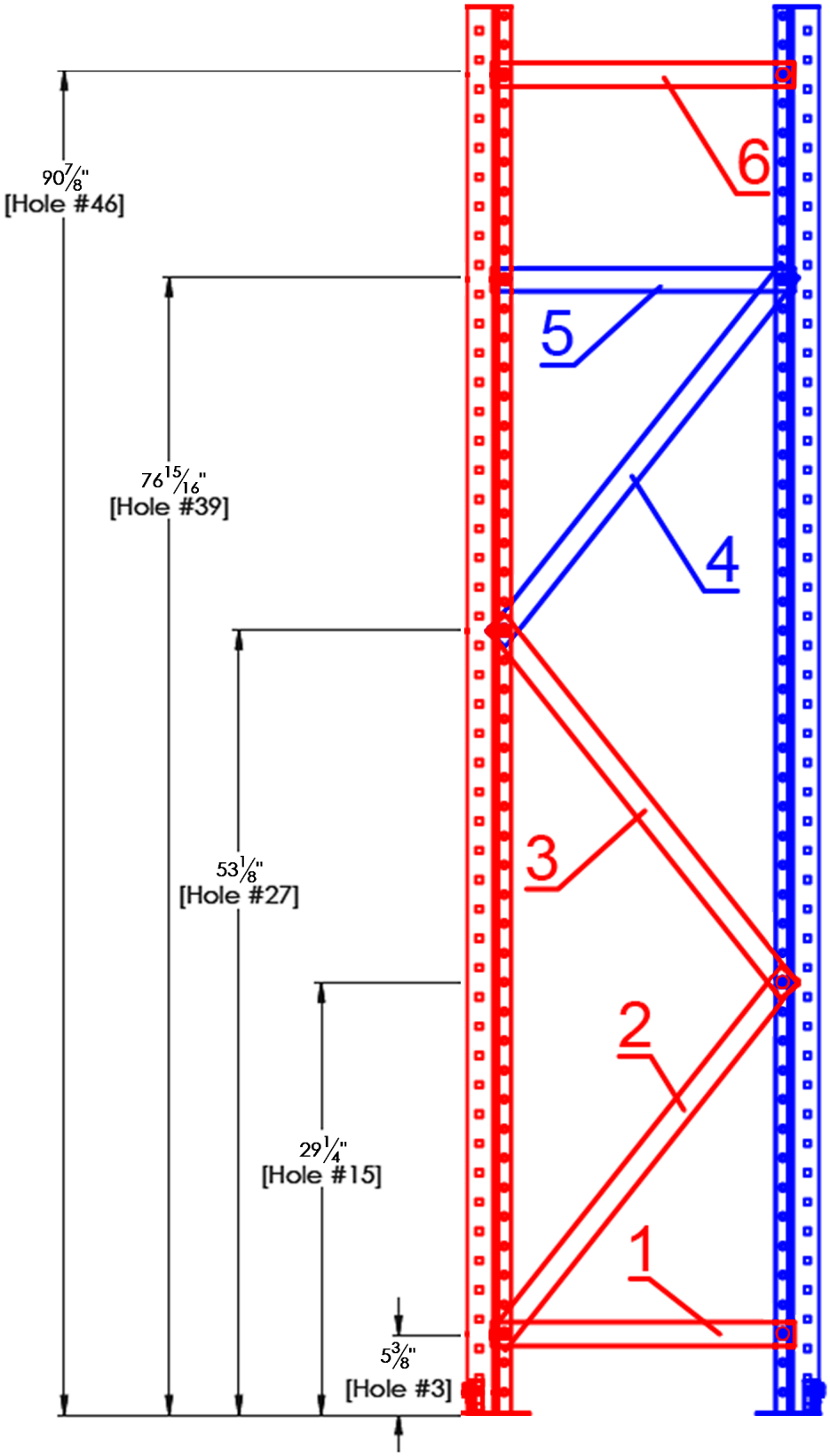

Assembly Diagram

Model No. B3192467
Pallet Rack Upright Frame 24"D x 120"H

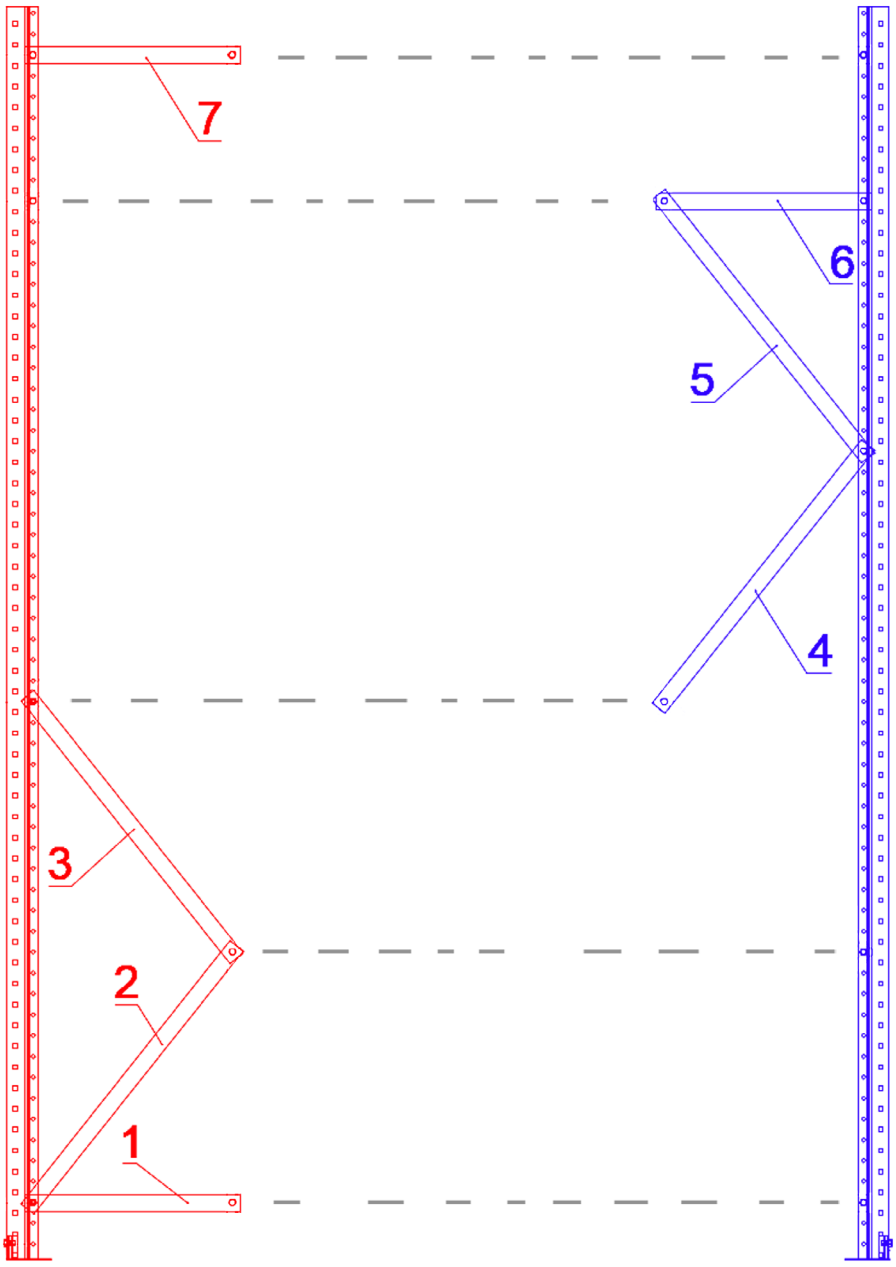

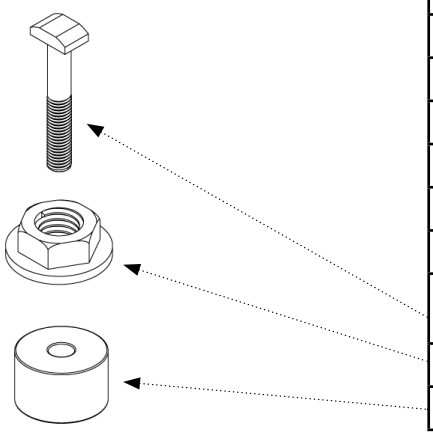

PART NAME	QTY (total)	BREAKDOWN
Footplate	2	
Footplate Hex Bolt [M10 x 1.5, 20mm]	4	
Washer Plate	2	
120" Post	2	
Diagonal Brace for 24" Frame	4	4 attached
Horizontal Brace for 24" Frame	3	3 attached
Shoulder T-Bolt [M10 x 1.5, 65mm] 800 MPa Tensile Strength	9	5 attached, 4 loose
Flanged Nut [M10 x 1.5]	9	5 attached, 4 loose
Rubber Bushing	4	1 attached, 3 loose

Note: Loose refers to unattached components

Assembly Diagram

Model No. B3192467
Pallet Rack Upright Frame 24"D x 120"H

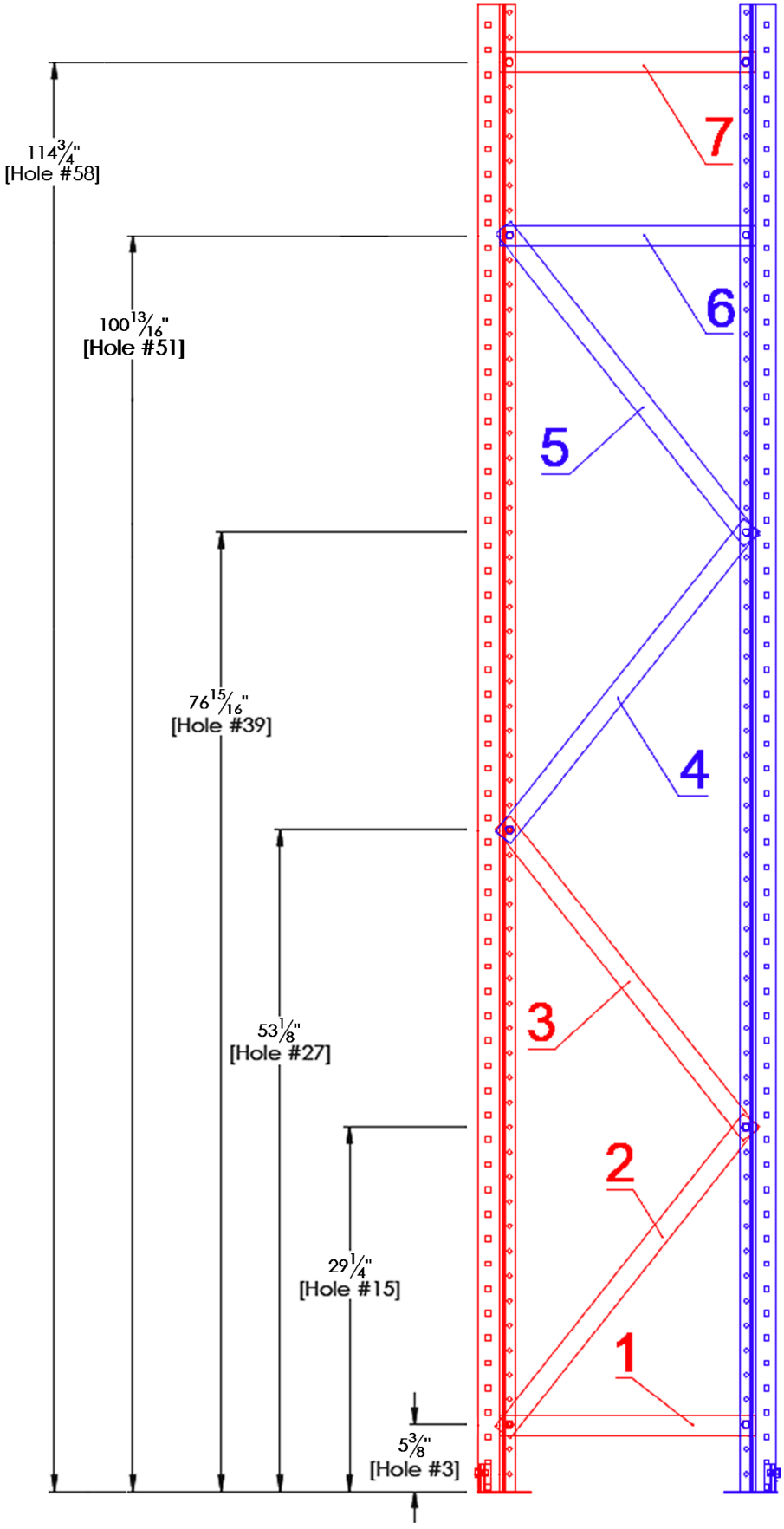

Assembly Diagram

Model No. B3192468
Pallet Rack Upright Frame 24"D x 144"H

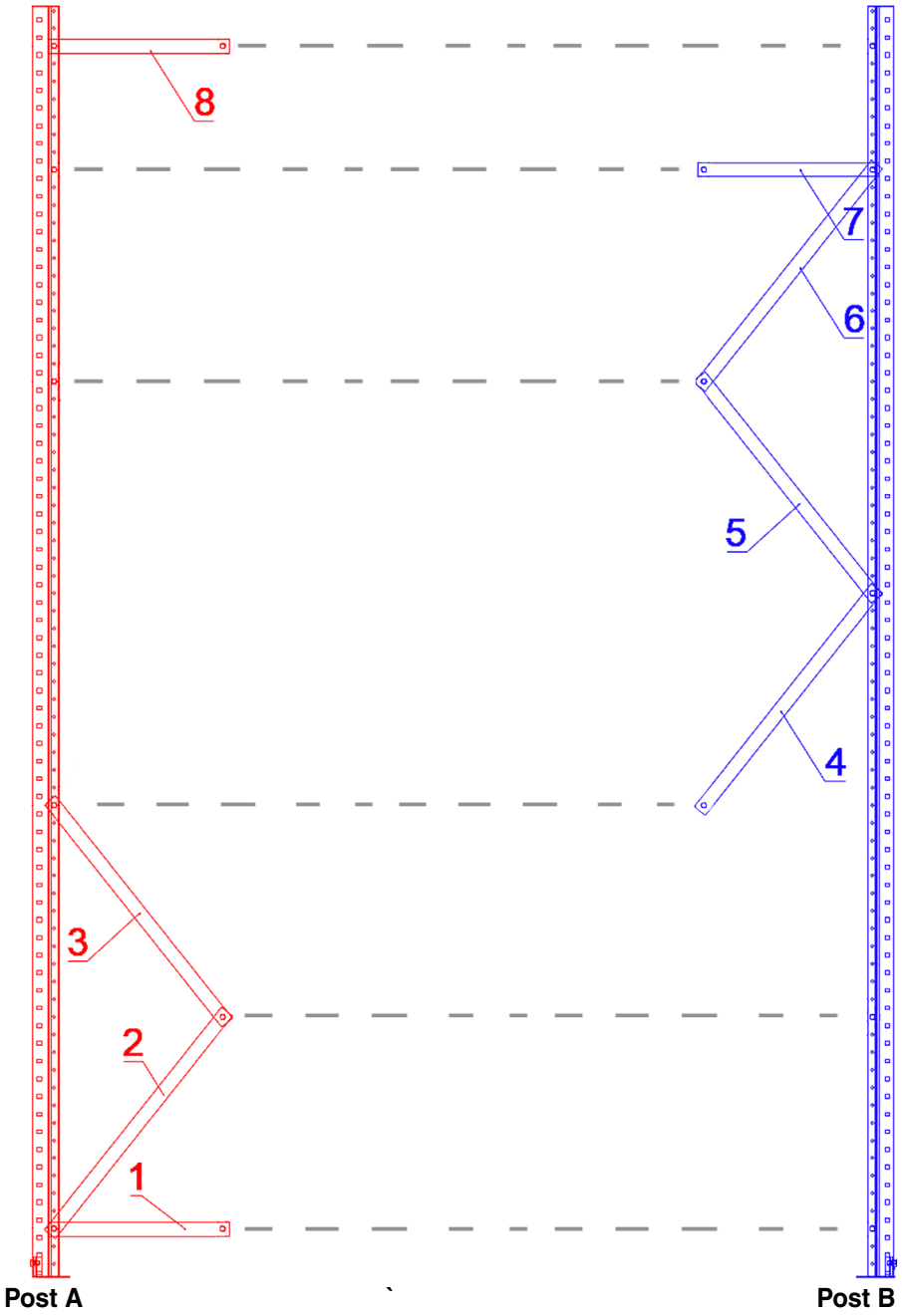

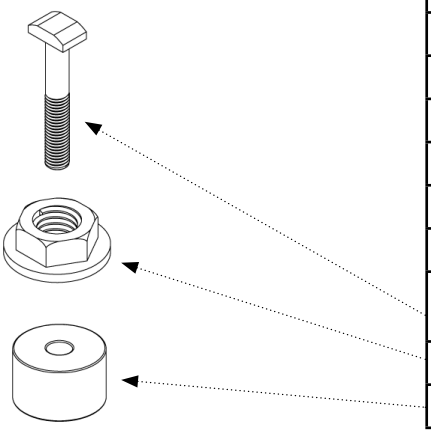

PART NAME	QTY (total)	BREAKDOWN
Footplate	2	
Footplate Hex Bolt [M10 x 1.5, 20mm]	4	
Washer Plate	2	
120" Post	2	
Diagonal Brace for 24" Frame	5	4 attached
Horizontal Brace for 24" Frame	3	3 attached
Shoulder T-Bolt [M10 x 1.5, 65mm] 800 MPa Tensile Strength	10	5 attached, 5 loose
Flanged Nut [M10 x 1.5]	10	5 attached, 5 loose
Rubber Bushing	4	1 attached, 3 loose

Note: Loose refers to unattached components

Assembly Diagram

Model No. B3192468
Pallet Rack Upright Frame 24"D x 144"H

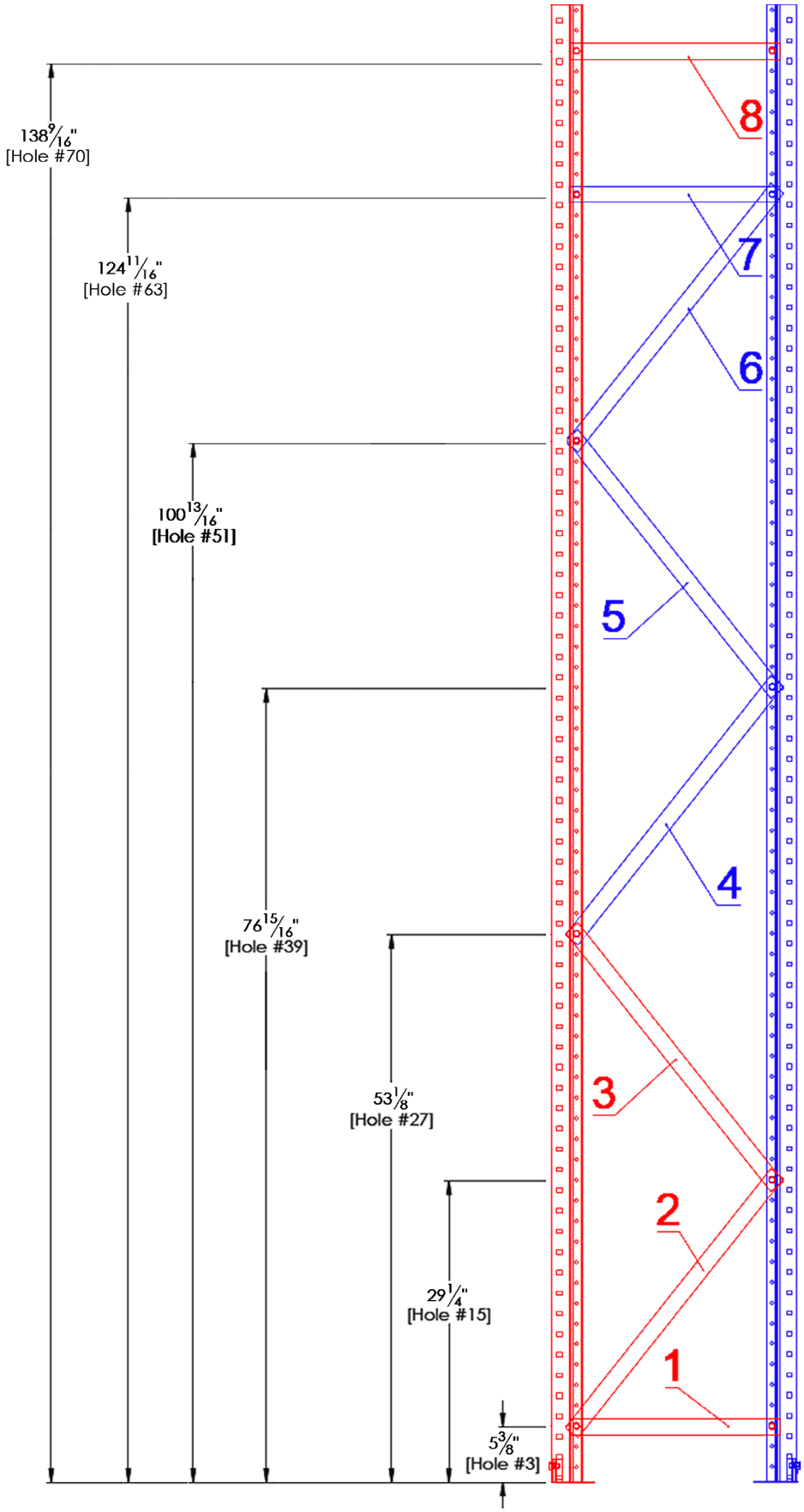



We can supply that.®

Over 1,000,000 products. Industrial strength service.

We can supply that.

REGISTER ONLINE AT
http://www.globalindustrial.com/wr or http://www.globalindustrial.ca/wr
Global Limited 2 Year Warranty

1. LIMITED WARRANTY

Global Equipment Company Inc. (DBA Global Industrial) ("Global") hereby warrants to you, the original purchaser and end user ("you" or "your"), that the products that you purchased which accompany this Limited Warranty ("Products") shall be free from defects in materials and workmanship under normal use consistent with the accompanying documentation for 2 years commencing upon the date of purchase (the "Warranty Period").

Global will repair or replace any Product determined to be defective and which has been returned, as set forth in section 3 herein, to Global. A Product may be replaced with a new or used product and/or current or prior revision. Where Global determines in its sole judgment that repair or replacement of such Product is not reasonable, Global will keep the non-conforming Product and refund to you the amount you paid for such Product. Returned Products shall be subject to the balance of the Warranty Period otherwise applicable. Any reconditioned parts used by Global shall be subject to all the same provisions as otherwise applicable to new parts.

THE FOREGOING DESCRIBES THE SOLE LIABILITY OF GLOBAL, AND YOUR SOLE REMEDY, FOR ANY BREACH OF WARRANTY. IF YOU DO NOT AGREE WITH THE TERMS OF THIS LIMITED WARRANTY, YOU MUST RETURN THE PRODUCTS UNUSED AND IN THEIR ORIGINAL PACKAGING WITHIN THREE (3) DAYS AND YOUR PURCHASE PRICE WILL BE REFUNDED.

2. WARRANTY EXCLUSIONS AND LIMITATION OF LIABILITY

This Limited Warranty does not cover: (i) defects or damages resulting from acts of God, casualty, accident, misuse or abuse, overloading, exceeding the recommended weight capacity, neglect, alterations, modification, service or repair by other than Global or its independent third party service providers, including without limitation by you; (ii) improper assembly or installation or deinstallation, operation or maintenance, improper connections with peripherals or other causes not arising out of defects in the materials or workmanship of Products; (iii) any Product for which the warranty sticker has been removed, modified or defaced; (iv) shipping containers, batteries, cabinets, media, software or accessories; (v) normal wear and tear; (vi) damage to or loss of repaired or replaced Products during shipping by Global except when such damage or loss is caused by poor or inadequate packaging by Global; or (vii) Products purchased outside the United States or Canada.

UNDER NO CIRCUMSTANCES WILL GLOBAL BE LIABLE FOR ANY LOSS OF USE, INTERRUPTION OF BUSINESS OR ANY INDIRECT, SPECIAL, INCIDENTAL, PUNITIVE OR CONSEQUENTIAL DAMAGES OF ANY KIND (INCLUDING LOST PROFITS) REGARDLESS OF THE FORM OF ACTION WHETHER IN CONTRACT, TORT (INCLUDING NEGLIGENCE), STRICT PRODUCT LIABILITY OR OTHERWISE, EVEN IF GLOBAL HAS BEEN ADVISED OF THE POSSIBILITY OF SUCH DAMAGES. IN NO EVENT SHALL THE TOTAL LIABILITY OF GLOBAL HEREUNDER EXCEED THE GREATER OF $50 OR THE AMOUNT YOU ACTUALLY PAID FOR THE PRODUCT GIVING RISE TO SUCH LIABILITY, REGARDLESS OF THE CAUSE OF ACTION, IN CONTRACT, TORT, STRICT LIABILITY OR OTHERWISE. NOT ALL JURISDICTIONS ALLOW SUCH LIMITATIONS OF DAMAGES SO THE FOREGOING LIMITATIONS MAY NOT APPLY TO YOU.

3. PROCEDURE FOR WARRANTY SERVICE

Prior to returning any Products to Global for warranty service, you must first contact Global, by telephone at (800) 645-2986 (US) or (888) 645-0878 (Canada) to confirm that such Products are covered by this Limited Warranty. If such Products are so covered, you shall obtain from Global a return materials authorization ("RMA") number and shipping instructions prior to any shipment of such Products to Global, and you must include such RMA number with any corresponding Product shipment, along with a true and correct copy of the original receipt showing the date of Product purchase by you, and a detailed, written description of any associated Product problems.

Please note that you are responsible for all shipping charges incurred in returning an item for exchange or repair. Global shall pay for return shipping of repaired and/or replaced Products to addresses within the United States and Canada only, and return shipments to all other addresses outside of the United States or Canada is your responsibility. If Global determines that any Product is not covered by this Limited Warranty, you must pay all parts, labor charges and return shipping for such Product.

4. WARRANTY DISCLAIMER AND LIMITATIONS

EXCEPT AND TO THE EXTENT EXPRESSLY SET FORTH ABOVE THERE ARE NO WARRANTIES, EXPRESS OR IMPLIED, INCLUDING BUT NOT LIMITED TO, ANY WARRANTIES OF MERCHANTABILITY OR FITNESS FOR A PARTICULAR PURPOSE AND GLOBAL EXPRESSLY DISCLAIMS ALL WARRANTIES NOT STATED HEREIN.

EXCEPT AND TO THE EXTENT EXPRESSLY SET FORTH ABOVE, THE PRODUCTS ARE PROVIDED ON AN "AS IS" BASIS, AND GLOBAL MAKES NO ADDITIONAL WARRANTIES, EXPRESS, IMPLIED, ARISING FROM COURSE OF DEALING OR USAGE OF TRADE, OR STATUTORY, AS TO THE PRODUCTS OR ANY MATTER WHATSOEVER. THIS IS A LIMITED WARRANTY AND IS THE ONLY WARRANTY MADE BY GLOBAL. THE AGENTS, EMPLOYEES, DISTRIBUTORS, AND DEALERS OF GLOBAL ARE NOT AUTHORIZED TO MAKE MODIFICATIONS TO THIS LIMITED WARRANTY, OR MAKE ADDITIONAL WARRANTIES BINDING ON GLOBAL. ACCORDINGLY, ADDITIONAL STATEMENTS SUCH AS DEALER ADVERTISING OR PRESENTATION, WHETHER ORAL OR WRITTEN, DO NOT CONSTITUTE WARRANTIES BY GLOBAL AND SHOULD NOT BE RELIED UPON. GLOBAL DOES NOT WARRANT THAT THE PRODUCTS WILL OPERATE WITHOUT FAILURE, OR THAT THE PRODUCTS WILL MEET YOUR NEEDS OR EXPECTATIONS. NOT ALL JURISDICTIONS ALLOW SUCH WARRANTY LIMITATIONS SO THE FOREGOING LIMITATIONS MAY NOT APPLY TO YOU.

5. CHOICE OF LAW AND JURISDICTION

FOR PURCHASES WITHIN THE US - This Limited Warranty shall be subject solely to the laws of the State of New York as applied to contracts entered into in the State of New York between New York residents. Any dispute arising hereunder shall be subject to the sole jurisdiction of the State and Federal Courts located in Nassau County, New York. The parties hereby consent to the personal jurisdiction of such courts.

FOR PURCHASES WITHIN CANADA - This Limited Warranty shall be subject solely to the laws of the Province of Ontario. Any dispute arising hereunder shall be subject to the sole jurisdiction of Ontario, Canada. The parties hereby consent to the personal jurisdiction of such courts.

WARNING LABEL PRINT-OUT

Instructions: Print out warning the label from this page (use the booklet option when printing) or make a photocopy of this page. Recommended label size: 2-5/8" x 5-9/16" (68 x 142 mm).

⚠ WARNING

• Do not modify or alter uprights without consulting a professional and/or seeking approval from Global Industrial.
• Do not climb on or hang objects from uprights. Serious injury or death may occur.
• Inspect bolts and connections regularly for tightness. Loose bolts can lead to structural failure.
• Report all damage to management.

⚠ CAUTION

•Conduct regular inspections to check for:
a) Proper application and use.
b) Loaded within allowable limits.
c) Damage or dislodgement of structure or components.
• Do not use damaged or bent uprights. Replace any components showing signs of wear or deformation immediately.
• Do not place uneven or irregularly shaped items on pallets. Balance loads evenly to prevent shifting.
• Do not stack items beyond designated height markers. Overloading may cause instability.
• Protect and use pallet racks with Global Industrial guarding and accessories.

GLOBAL™ INDUSTRIAL


75
GLOBAL INDUSTRIAL
ANNIVERSARY