GLOBAL INDUSTRIAL
We can supply that.

US: 888-628-3466
Canada: 888-645-2986
Mexico: 01.800.681.6940

PICNIC TABLE
ASSEMBLY INSTRUCTION

EXPANDED METAL PICNIC TABLE
MODEL: 277153BK/BL/GN/GY/RDKD

PERFORATED METAL PICNIC TABLE
MODEL: 694555BK/BL/GN/GY/RDKD

CONTENTS

REF	QTY	DESCRION
1	2	Leg
2	1	Top
3	2	Leg Support
4	2	Bench
H1	16	M8X1.25X24mm Lg.Hex Bolt
H2	12	M10X1.5X24mm Lg.Hex Bolt
H3	32	Plain Washer
H4	24	Plain Washer
H5	16	M8X1.25 Nyllon Lock Nut
H6	12	M10X1.5 Nyllon Lock Nut

⚠WARNING ⚠

- Assembly and installation of equipment should be performed by 2 people.
- Workers should use OSHA approved safety and lifting equipment.

⚠WARNING ⚠

- This product contains chemicals which are known by the state of California to cause cancer, birth defects or other reproductive harm.

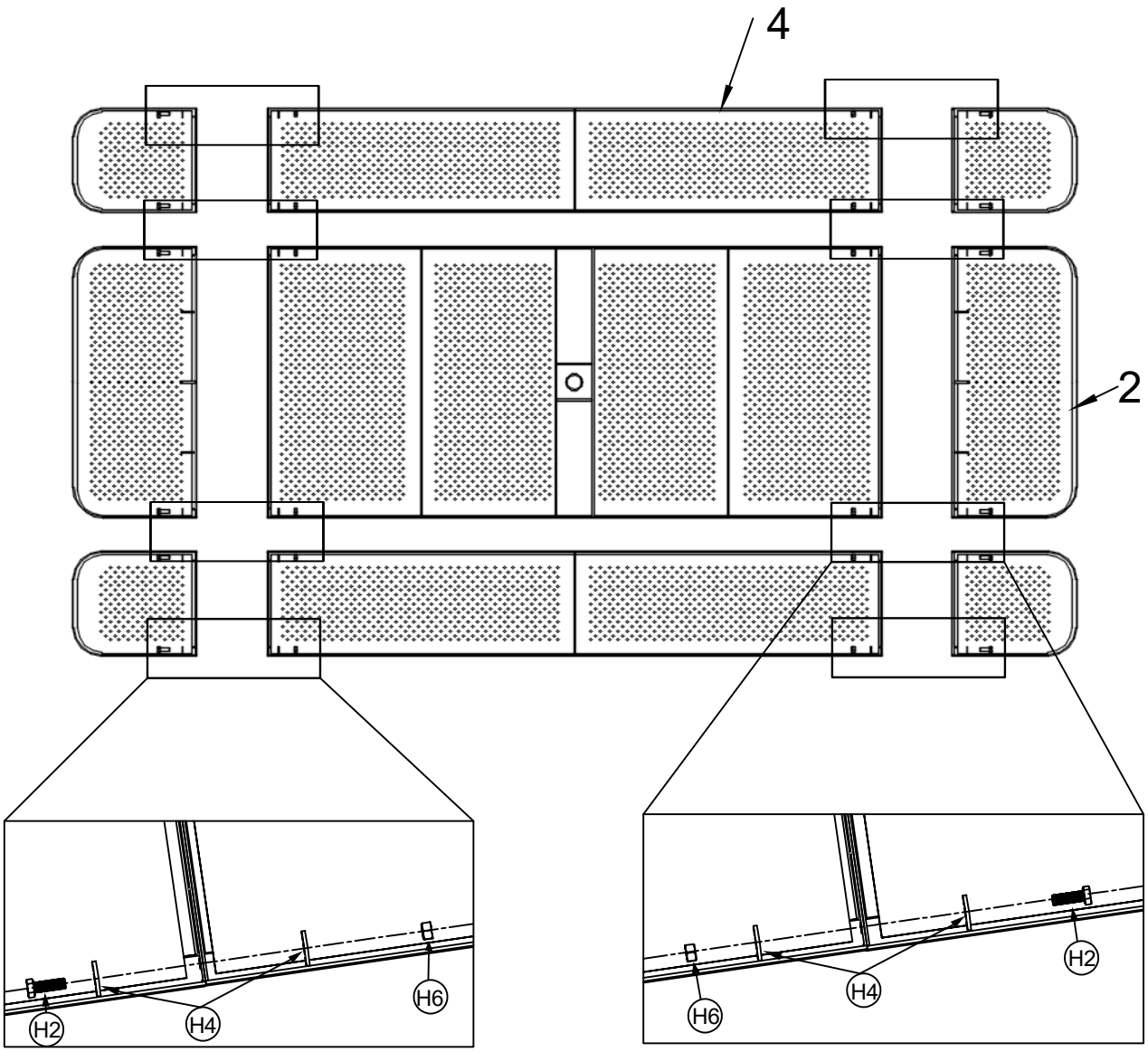

Step1

⚠WARNING ⚠

- Do not climb on, under or through tables and benches.
- Two people required to move tables and benches.
- Do not use if any parts of bench or table are broken or damaged.
- Inspect and tighten hardware every six months.
- Replace rusted hardware and damaged components.

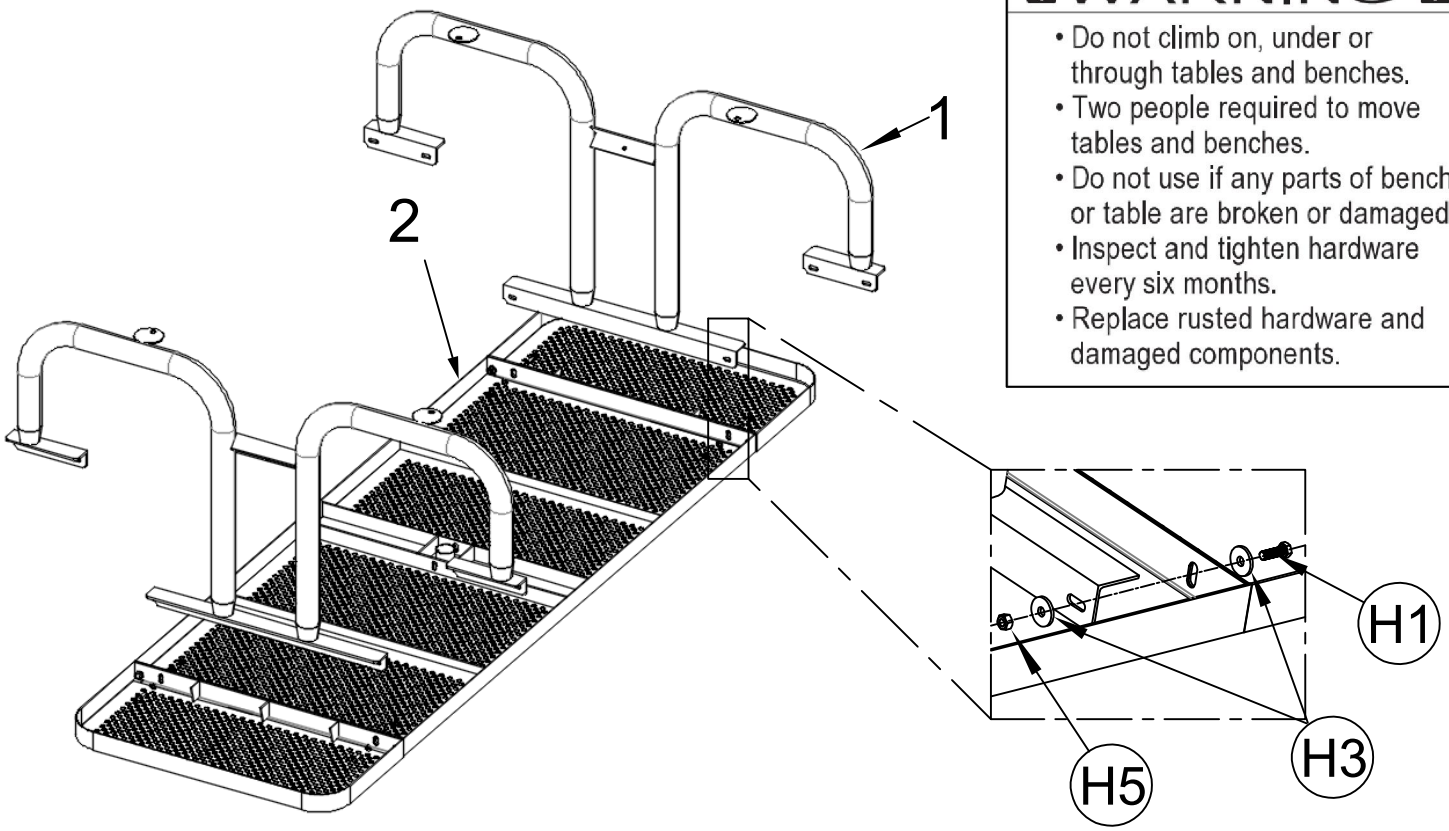

Step2

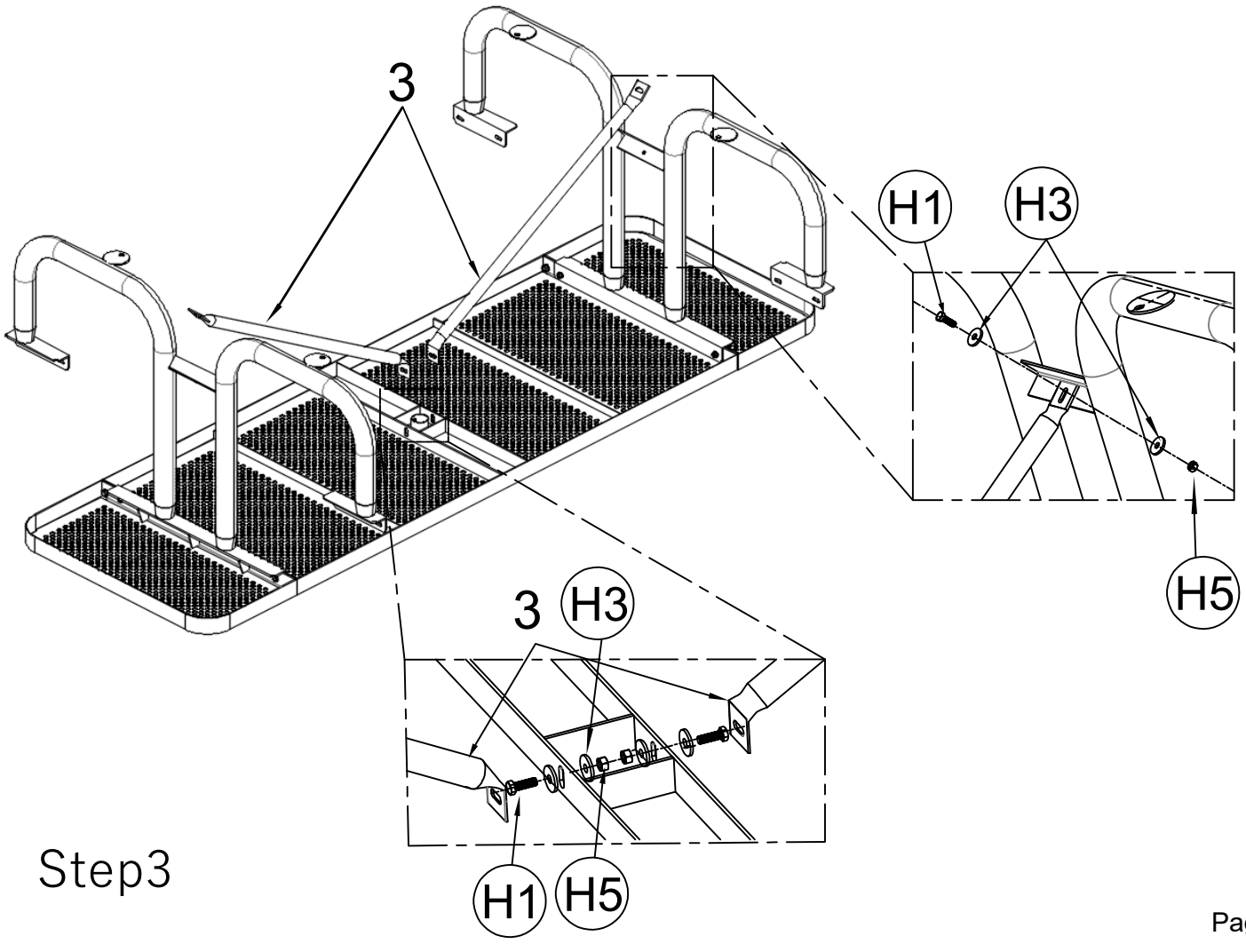

Step3

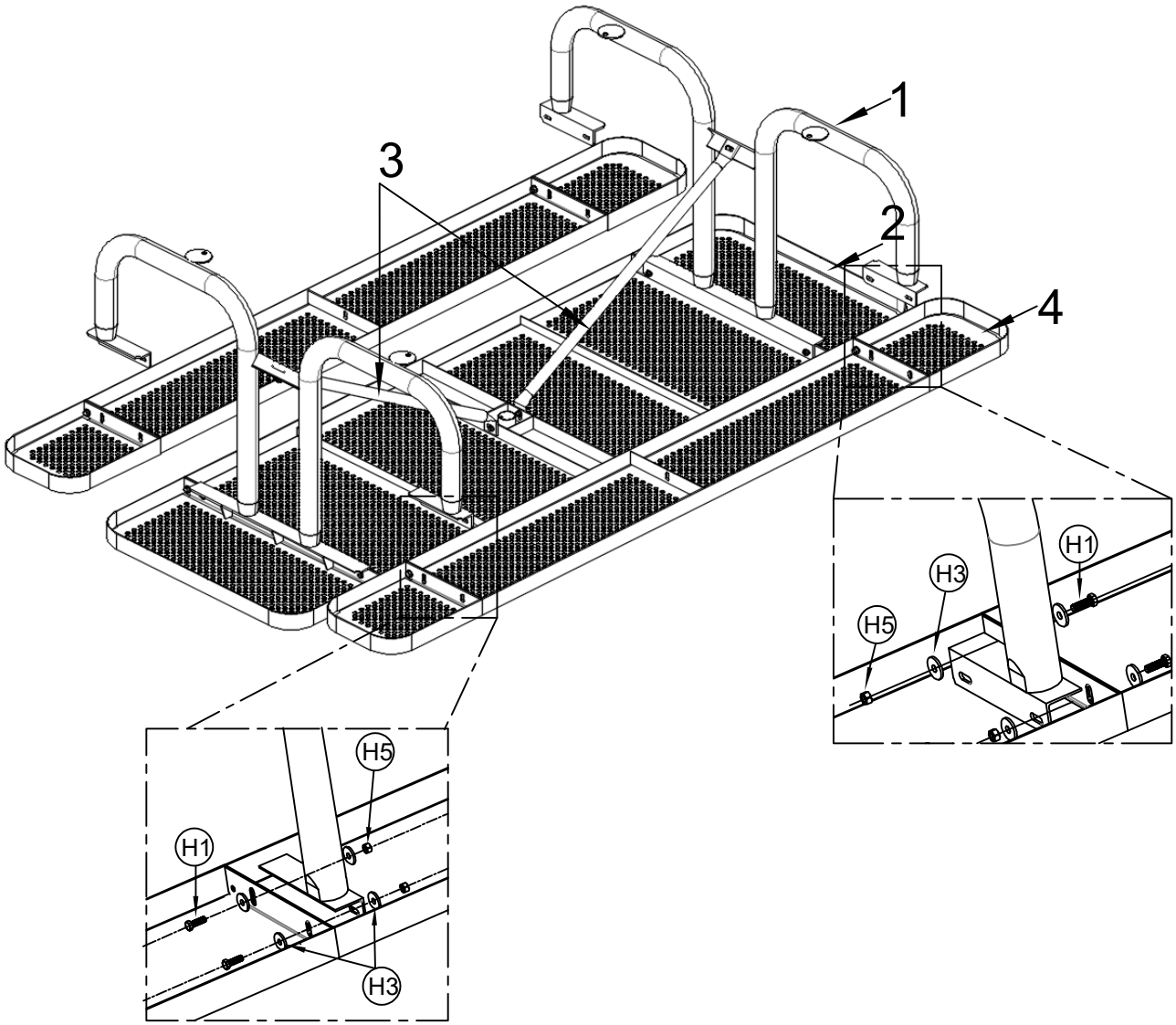

Step4

Table MUST be anchored to floorwith appropriate hardware.

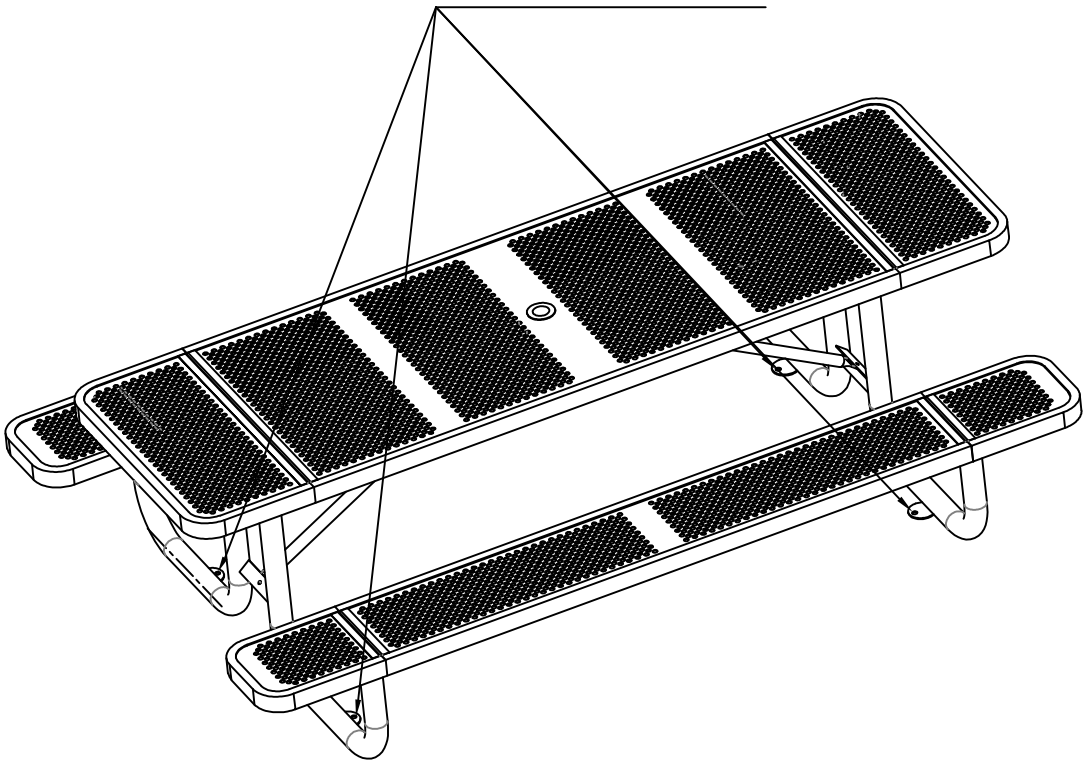

Step5