NEXEL INDUSTRIES

Assembly Instruction Manual

FS Workspace
Business • Education • Facility Supplies
FilingSupplies.com

FilingSupplies.com | 800-810-3453

NEXEL Wire Shelving Cart





Tools Required:
- Rubber mallet

PARTS LIST

Image (not to scale)	QTY	Description
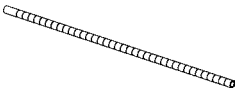	4	Post*
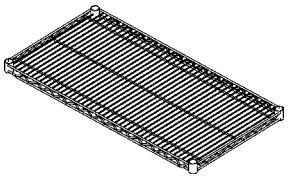	2-3	Shelf**
	4	Caster Guard + Swivel Caster
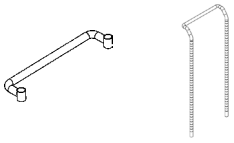	1	Handle + Hardware (if applicable)
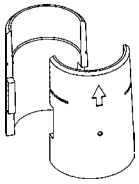	8-12 sets (4/shelf)	Shelf Clip

* If purchased NEXEL cart has a U-handle, posts are not included/required
**Purchased NEXEL component may look different than the one pictured here.

1 Attach Top Shelf to Posts

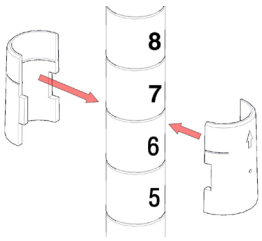

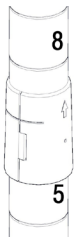

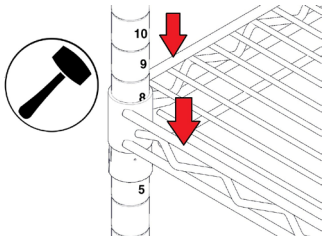

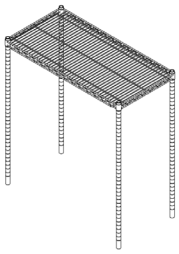

Snap a pair of post clips onto the post at the desired height for the top shelf. The ridge on the inside of the clips should fit into the grooves on the post. The arrow on the clip should be pointing upwards. Repeat for the other 3x posts, placing the clips at the same height using the numbers on the post as a guide.

NOTE: If the post does not have numbers, count the number of grooves above/below the clip to ensure all clips are at the same level.

Slide the posts through the holes on the shelf until the shelf slides over the clips. Use a mallet to gently tap the sides of the shelf around the post until the clip is firmly wedged in the shelf hole.

Repeat for the other 3x sides of the shelf until it is secured.

NEXEL Cart

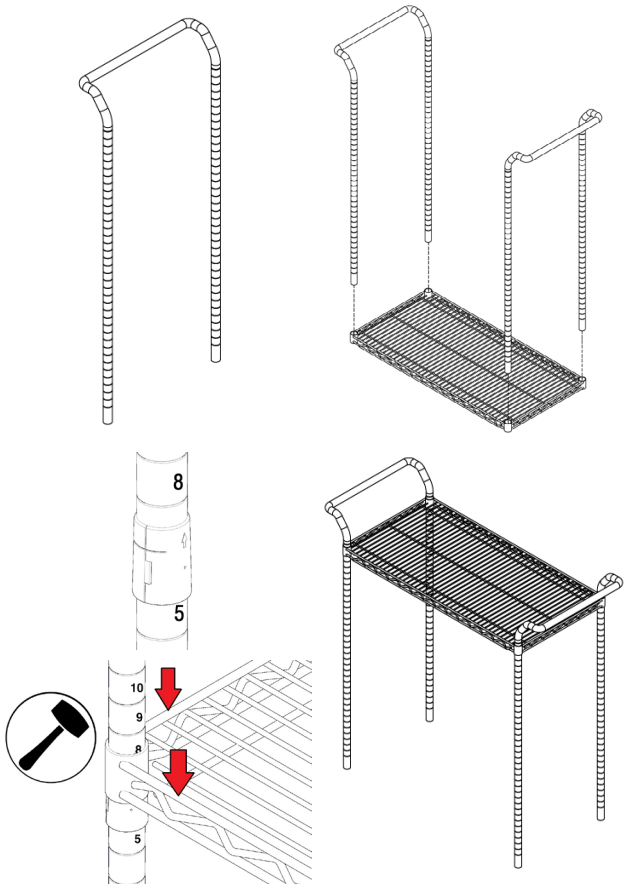

NOTE: If assembling a NEXEL utility cart, follow these steps:

Slide the 2x U-handles through the corner holes of the top shelf first.

Snap a pair of post clips onto the post at the desired height for the top shelf. **The post clips should be below the shelf.** The ridge on the inside of the clips should fit into the grooves on the post. The arrow on the clip should be pointing upwards. Repeat for the other 3x posts, placing the clips at the same height using the numbers on the post as a guide.

NOTE: If the post does not have numbers, count the number of grooves above/below the clip to ensure all clips are at the same level.

Slide the posts through the holes on the shelf until the shelf slides over the clips. Use a mallet to gently tap the sides of the shelf around the post until the clip is firmly wedged in the shelf hole.

2 Attach Handle (if applicable)

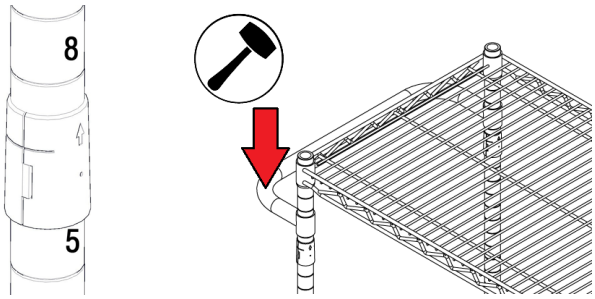

APPLICABLE ONLY FOR NEXEL PUSH CARTS:
NOTE: Skip this step if a Nexel shelf cart or Nexel utility cart was purchased.

Slide the push cart handle onto two of the posts. Snap a pair of post clips onto the post at the desired height for the handle. **The clips should be below the handle**. The ridge on the inside of the clips should fit into the grooves on the post. The arrow on the clip should be pointing upwards. Repeat for the other post.

Push the push cart handle downwards until it slides over the clips. Use a mallet to gently tap the sides of the shelf around the post until the clip is firmly wedged in the shelf hole.

NEXEL Cart

3 Attach Remaining Shelves

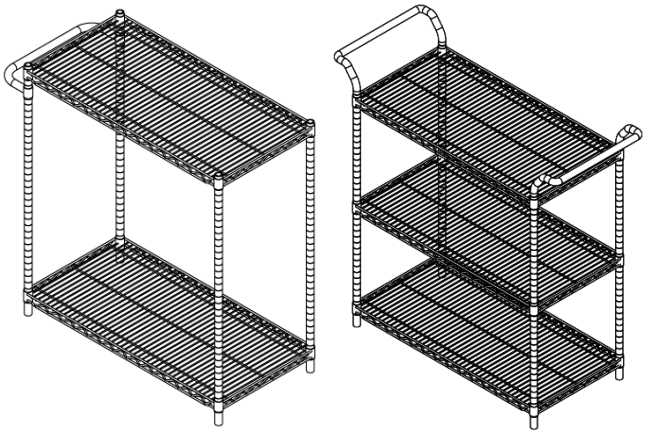

For each remaining shelf(s):

Slide the corner holes of the shelf onto the 4x posts. Position them above the desired shelf height.

Snap 4x pairs of post clips onto the posts at the desired shelf height. Use the numbers on the posts as an aid to ensure that the clips are at the same height. The shelf should be above the post clips.

NOTE: If the post does not have numbers, count the number of grooves above/below the clip to ensure all clips are at the same level.

Slide the shelf down onto the shelf clips. Use a mallet to gently tap all four sides of the shelf to fully secure it.

4 Attach Casters

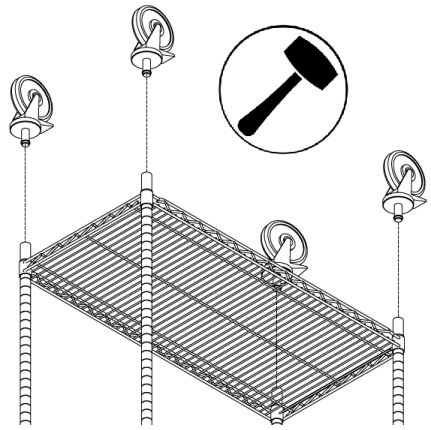

Flip the cart upside down.

Attach the 4x caster guards and 4x swivel casters to the bottoms of of the post. Use a mallet to tap the casters until they are firmly connected to the post.

Flip the cart back up.

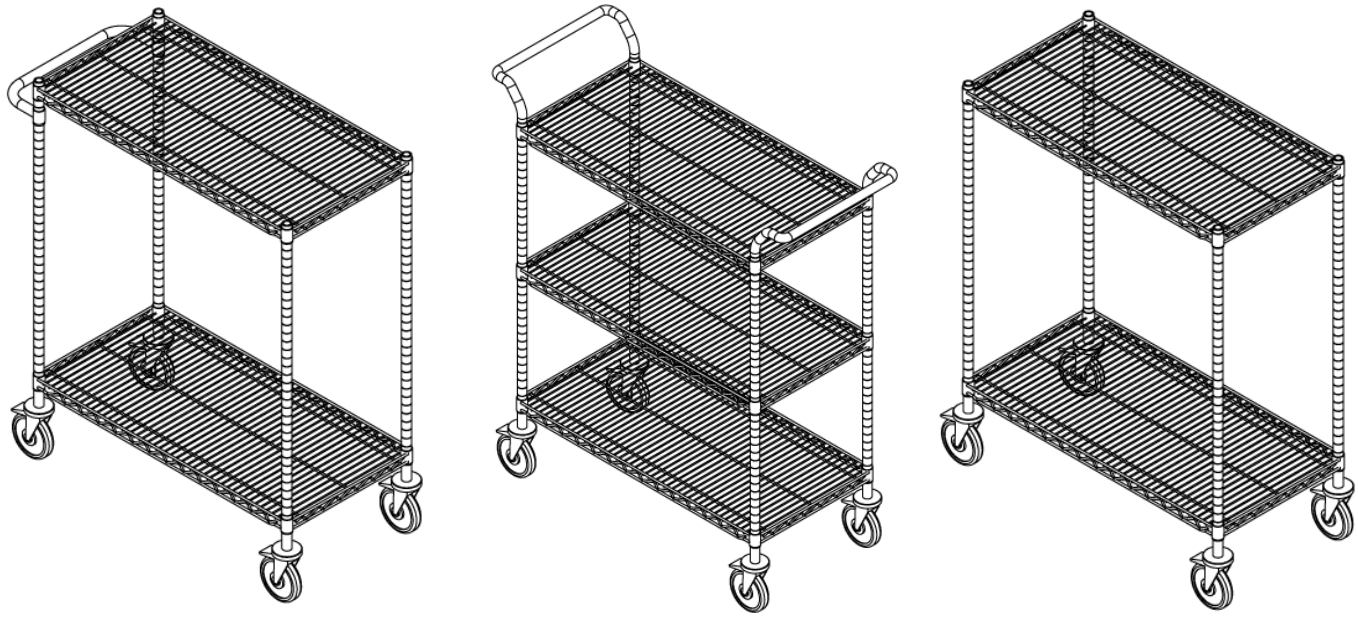

NEXEL Cart

OPTIONAL ACCESSORIES (sold separately)

Wire Shelf Dividers

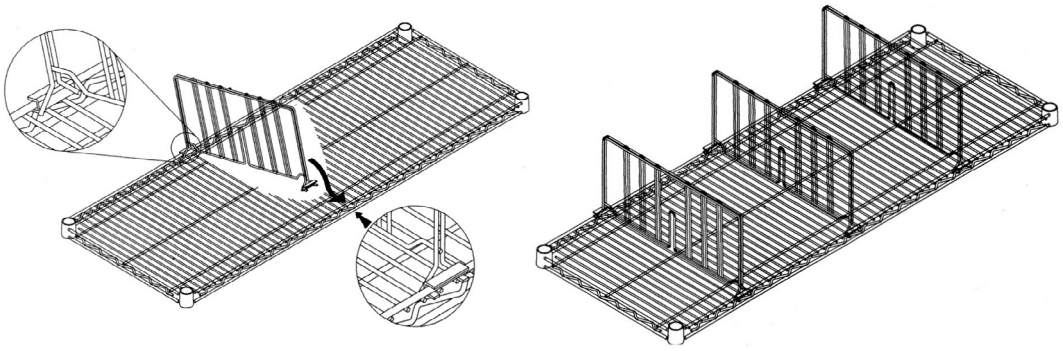

Position the wire shelf divider on top of the NEXEL wire shelf. Snap the clips at the bottom of the shelf divider onto the sides of the wire shelf.

Repeat for the remaining shelf dividers.

Shelf Ledge

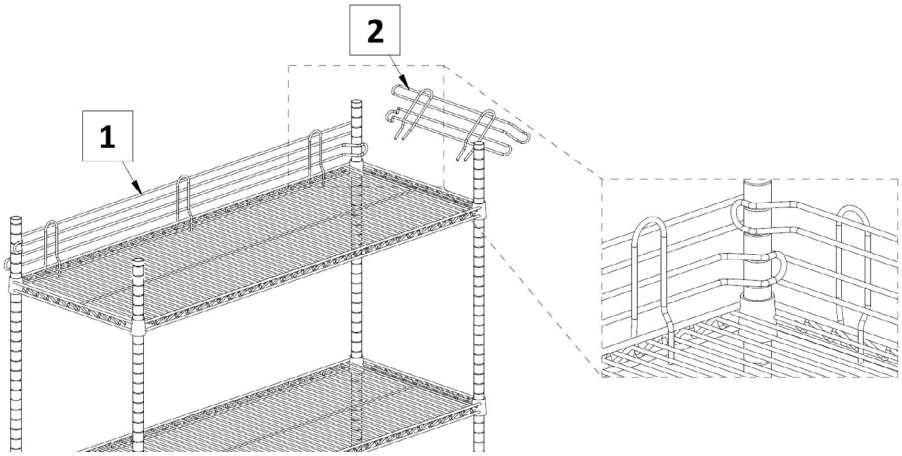

The long shelf ledge (1) should be installed before installing the short shelf ledge (2).

Take the shelf ledge and slide the prongs into the side of the wire shelf. The sides of the shelf ledge should should wrap around the post and the tension should keep the shelf ledge in an upright position.

Repeat for all shelf ledges.

Wire Utility Basket

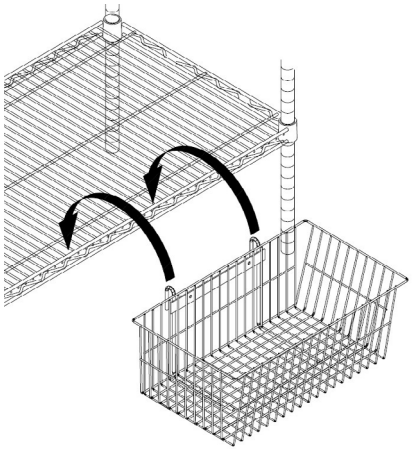

Slide the two prongs on the side of the wire utility basket into the side of the wire shelf.

Other NEXEL shelving accessories available for purchase:

- Document holder
- Label holders
- Shelf liners
- Bins
- Box slide
- Keyboard drawers
- Can rack
- Reel holder
- Hanging rail
- Drying racks
- ESD Safe Ground Conversion Kit