User's Manual

Continental Dynamics

Assembly Instructions | Instrucciones de Ensamblaje | Directives d'assemblage

FilingSupplies.com | 800-810-3453

Wall Mounted Misting Fan - Outdoor Rated - Oscillating

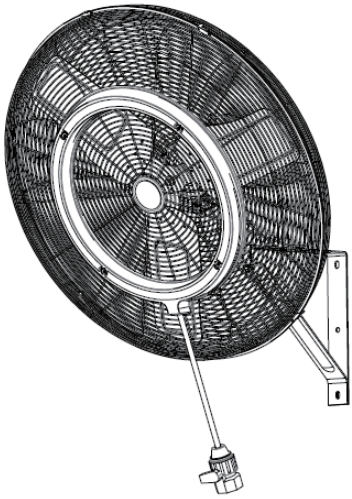

Model 293073 - 24" Wall Mounted Misting Fan - Outdoor Rated - Oscillating - 7435 CFM - 1/7 HP

Model 293074 - 30" Wall Mounted Misting Fan - Outdoor Rated - Oscillating - 7204 CFM - 1/7 HP

Read this manual thoroughly prior to installation, operation or maintenance. Keep these instructions in a safe location for future reference. For questions, call 800-810-3453 or visit FilingSupplies.com.

Read all instructions before use. To reduce the risk of fire, electric shock, or injury to persons when using this appliance, follow the following precautions.

- DO NOT use the fan when there is damage to the cable cord or plug. If the supply cord is damaged, it has to be replaced.
- Fit the guard onto the fan before starting up the fan.
- Plug into a grounded 3 prong outlet.
- DO NOT remove the ground prong.
- DO NOT use extension cords.
- DO NOT use the fan close to fires.
- DO NOT insert your hand or other objects into the grill or into moving parts.
- DO NOT use the fan with any solid-state speed control devices.
- Unplug the fan before moving it or performing maintenance.
- Do NOT touch the fan when your hands are wet.
- Unplug the fan when it is not in use.
- DO NOT unplug the fan by pulling the cable cord. Only pull the plug.
- DO NOT immerse the fan in water.

FS Workspace
Business • Education • Facility Supplies
FilingSupplies.com

Wall Mounted Misting Fan - Outdoor Rated - Oscillating

Table of Contents

Main Parts of Fan	2
ASSEMBLY INSTRUCTION	3
INSTALLING SECONDARY SAFETY SUPPORT CABLE	8
OPERATING INSTRUCTIONS	10

MAIN PARTS

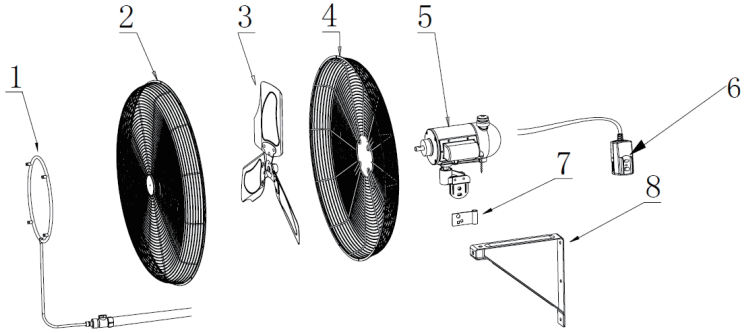

Fig. 1.

Part No.	Description	Quantity
1	Misting Device	1
2	Front Guard	1
3	Blade	1
4	Rear Guard	1
5	Motor	1
6	Power Cord with GFCI Plug	1
7	Swivel Bracket	1
8	Wall Bracket	1

Wall Mounted Misting Fan - Outdoor Rated - Oscillating

ASSEMBLY INSTRUCTION

1. Ensure the fan is NOT plugged into a power source and the fan is OFF. Mark the hole locations by using the brackets, then drill the holes.

   A. For concrete wall installation, after drilling, insert the wall anchors (1) and tap them flush with the wall. Position the bracket and then screw the bolts (2) into the anchors, securely attaching to the wall. See Fig. 2.

   B. For wall stud installation, after drilling the smaller diameter pilot hole, position the bracket and screw the bolts into the wall until they are secured.

CAUTION: The fan is only suitable for concrete wall. Do not use for dry wall mounting. Use the mounting accessories shipped with products for wall mounting.

WARNING: This fan is to be mounted with the wall bracket, it MUST be mounted and secured on a solid wall that is structurally sound to support the fan and mounting bracket. The wall bracket along with the fan MUST NOT be mounted on any surface that is subject to vibration, wobbling, movement or the like. The fan MUST be mounted and properly secured to a STATIONARY structure.

Step 1:

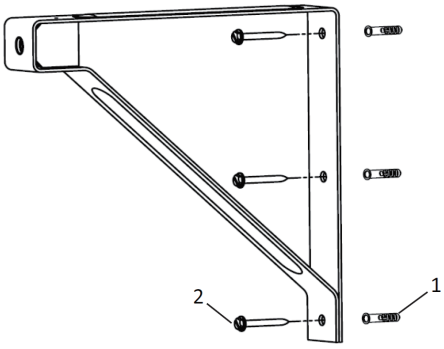

Concrete Wall Installation

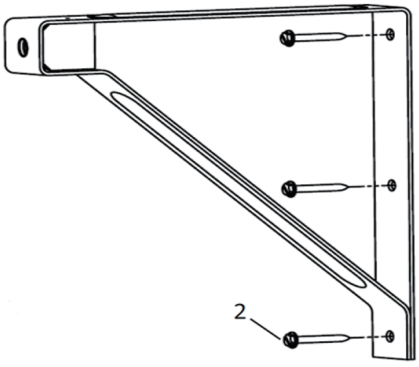

Wall Stud Installation

Fig. 2.

2. Remove four sets of hexagonal nuts, spring washers, and big washers from the motor. Save them for step 3.

Step 2:

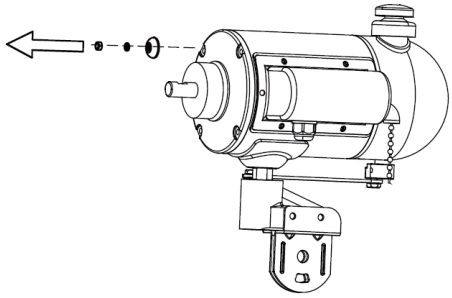

Fig. 3.

3. Attach the rear guard (4) to the screws found on the motor and then secure them together using four bowl washers (1), four spring washers (2), and four nuts (3) from step 2.

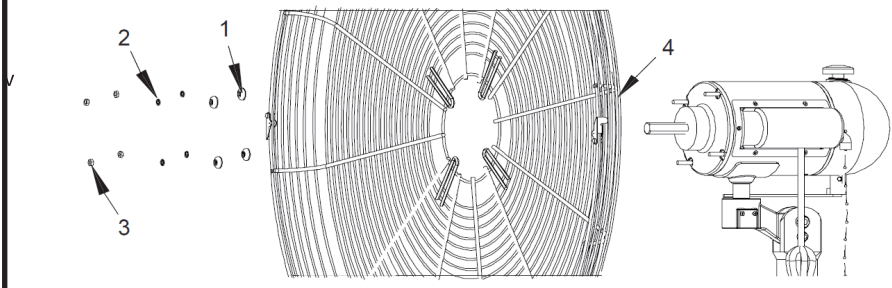

Fig. 4

4. Assemble fan blade (2) onto the motor shaft by tightening two screws (1) which are located on the fan blades. Make sure the screws are tightly secured.

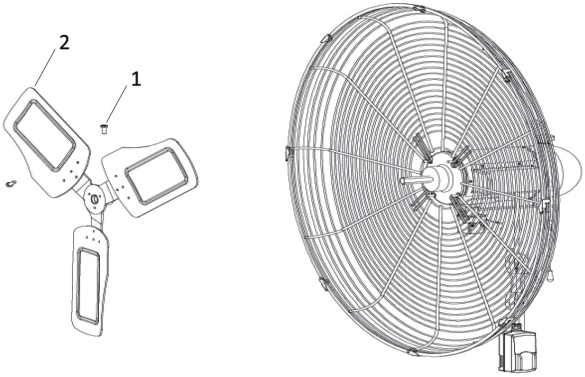

Fig. 5.

5. Position the front guard such that the small hole aligns with the small hole on the bottom edge of the rear guard. Assemble the front guard (1) to the rear guard (2) by attaching both guards together with clips.

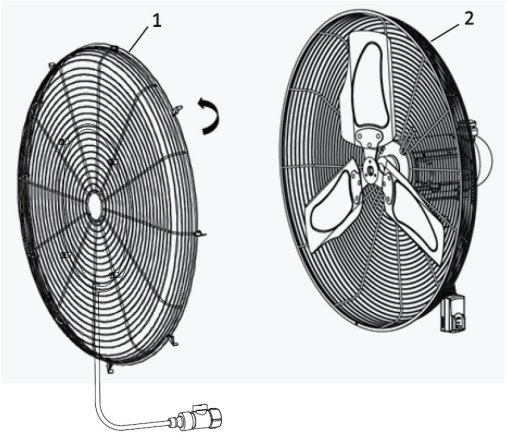

Fig. 6.

6. Secure the assembly on the front guard and rear guard by tightening the screw (1) and nut (2) on the bottom edge of each guard.

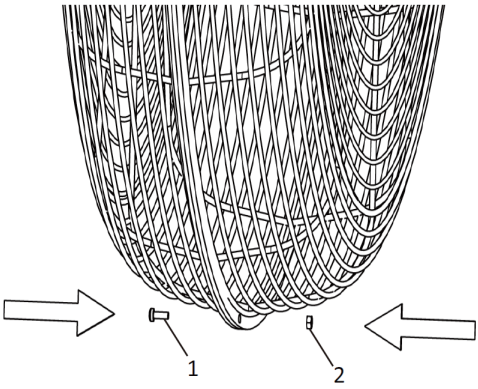

Fig. 7.

7. Insert the swivel bracket (6) into motor frame bracket and fasten it with bolt (1), flat washer (2), spring washer (3) and nut (4). Fasten the bolt (5) with the knob (7) for adjusting the tilt angle of the fan or fix the tilt angle of the fan.

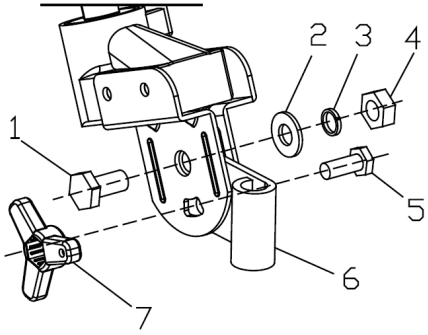

Fig. 8.

8. Insert the screw (1) through the upper bracket. Connect the lower bracket to the upper bracket with a screw (1). Fasten the two brackets with a spring washer (2) and hexagon nut (3).

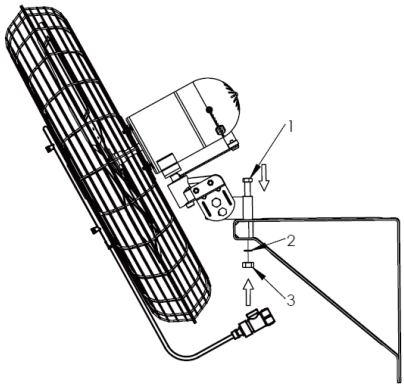

Fig. 9.

9. Loosen the washer nut (1) and adjust until the fan head is at the desired angle. Tighten the washer nut (1).

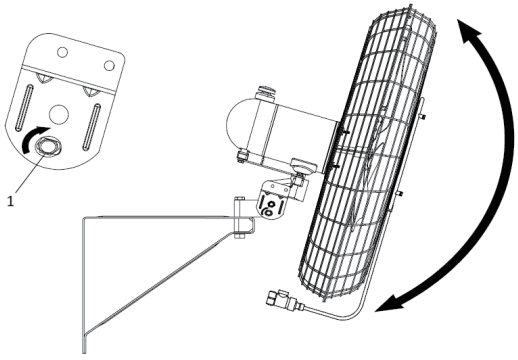

Fig. 10.

10. Connect the misting switch (1) to the water pipe (2) and tighten it. Turn the switch until it is parallel to the water pipe to open the misting function. Turn the switch until it is perpendicular to the water pipe to close the misting function.

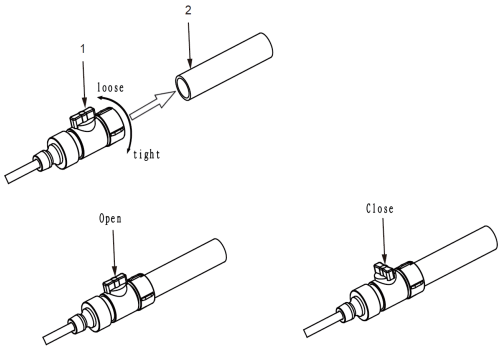

Fig. 11.

INSTALLING SECONDARY SAFETY SUPPORT CABLE

WARNING: Use of secondary safety support cable does not guarantee protection against injury. Mounting of both the circulator and cable could fail if subject to abuse, neglect or if improperly installed. To avoid personal injury, circulators must be supported anytime the angle of the fan is adjusted.



PARTS	SPECIFICATION	QTY
	Φ3*3050	1
	M5*13	2
	ST8*50	1
	Φ8*Φ24*δ2	1
	Φ10*60	1

CAUTION: The fan is only suitable for concrete wall. Do not use for dry wall mounting. Use the mounting accessories shipped with the product for wall mounting.

1. Ensure the fan is NOT plugged into a power source and the fan is OFF. Loop one end of the cable around the large diameter wires of both the front and rear

guard as shown below. Attach a cable retainer with the "U" on the tail side of the loop leaving a tail of approximately 1 to 2 inches. Tighten clamp nuts forming a tight loop with 32 in. lbs. of torque. Make sure the cable does not interfere with the propeller.

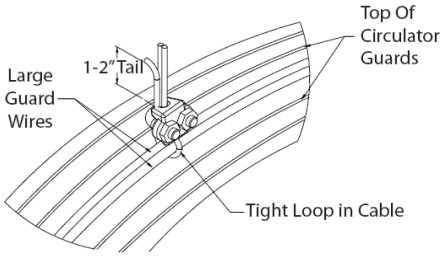

2. Drill a hole in concrete wall, insert the wall anchor and tap it flush with the wall.

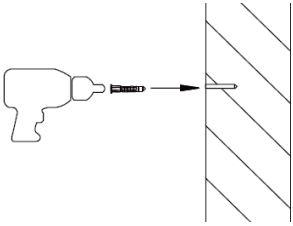

3. Fasten a blot and a washer through the terminal of the secondary safety support cable and into the anchor for security.

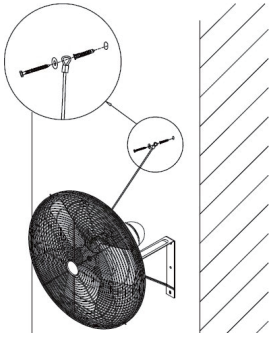

Fig. 14.

4. Check the assembly to assure the propeller is free of all obstructions and turns freely.
5. Connect the circulator to the proper power supply ensuring that it conforms to the electrical rating listed on the circulator's motor nameplate.

OPERATING INSTRUCTIONS

1. Test GFCI (Ground Fault Circuit Interrupter) plug BEFORE EACH USE.

- Plug GFCI into power outlet.
- Press RESET button (b). Indicator (a) should turn red.
- Press TEST button (c). Indicator (a) should turn off. GFCI plug is tripped.
- Press RESET button (b) again for use.
- DO NOT USE FAN IF THE ABOVE TEST FAILS.

2. ADJUSTING FAN SPEED

The fan has three speeds (LOW, MEDIUM and HIGH). Pull the chain (e) of the unit to adjust air flow to the desired speed.

3. USING THE OSCILLATING FEATURE

Pressing the oscillation knob (d) will allow the fan head to be turned. Pulling up on the oscillation knob (d) will lock the fan head at the desired position.

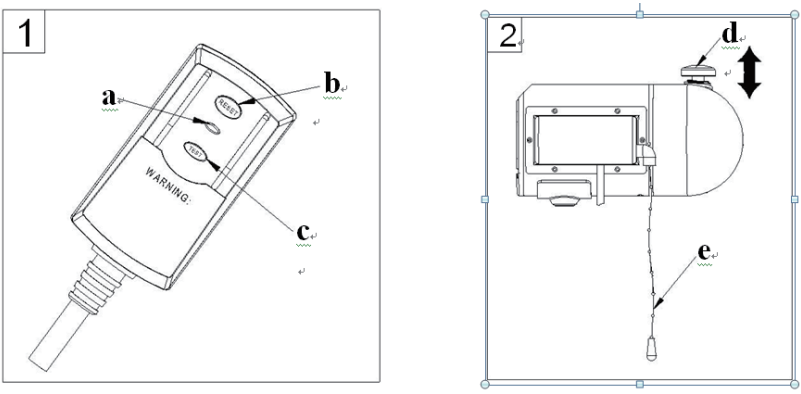

Fig. 15.

CARE AND MAINTENANCE

Unplug the appliance before cleaning. Don't use any water for cleaning metal surfaces. Use a dust cloth or wipe to clean off the surfaces of the fan. Use a vacuum cleaner to remove dust from the grill or remove the front grill by removing the securing screws on the edge of the grill. After cleaning, remount the grill and fasten the screws on the edge of the grill.

MISTING NOZZLE MAINTENANCE

- If the misting nozzles become clogged, remove them from the grill and wash them by water. Use a non-metallic brush to scrub them. Never clean the nozzles with pins or other sharp objects.

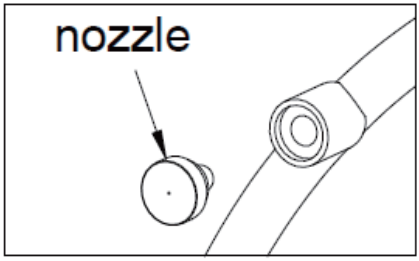

Fig. 16.

MISTING HOSE VALVE MAINTENANCE

- If the misting hose valve becomes clogged, unscrew it from the garden hose and flush it with running water to remove obstacles and debris.

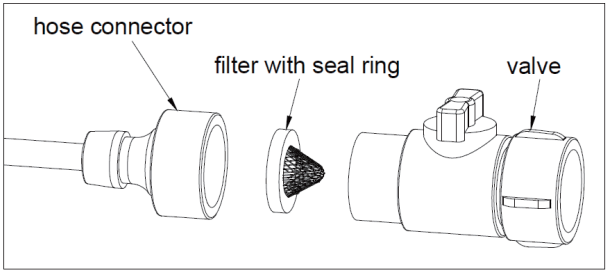

Fig. 17.