GLOBAL INDUSTRIAL™

*We can supply that.®*

| User Manual | Manual de Usuario | Manuel de l'Utilisateur |
|---|---|---|
| Customer Service<br>US: 1-800-645-2986 | Servicio de atención al Cliente<br>US: 1-800-645-2986 | Service à la clientèle<br>Canada: 888-645-2986 |

# In Wall Mechanical Fountain, Non-Refrigerated, Stainless

**Model**: 270317, 270317F

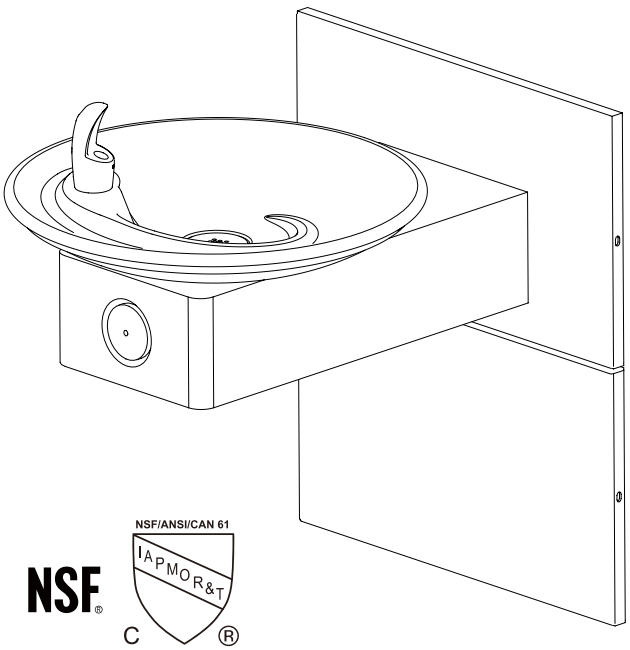

NSF/ANSI/CAN 61

NSF® IAPMO R&T C ®

Tested and certified to NSF/ANSI Standard 372/61

ASME A112.18.1/CSA B125.1
ASME A112.18.2/CSA B125.2
ASME A 112.19.3/CSA B45.4

## WARNING

- All installation work must be performed by authorized service personnel.
- Two or more people are recommended to lift and install the unit.
- Check local codes for plumbing requirements prior to installation.
- Refer to Rough-In Guide (page 4) prior to installation.
- Thoroughly flush all water supply lines of all foreign matter before connecting to the fixture.
- Check for any leaks before use.

- DO NOT attempt to repair or replace any part of this bottle filler unless it is specifically recommended in this manual. All other services should be referred to a qualified technician.
- For use with clean, clear potable drinking water only.
- Shut-off water supply during installation to reduce the risk of water damage.
- Freezing Caution: Before freezing temperatures occur, refer to the Draining and Winterization section of this manual (page 12) for proper preparation.
- Installation of a trap on the water drain line may be necessary; remove trap before winterization draining.
- Failure to follow safety warnings and/or installation instructions will void warranty.

---

**NOTE:** Included are the necessary vandal-resistant stainless steel bolts and washers needed to anchor this unit to the wall. Installer must provide a 1” PVC drain line (if applicable) and water supply line. All connections are made inside the item through the access door, as shown in the drawings. It is recommended to install a shut-off valve (not included) on the water supply.

# In Wall Mechanical Fountain, Non-Refrigerated, Stainless

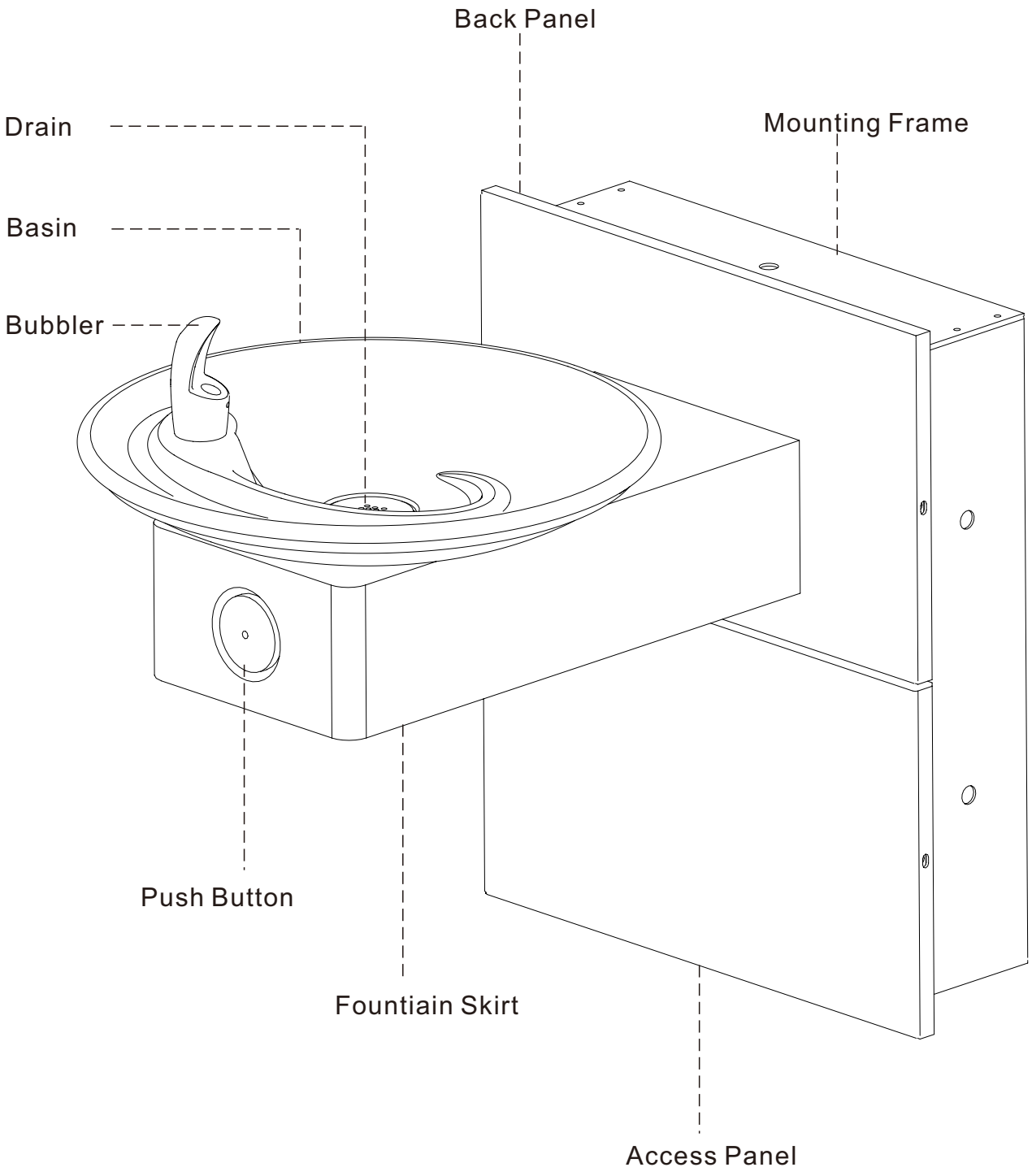

# In Wall Mechanical Fountain, Non-Refrigerated, Stainless

## SPECIFICATIONS

| | |
|---|---|
| Features: | 304 Stainless, Vandal-resistant bubbler |
| Finish: | SS Finish |
| Power: | No Electrical Required |
| Bubbler | Vandal Resistant |
| Activation Type: | Push Button |
| Mounting Type: | Wall Mount |
| Product Dimensions: | 15''L x 19''W x 20-5/8''H |
| Weight: | 33 lbs. |
| Installation Location: | Indoor |
| No. of Stations: | 1 |

## PART BREAKDOWN

| Ref. | Qty. | Description | |
|---|---|---|---|
| P1 | 1 | Bubbler |  |
| P2 | 1 | Push Button |  |
| P3 | 1 | Drain |  |
| P4 | 1 | Straight Flow Check Valve |  |
| P5 | 1 | Inlet Adapter |  |
| P6 | 2 | Union L-Connector |  |
| P7 | 2 | 1/4"O.D.Water Inlet (1)10'',(1)27.5" |  |
| P8 | 2 | 3/8"O.D.Water Inlet (1)8.6'',(1)21.6" |  |

| Ref. | Qty. | Description | |
|---|---|---|---|
| P9 | 1 | Elbow Drain Connector |  |
| P10 | 1 | Drain Tubing (1)11.4'' |  |
| H1 | 6 | SS Self Tapping Screw M8x80mm |  |
| H2 | 4 | SS Hexagon Socket Screw M10x25mm |  |
| H3 | 4 | SS Hexagon Socket Screw M8x10mm |  |
| H4 | 6 | SS Flat Head Torx Screw M6x10mm |  |
| H5 | 4 | SS Botton Head Torx Screw M4x16mm |  |
| H6 | 1 | M4 Torx Key Wrench |  |
| H7 | 1 | M6 Torx Key Wrench |  |

## REQUIRED TOOLS

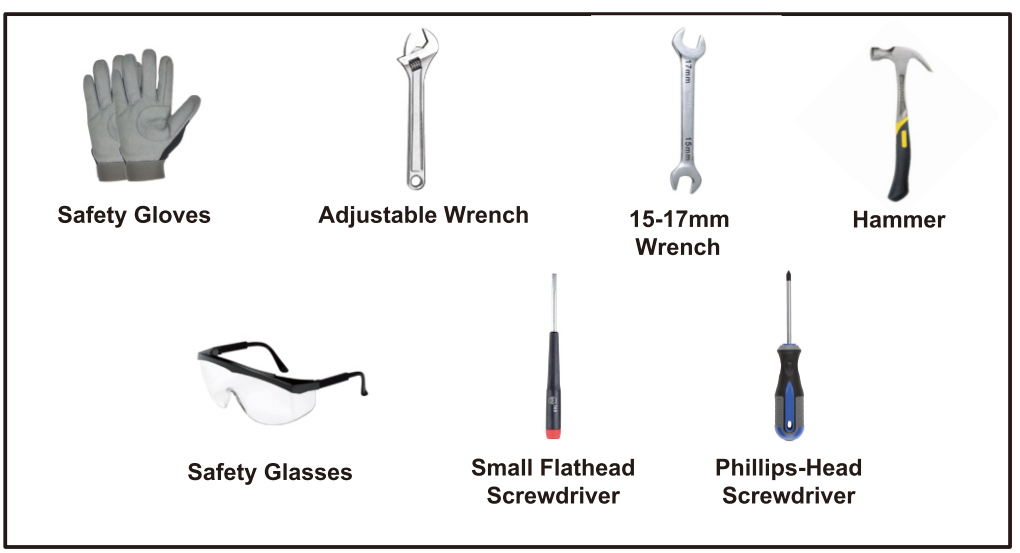

# Rough-In Guide

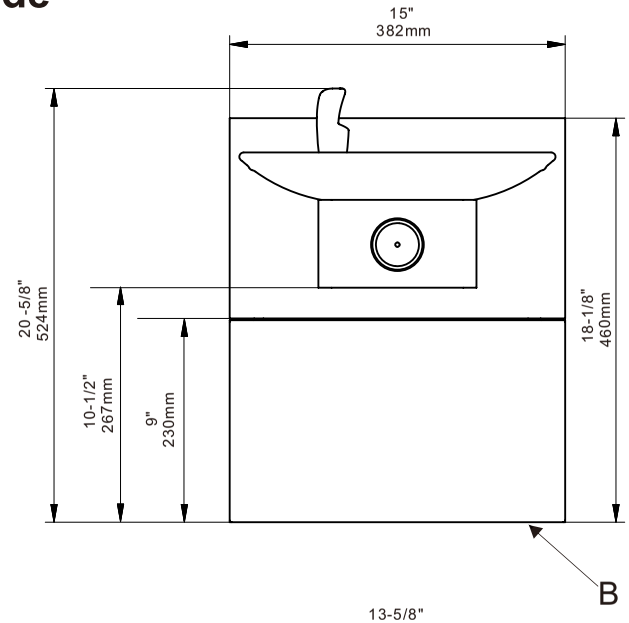


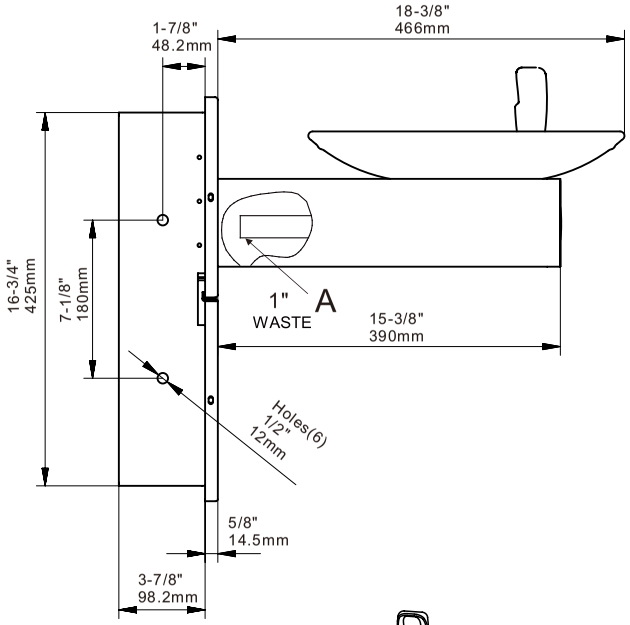


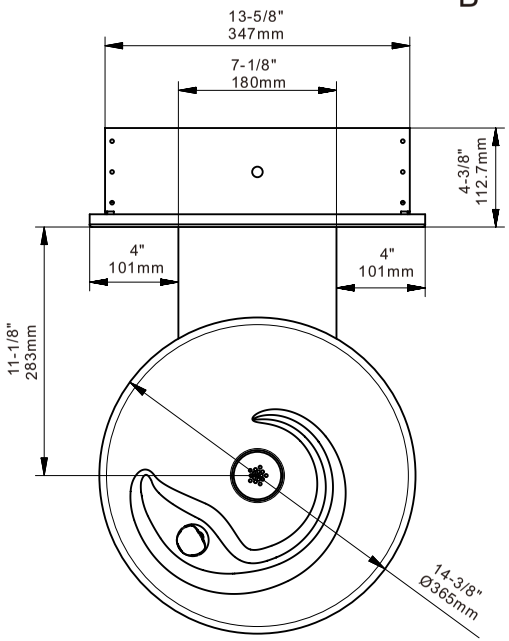


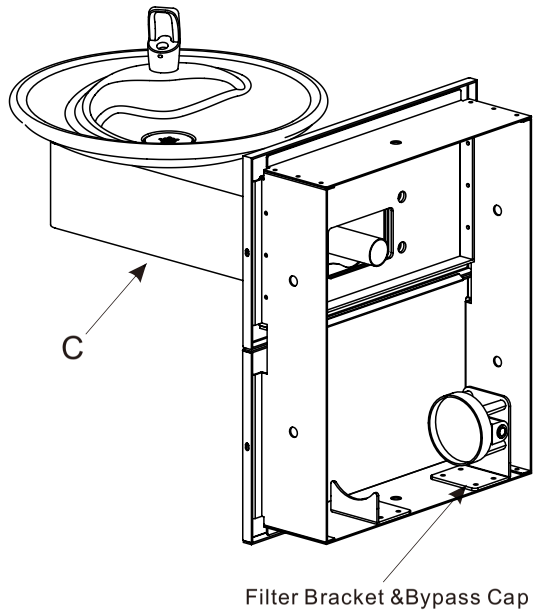


**LEGEND:**

**A=1"DRAIN TUBING**
**B=ACCESS PANEL(15" X 9-3/8")**
**C=REMOVABLE BOTTOM COVER**

• See Page 12 for Draining and Winterization
• Actual product configuration may vary based on model ordered.

## INSTALLATION

- It is recommended that 2 or more people install this unit.
- Locate and install plumbing through wall as required. Refer to Rough-In Guide (page 4) for proper location and correct plumbing.
- Install a drainable shut-off valve (not included) if in a freezable environment.
- Installation of a trap on the water drain line may be necessary; check local plumbing codes.

**WARNING:** The bottle filler is rated for inlet water pressure of 20-105 PSI. A pressure reducing regulator should be used if the inlet water supply exceeds 105 PSI. Any damage caused by reason of connecting this product to supply line pressure higher than 105 PSI will void warranty.

### 1. REMOVE ACCESS PANEL

Use M4 Torx Key Wrench (H6) to remove two SS button head torx screws (H5) from the access panel and then remove the access panel.

H5 x2 H6 x1

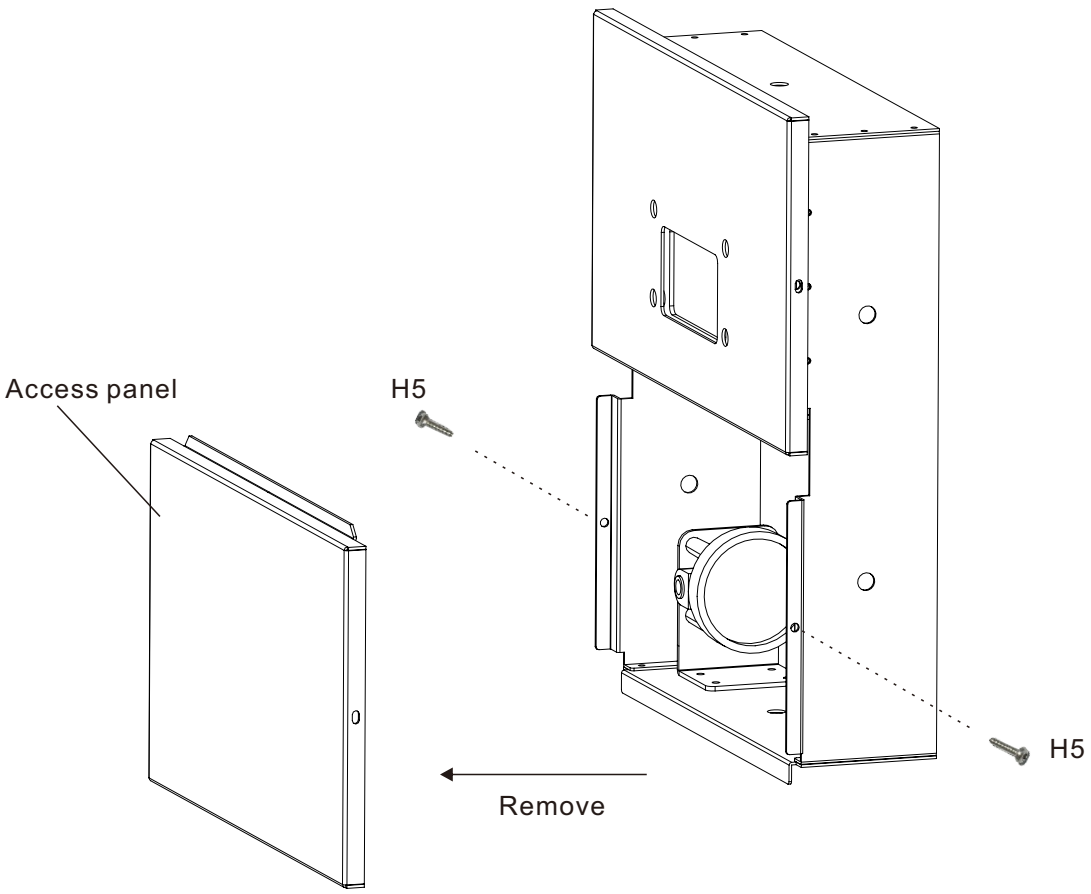

## 2.MOUNTING FRAME TO WALL

Locate and install plumbing through the wall as required. Refer to Rough-In Guide (page 4) for proper location and correct plumbing.

Use six SS Self Tapping Screws (H1) to secure the mounting frame in the wall.

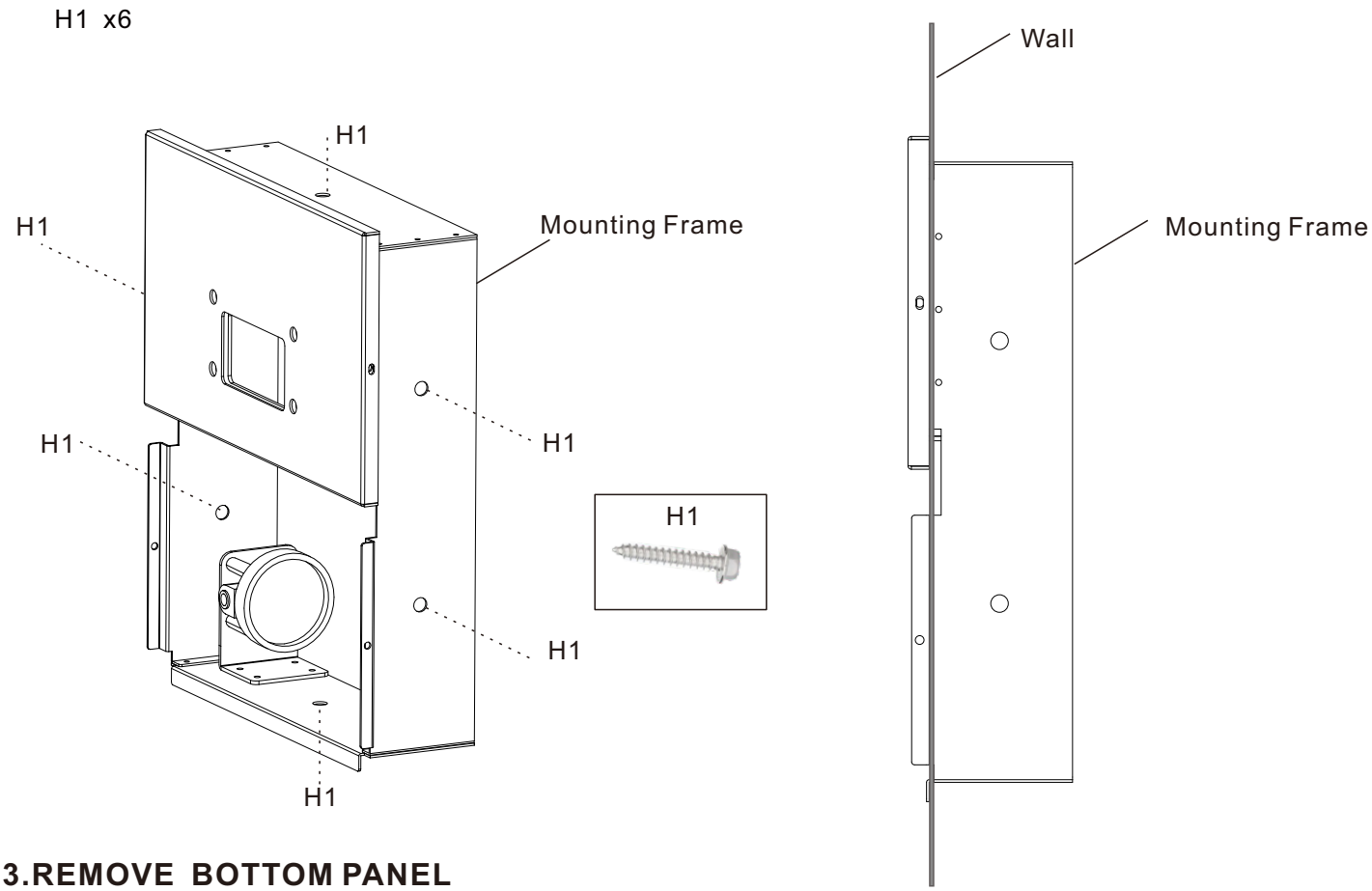


## 3.REMOVE BOTTOM PANEL

Use M6 Torx Key Wrench (H7) to remove six SS flat head torx screw (H4) from the fountain skirt and then remove the bottom panel form the fountain skirt.

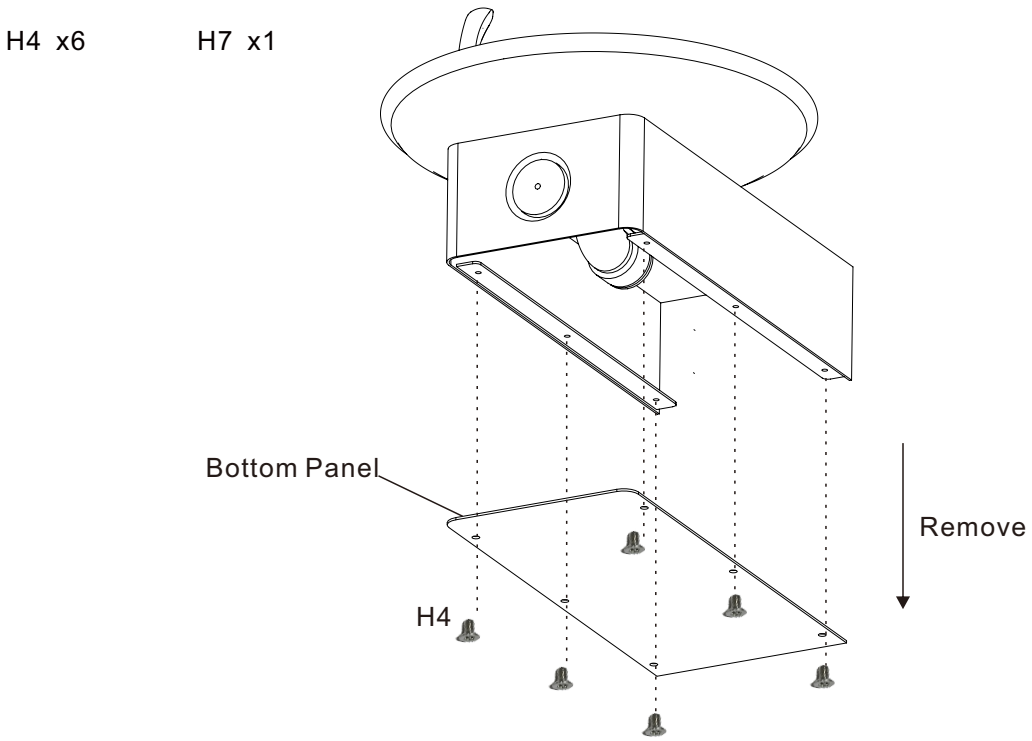

## 4.MOUNTING THE FOUNTAIN SKIRT TO FRAME

Use four M10 SS hexagon socket screws(H2) to connect the fountain skirt and mounting frame.

H2 x4

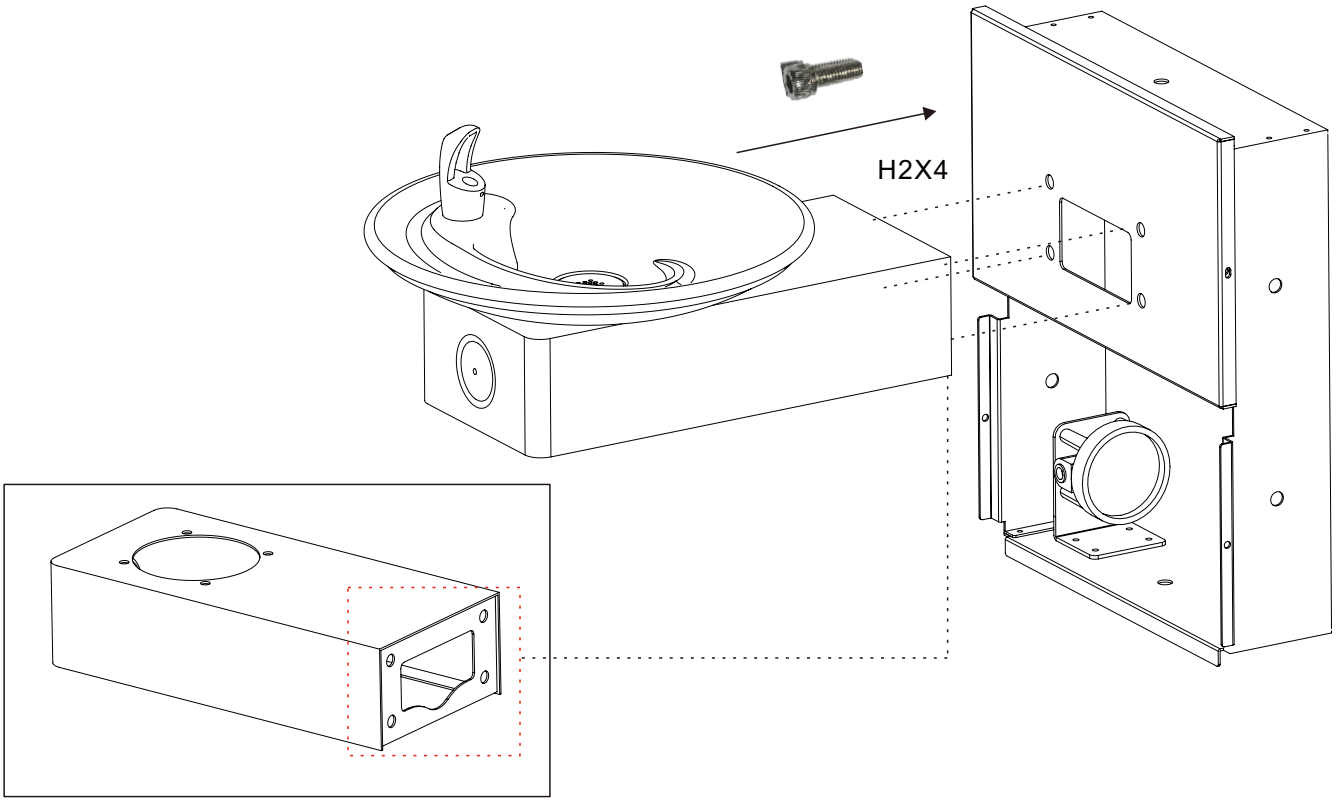


## 5.INSTALL THE DRAIN TUBING(P10) TO CONNECT THE P9.

P10 x1

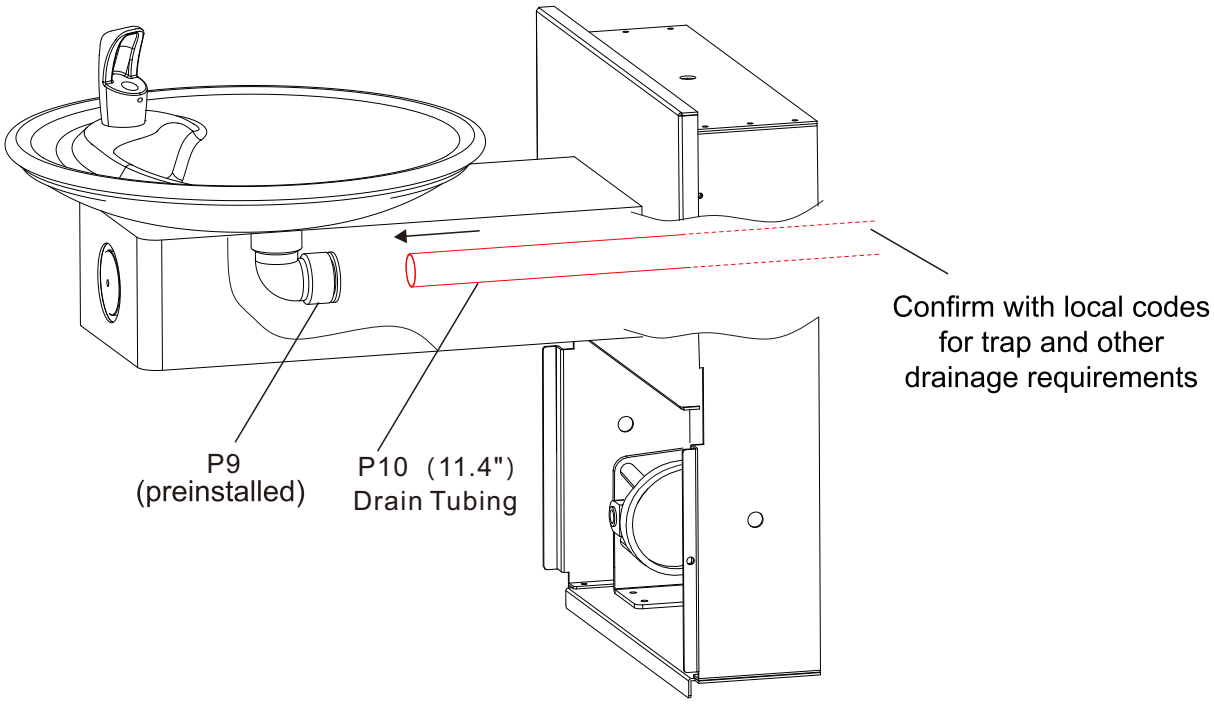

**6.**If you want to use water filter (not include), connect the p4, two 3/8"O.D.inlet pipe (P8), two union L-connector(P6) .

- Install a shut-off valve (not included) on the water supply.
- All other internal water lines are preinstalled; see below illustration for reference.
- All water connections and drains must comply with local codes.

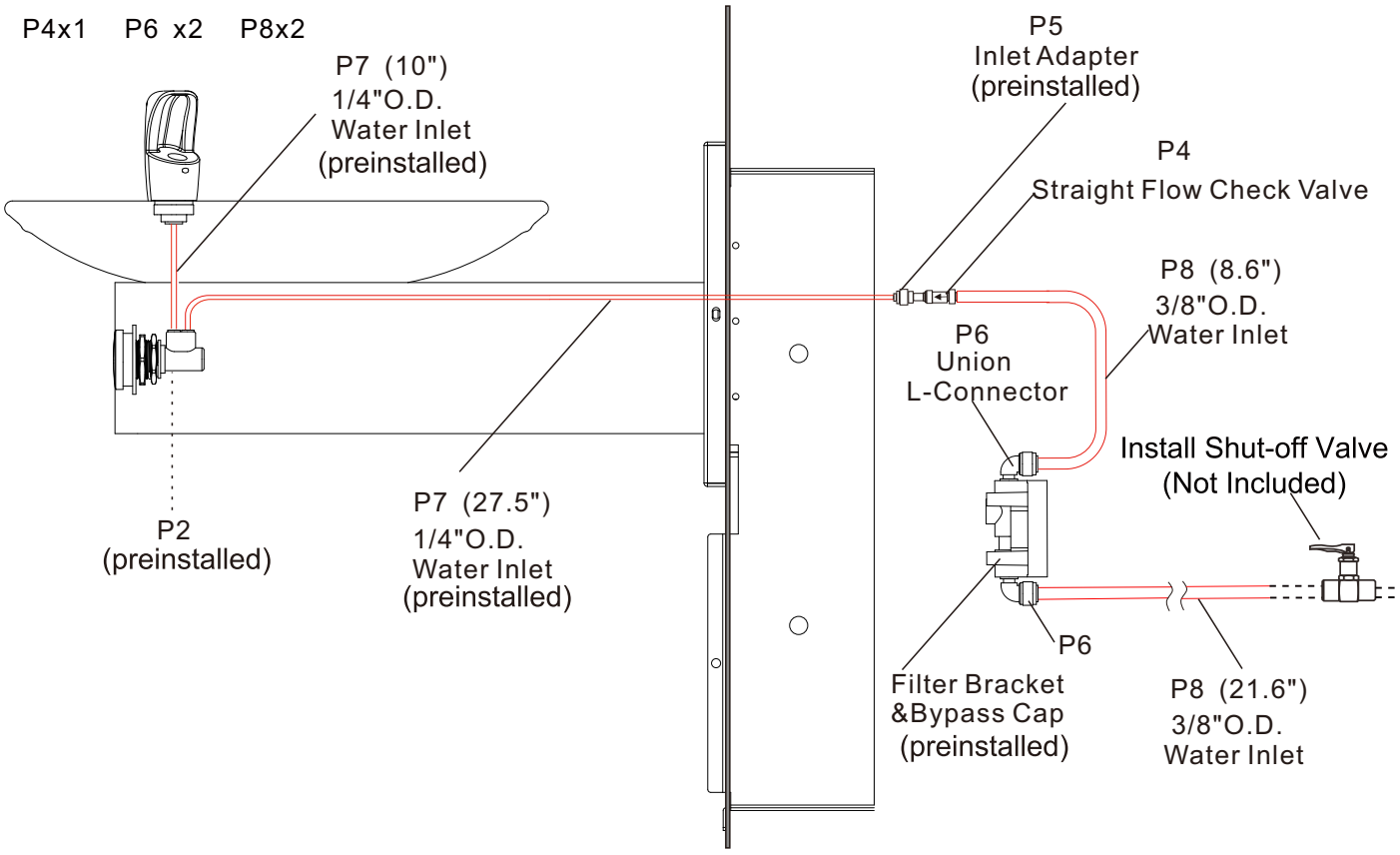


If you do not want to use water filter,connect the P4 and 21.6" P8.

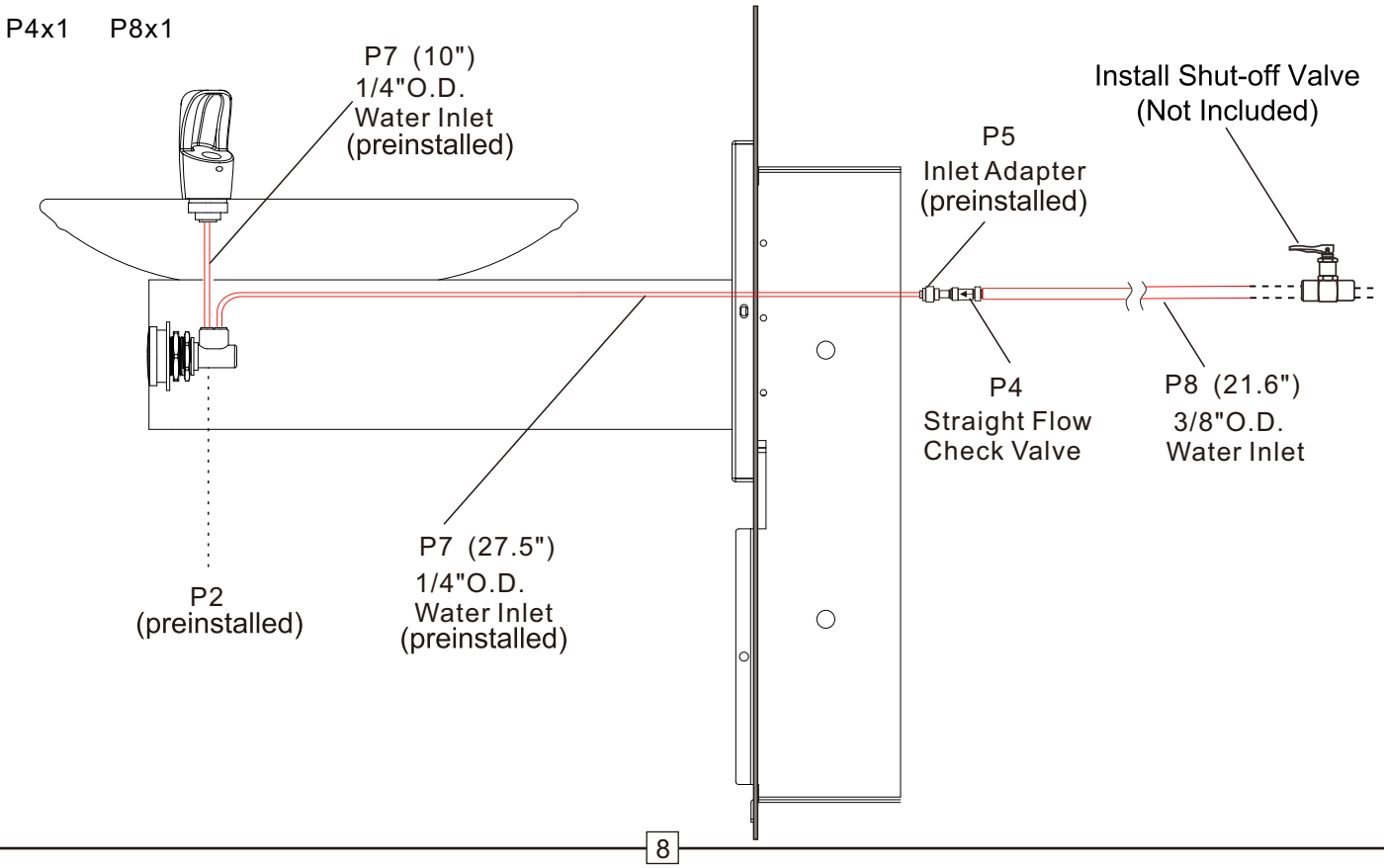

## 7.INSTALL THE PANELS

Install the H4 and the bottom panel, Install the H5 and access panel.

H4 x6 H5 x2

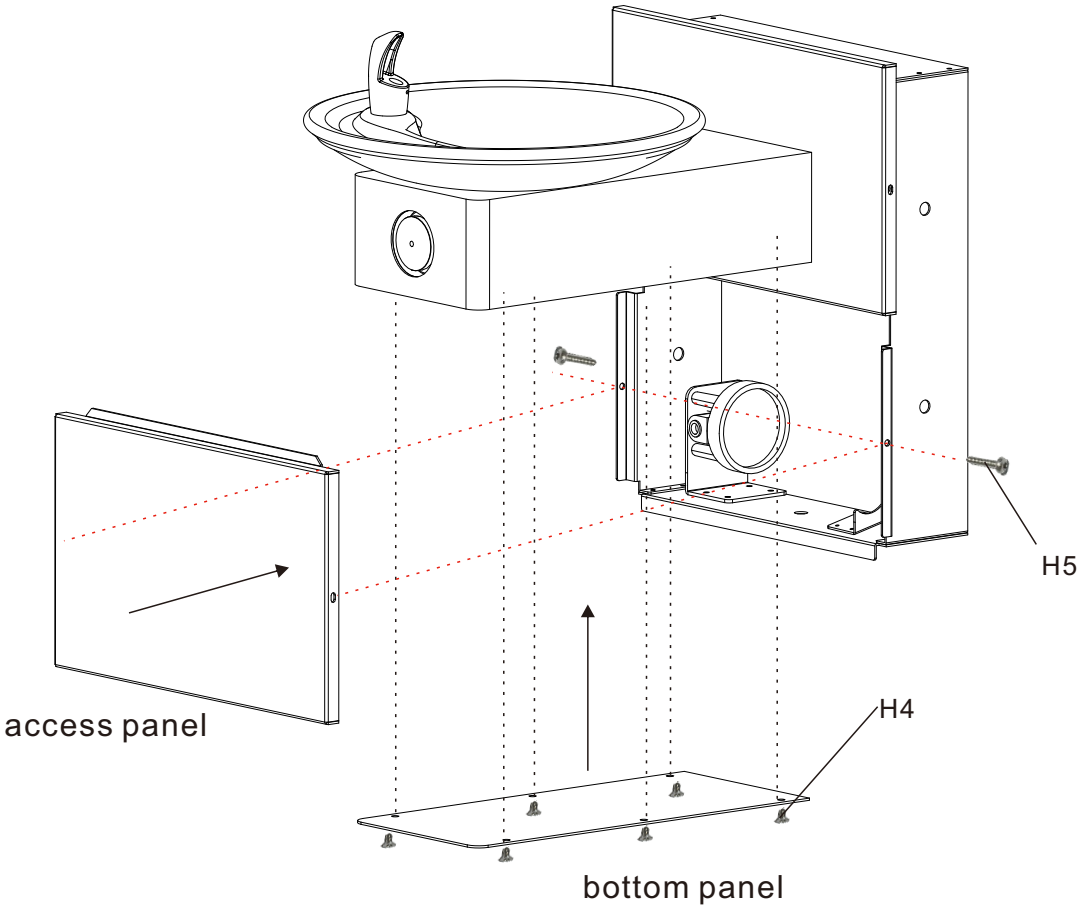

## WATER INLET LINE CONNECTION BREAKDOWN:

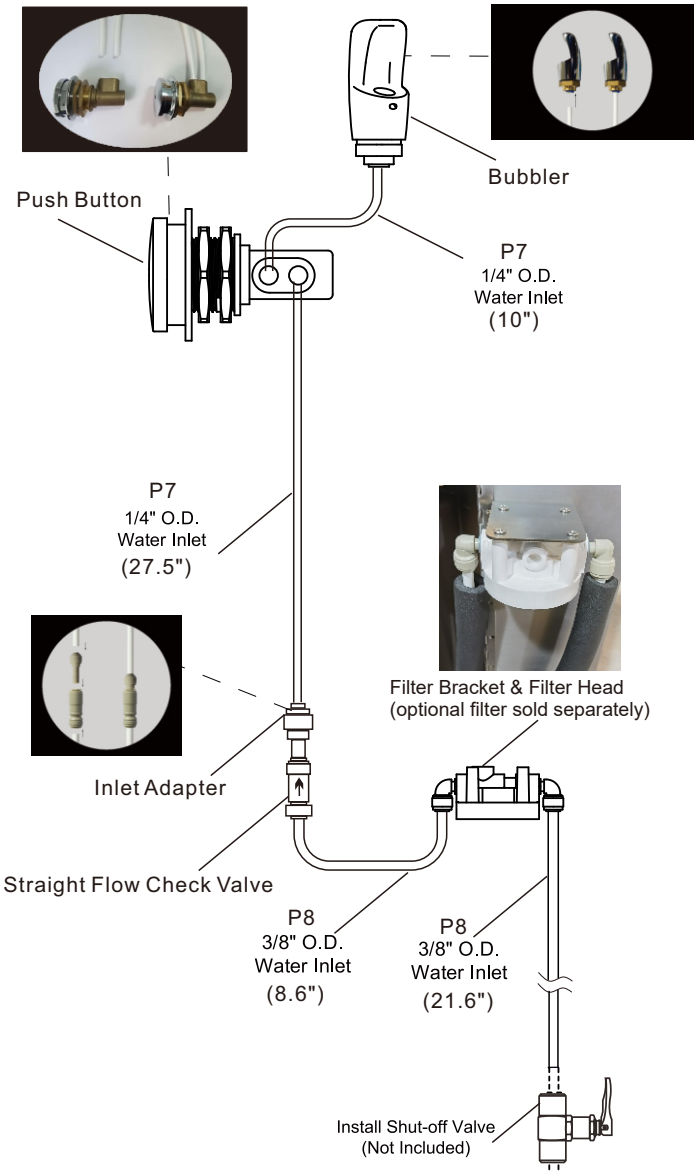


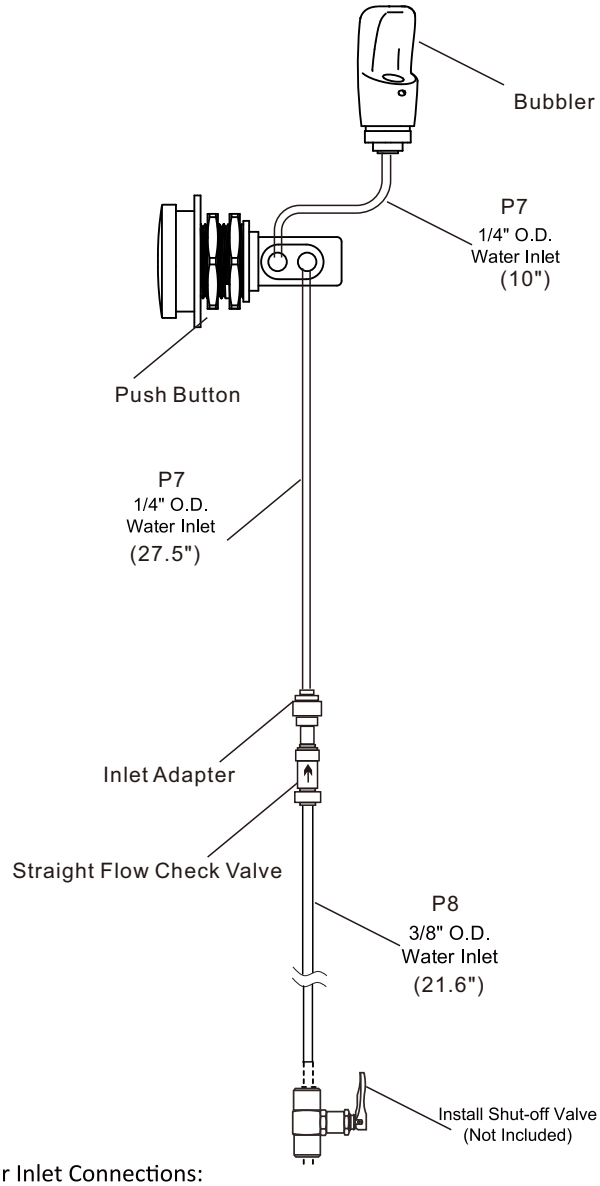


P4: Straight Flow Check Valve:

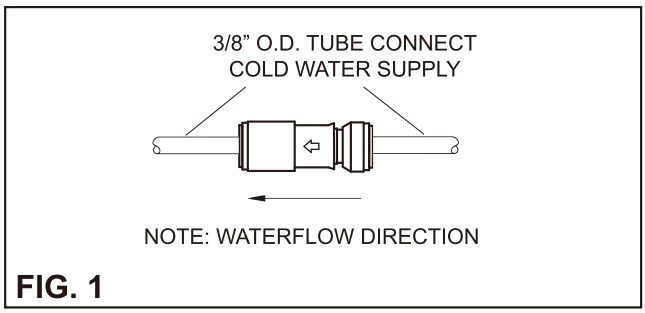


FIG. 1

All Water Inlet Connections:

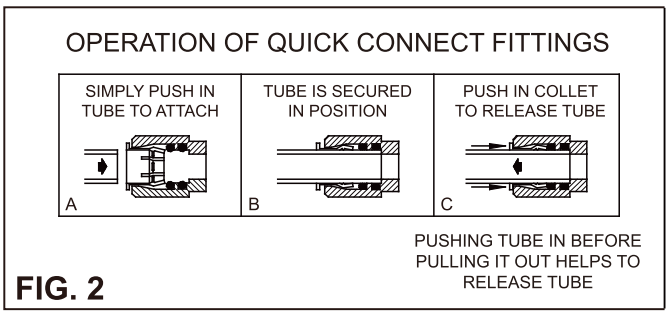


FIG. 2

- If drinking fountain is being installed in areas where cold temperatures may occur, water inlet lines are preinstalled with pipe insulation to help prevent freezing.
- Installation of a trap on the water drain line may be necessary; check local codes. Always remove trap before winterization draining.

CAUTION: Before freezing temperatures occur, see Draining and Winterization section of this manual (page 12) for proper preparation.

**WATER DRAIN LINE CONNECTION BREAKDOWN:**

- All water connections and drains must comply with local codes.
- Installation of a trap on the water drain line may be necessary; check local codes.

The Elbow Drain Connector contains quick connections that attach the Drain Tube to the Bottle Filler Drain

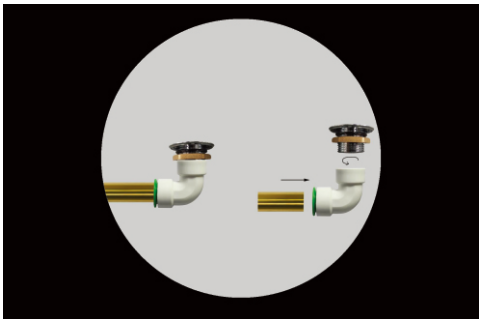

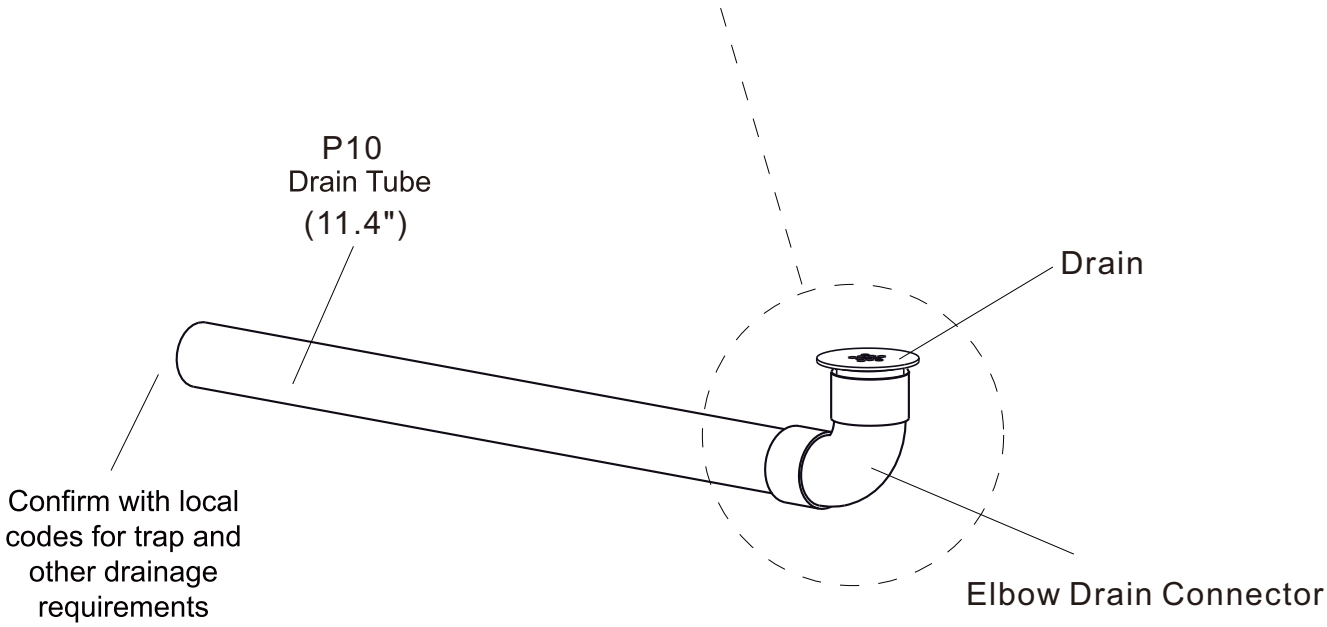


Note: Turn on water supply and check all connections for leaks and proper operation.

**WARNING:** Flush all water supply lines thoroughly before initial use.

## START-UP

Initial water flow may have sputter due to air in the water lines; this will be eliminated once air is purged from all water lines. Press and hold the push button until a steady water stream is achieved.

## STREAM HEIGHT ADJUSTMENT

To adjust the water stream height, insert a small flathead screwdriver through the access hole in the center of the push button and turn the adjustment screw. Turn clockwise to raise the stream height and counterclockwise to lower the stream height. For best adjustment, the stream should be approximately 1-1/2" above the top of the bubbler, (see FIG.3).

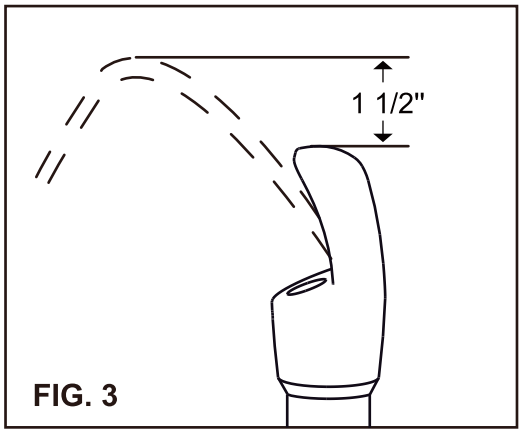


FIG. 3

**CAUTION:** The fountain is rated for inlet water pressure of 20-105 PSI. A pressure reducing regulator should be used if the inlet water supply exceeds 105 PSI. Any damage caused by reason of connecting this product to supply line pressures lower than 20 PSI or higher than 105 PSI will void warranty.

## DRAINING AND WINTERIZATION

- Before freezing temperatures occur, turn off the water at the shut-off valve, disconnect the water supply line tubing and blow out lines. Press down on push button to release any air pressure that may remain in the lines.
- Remove trap before winterization draining.
- DO NOT allow water lines to freeze. Cracked or broken components due to freezing are not covered by warranty.