GLOBAL™ INDUSTRIAL
We can supply that.®

User's manual	Manual del usuario	Manuel de l'utilisateur
Customer Service US: 1-800-645-2986	Servicio de atención al Cliente US: 1-800-645-2986	Service à la clientèle Canada: 888-645-2986

Global Industrial 6"D Steel Rebounding Bollard with Guard Rail, 42"H, Yellow

Models: 670776 670778

CONTENTS

Ref.	QTY	Description	Ref.	QTY	Description
1	2	6"D Rebounding Bollard	H1	8	
2	1	Global Industrial Steel Guard Rail	H2	4	
3	2	6"D Rebounding Bollard Bracket Kit	H3	4	

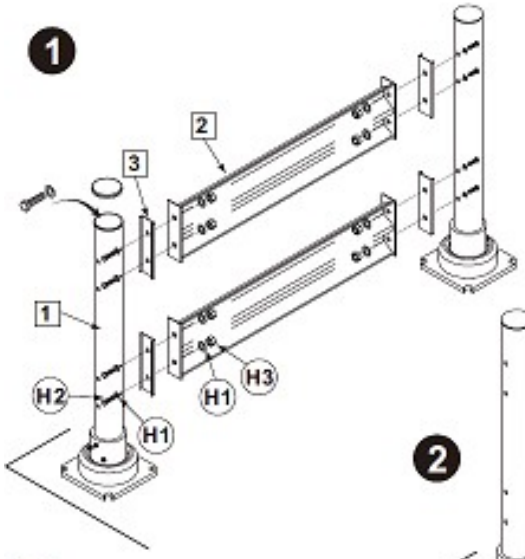

NOTE:
Contrete anchors not included

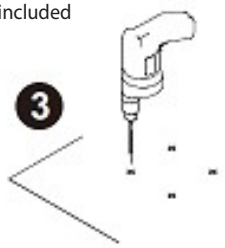

3 Drill holes using the appropriate drill bit

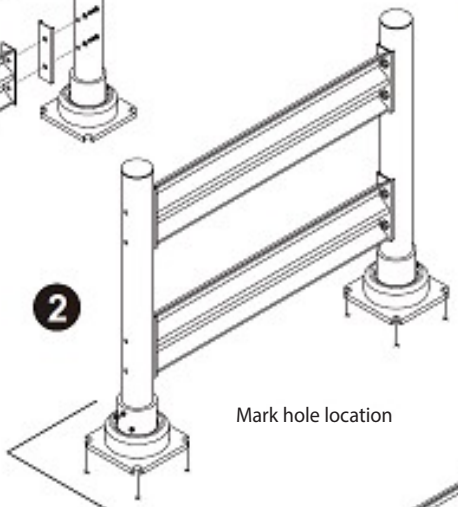

2 Mark hole location

4 Insert and set concrete anchor into hole

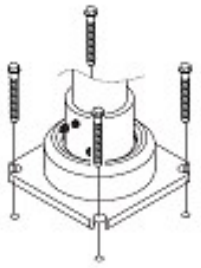

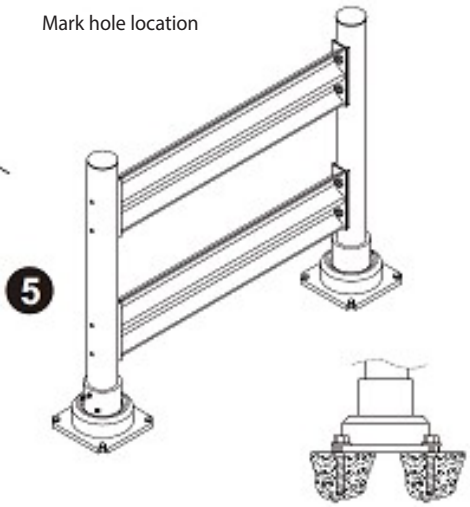

5

⚠ WARNING ⚠

DESIGNED FOR MAXIMUM IMPACT OF 5,000 POUNDS AT 7.5 MILES PER HOUR

GLOBAL INDUSTRIAL

ANCHOR BOLLARD 12" FROM OBJECT BEING PROTECTED