FS Workspace
Business • Education • Facility Supplies
FilingSupplies.com

User's manual | Manual del usuario | Manuel de l'utilisateur

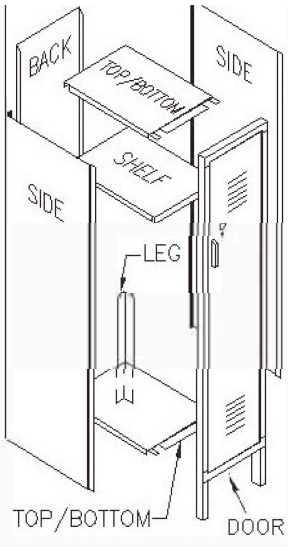

Before Assembly

Please read the complete instructions.

Check for missing or damaged parts.

Only use the specified hardware.

CAUTION: Some parts have sharp edges and corners, wear gloves during assembly.

Assembly will require the following tools:

- 2 drift pins (or 2 nail punches) for hole alignment
- 3/8" socket wrench

Lockers should be assembled on a flat, level surface and anchored according to the instructions found in Section 5.

Two people are required to remove the side panels from the packaging, with one person at each end



16 Person Locker

Locker Assembly

1. Bolt together top and bottom with bends facing down and the back with the bends facing up. Top and bottom are identical.

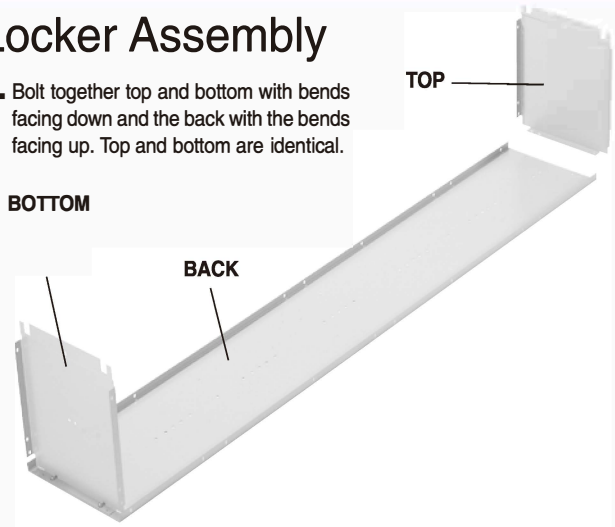

2. Bolt on side with bend in rear and facing in. Omit 2 bolts near bottom rear for legs. Install shelf by bolting to side with bend facing down and 45° bend in front.

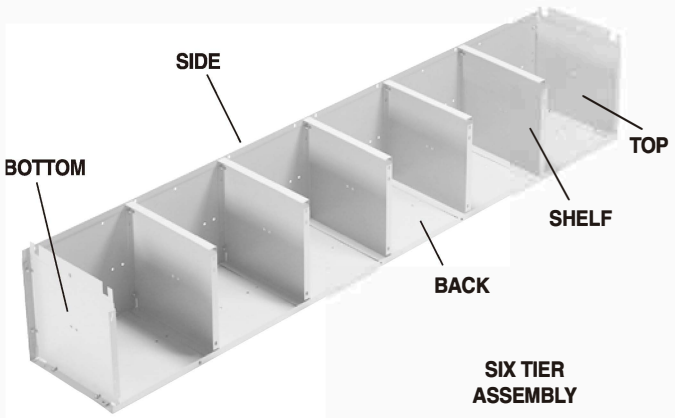

SIX TIER ASSEMBLY

3. Bolt on other side with rear bend facing in.

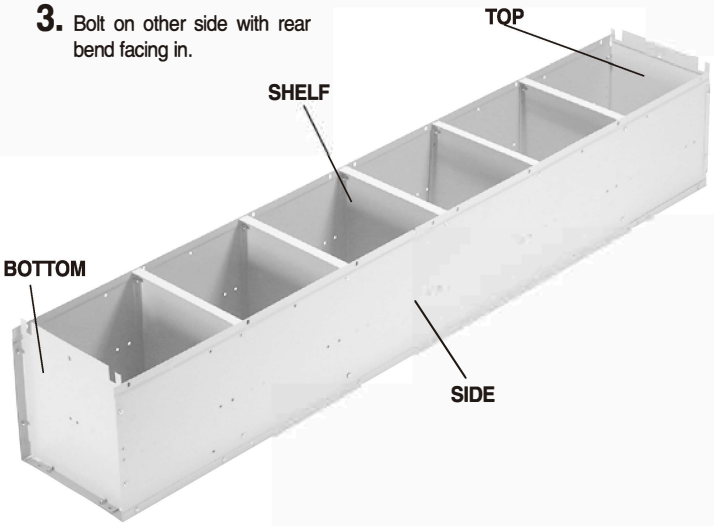

4. Insert rear legs in each end of locker. Bolt each leg in two places.

Attach Door Frame Assembly. Leave top, center and bottom bolts out if attaching to additional lockers.

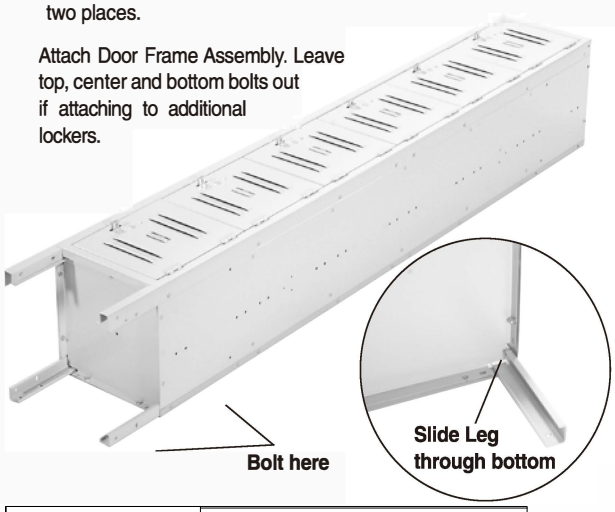

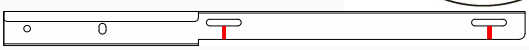

Install bolt and nut at the red-lined locations only if the floor is even.

5. Bolt locker foot to leg.

For closed base assembly, see instructions included with base.

*REPEAT STEPS 1-6 FOR OPPOSITE SIDE

WARNING:
–FLOOR ANCHOR MUST HAVE A MINIMUM PULL-OUT VALUE OF 190 LBS.
–WALL ANCHOR MUST HAVE A MINIMUM PULL-OUT VALUE OF 150 LBS.

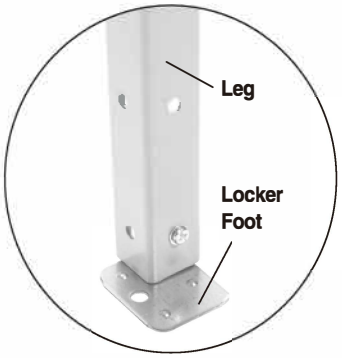

Bridge Assembly

1. Bolt together top and back with bends on top facing down and the back with the bends facing up. Top and bottom are identical.

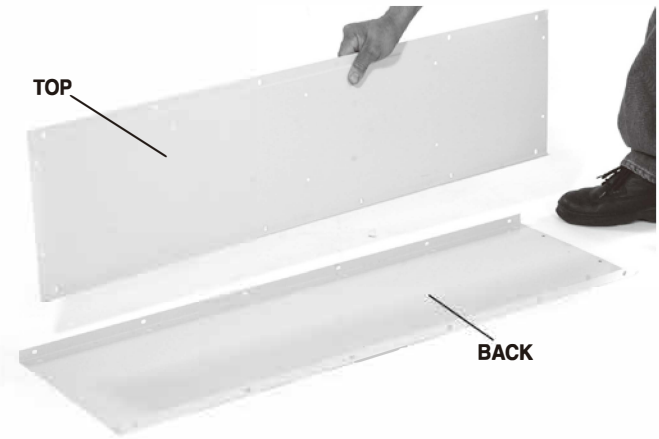

2. Bolt on bottom with bend facing in.

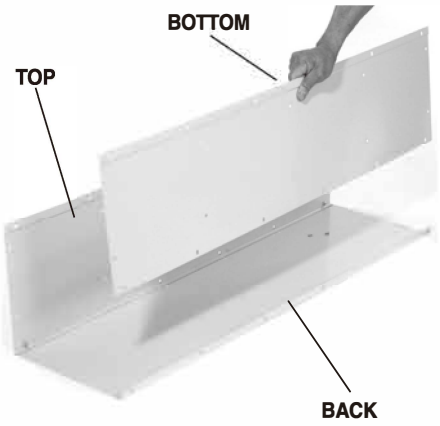

3. Bolt together tops, bottoms, and backs with a side in between.

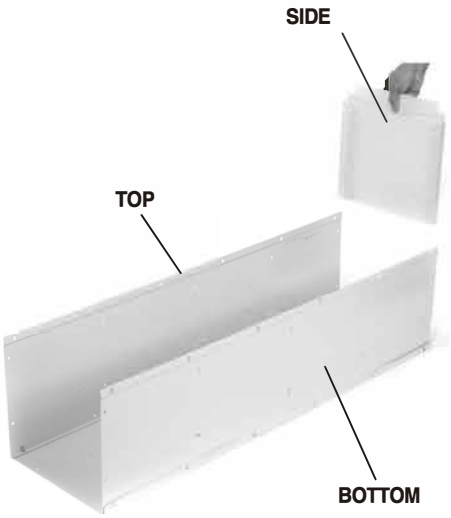

4. Repeat step 3 with other side.

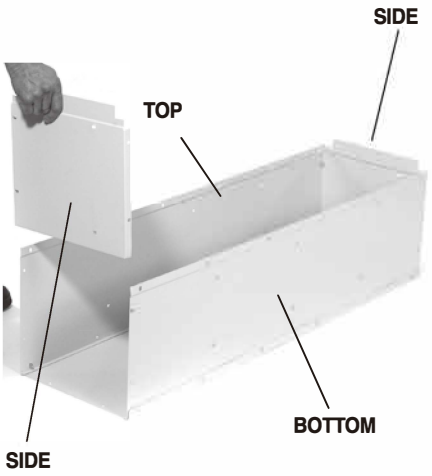

5. Bolt 3 shelves to top and bottom.

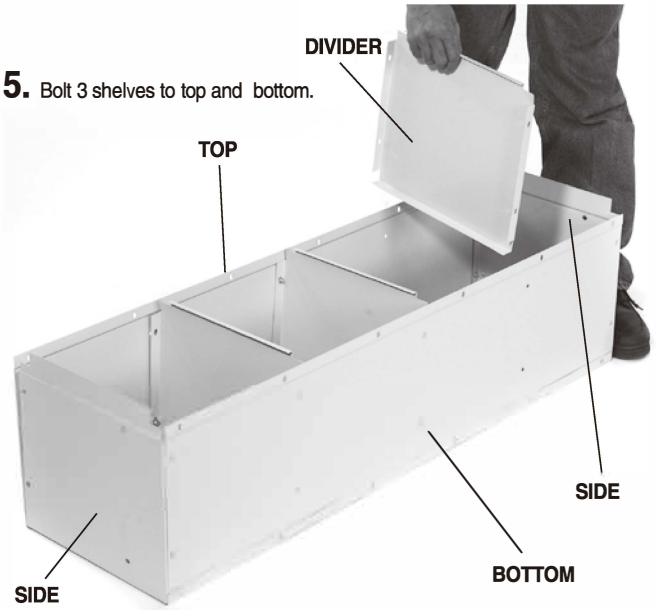

6. Attatch door frame assembly.

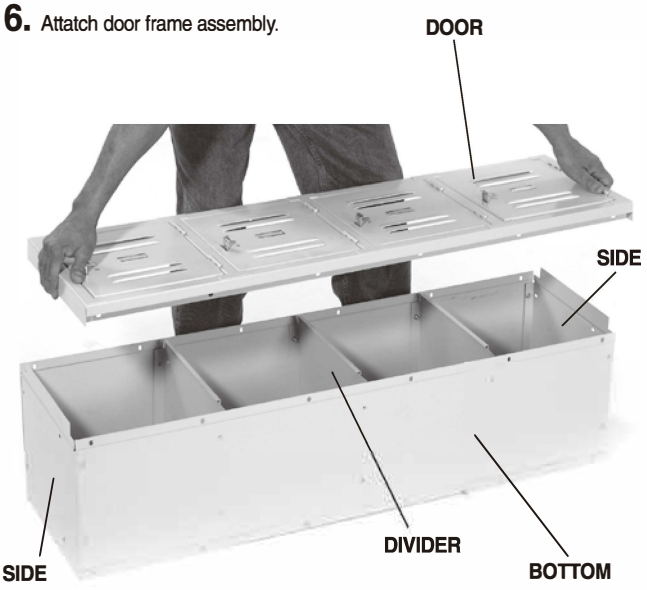

7. Bolt bridge assembly to six tier locker using 4 screws on each side.

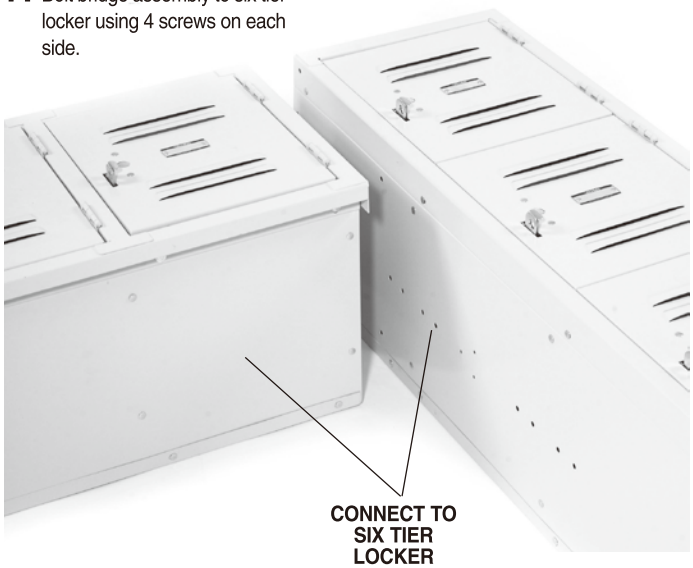

8. Repeat for other side.





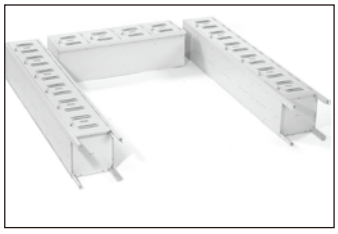

9. Bolt coat rod fitting to one side of six tier locker.



10A. Slide other coat rod fitting over rod.





11. Attatch fitting to other side.



12. Stand up locker and anchor to floor.





For Non-Digital Lock Version

Place the hasp lock in the mounting position as shown below on the door frame. Use the bolts to secure it to the door frame, and tighten it with the nuts.

