GLOBAL™ INDUSTRIAL
We can supply that.®

User's manual	Manual del usuario	Manuel de l'utilisateur
Customer Service US: 1-800-645-2986	Servicio de atención al Cliente US: 1-800-645-2986	Service à la clientèle Canada: 888-645-2986

1/4" Impact Air Screwdriver

Model:133711

IMPORTANT! Read carefully before operating this tool. Failure to operate any power tool properly can result in personal injury and/or property damage!

Free Speed (RPM) 2100	Max. Torque(in-lbs)..... 125
Air Pressure (PSI) 90	Working Torque(in-lbs)..... 45-115
Horse Size (ID) .....3/8"	Air Consumption(cfm) 3.5
Air Inlet (NPT) .....1/4"	Overall Length(in) ..... 7.7"
	Net Weight(lbs)..... 2.3

1 Safety

1. Always wear approved eye and respiratory protection.
2. Have throttle in "off" position when connecting to air supply.
3. Disconnect tool before performing service, changing accessories, or when not in use.
4. Always be in a safe working distance from others when using tools.
5. Keep tools clean and oiled for best and safest performance.
6. Follow instructions for lubricating and changing accessories.
7. Do not wear loose fitting clothing and remove all jewelry.
8. Always use proper hose and fittings. Never use quick change couplings attached at tool.
9. Always keep proper footing and balance.
10. Never carry tools by the hose. Keep hoses from heat, oil, and sharp edges. Check hoses for weak or worn condition before each use, making certain that all connections are secure.

2 Lubrication

Lubricate the tool daily with a good grade of air tool oil. The oil can be applied directly into the air inlet of the tool and then run the tool. A rust inhibitor oil is acceptable for air tools.

3 Air Supply

Tools of this class operate on a wide range of air pressure. It is recommended that air pressure of these tools measure 90 PSI at the tool while running free. Higher pressure and unclean air will shorten the tool's life and may create a hazardous condition.

1/4" Impact Air Screwdriver

Water in the airline will cause damage to the tool. Ensure that the air tank is drained daily Clean the air inlet filter screen on at least a weekly basis. The recommended hookup procedure can be viewed in the illustration below.

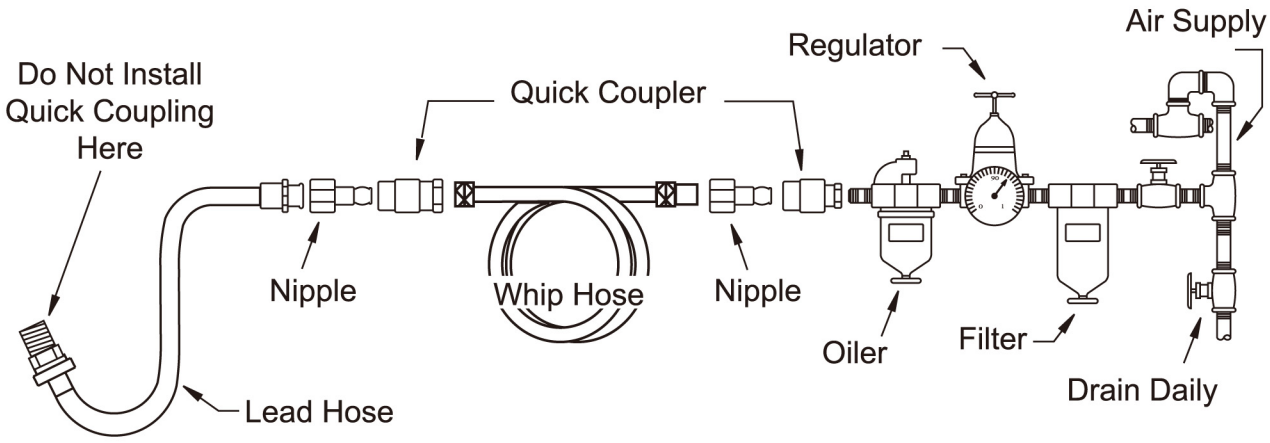

The air inlet, used for connecting the air supply, has standard 1/4" NPT American Thread.
Line pressure should be increased to compensate for unusually long air hoses (over 25 feet). Minimum hose diameter should be 3/8" I.D. and fittings should have the same inside dimensions.

4 Operating Instructions

Locate the center of the hole to be drilled by using a center punch. Place drill bit tip in punch mark. Hold drill square to the work piece and start motor. Apply steady, even pressure. Do not force. Too much pressure can cause bit to break or over heat and can cause personal injury. Too little pressure will keep bit from cutting and cause it to overheat.
If the drill jams in the work, release the throttle immediately. Disconnect the drill before removing bit. Do not attempt to free the bit by starting and stopping the motor. When changing bits, always disconnect the tool from the air line. A faulty start can cause personal injury.
The air inlet used for connecting air supply has standard 1/4" NPT thread. Have throttle in "off" position when connecting to air supply. Disconnect tool before performing service, changing accessories and when not in use. Always use tool at a safe distance from other people in the work area.

5 Maintenance

Other factors outside the tool may cause loss of power or erratic performance. Reduced compressor CFM output, excessive drain on the air line, moisture or restriction in air lines or the use of hose connections of improper size or poor condition may reduce air flow. Dirt or debris deposits in the tool may reduce power. This may be corrected by cleaning the air strainer and flushing out the tool with solvent oil. If outside appearance of the tool is in order and tool is out-of-warranty, clean, reassemble, and re-lubricate, or take tool to any air tool service center. For tools still under warranty call Global Industrial at 1-800-645-2986 for disposition.

1/4" Impact Air Screwdriver

6 Model:133711 Exploded View and Parts List

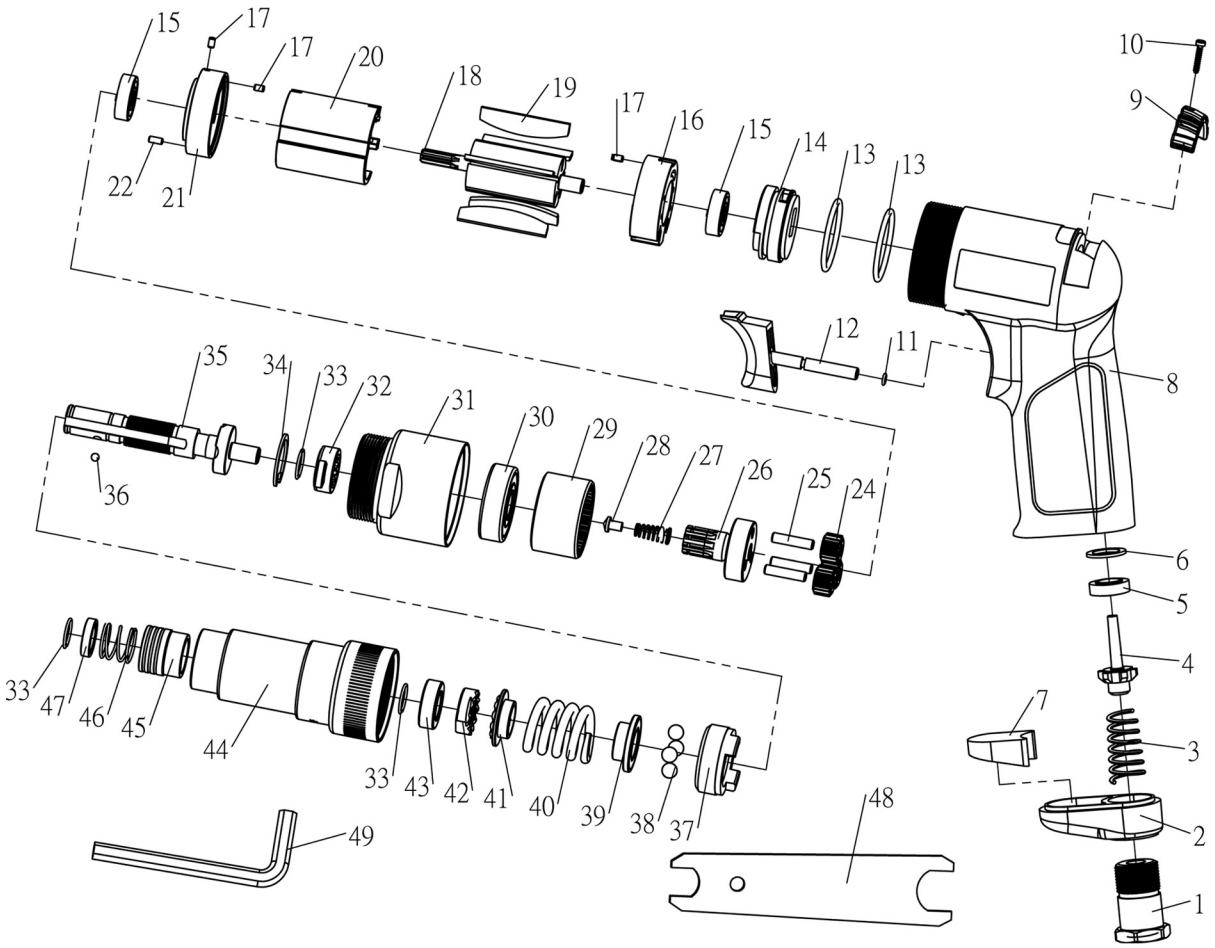

No.	Description	Q'ty
1	Inlet Bushing	1
2	Deflector	1
3	Valve Spring	1
4	Valve	1
5	Valve Seat	1
6	Spacer	1
7	Silencer	1
8	Composite Housing	1
9	Reverse Valve Lever	1
10	Taping Screw	1
11	O-Ring	1
12	Trigger	1
13	O-Ring	2
14	Valve Body	1
15	Bearing	2
16	Rear End Plate	1
17	Spring Pin	3
18	Rotor	1
19	Rotor Blade	5
20	Cylinder	1
21	Front Plate	1
22	Pin	1
24	Planet Gear	3
25	Pin	3

No.	Description	Q'ty
26	Work Spindle	1
27	Cone Spring	1
28	Spring Guide	1
29	Internal Gear	1
30	Bearing	1
31	Clamp Nut	1
32	Drive Dog	1
33	Retaining Ring	3
34	Internal Stop Ring	1
35	Cam Spindle	1
36	Steel Ball	1
37	Clutch Carrier	1
38	Steel Ball	4
39	Washer	1
40	Spring	1
41	Washer	1
42	Adjust Nut	1
43	Spacer	1
44	Clutch Housing	1
45	Ball Retainer	1
46	Spring	1
47	Washer	1
48	Wrench	1
49	Hexagon Wrench Key	1

1/4" Impact Air Screwdriver

PLEASE READ THE FOLLOWING CAREFULLY BEFORE OPERATING:
1) Always wear Safety Goggles to guard against eye injuries caused by flying particles.
2) Light density, non-detergent lubricant oil (i.e.#60) recommended.
3) Use working pressure of 0-90 PSIG, regular speed: 2,100 RPM.

7 Notice

90% of all Air Tool problems are caused by moisture in air lines
This problem can be avoided by using Air Tool Lubricant (See "Lubrication" & "Air Supply" section of this manual)
FAILURE TO OIL can void your warranty
Warning: Dust created by power sanding, sawing, grinding, drilling, and other activities contains particles and chemicals known to cause cancer, birth defects or reproductive harm. Some examples of these chemicals are:

- Lead from lead-based paints
- Crystalline silica from bricks, cement, and other masonry products
- Arsenic and chromium from chemically treated lumber

To reduce your exposure to these chemicals, work in well ventilated areas with approved safety equipment specially designed to filter out microscopic particles.

WARNING: Cancer and Reproductive Harm - www.P65Warnings.ca.gov.

8 One Year Limited Warranty

GLOBAL Industrial air tools carry a limited 1 year warranty to be free from defects in material and workmanship for one year from date of purchase. We will repair or replace at our discretion any defective part or unit which proves to be defective in material or workmanship during this 1 year period. The foregoing obligation is GLOBAL sole liability under this or any implied warranty, and under no circumstances shall it be liable for any incidental or consequential damages.
Repairs required by abuse, misuse, damage, or repair attempts (other than GLOBAL Industrial) are not covered by this warranty.

For warranty claims and returns, please contact GLOBAL Industrial at 1-800-645-2986 or speak to your local sales representative. Be certain to include your name, address, and purchase date, and description of the suspected defect.

GLOBAL™ INDUSTRIAL
We can supply that.®

11 Harbor Park Drive, Port Washington, NY 11050
Phone: 1-800-645-2986