GLOBAL INDUSTRIAL™

We can supply that.®

User Manual	Manual de Usuario	Manuel de l'Utilisateur
Customer Service US: 1-800-645-2986	Servicio de atención al Cliente US: 1-800-645-2986	Service à la clientèle Canada: 888-645-2986

Outdoor Wall-Mount Bottle Filling Station

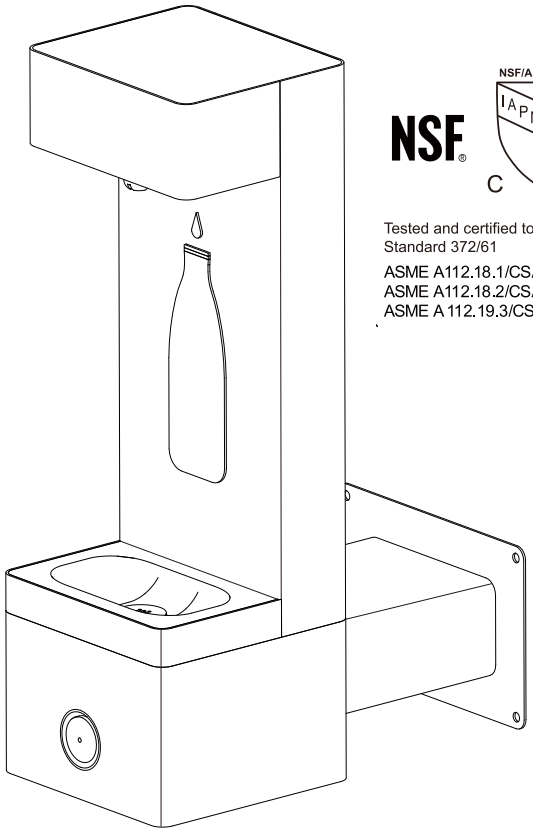

NSF/ANSI/CAN 61

Tested and certified to NSF/ANSI Standard 372/61

ASME A112.18.1/CSA B125.1
ASME A112.18.2/CSA B125.2
ASME A 112.19.3/CSA B45.4

Models: 270313, 270313GN, 270313BL, 270313BK

270313F, 270313GNF
270313BLF, 270313BKF

WARNING

- All installation work must be performed by authorized service personnel.
- Two or more people are recommended to lift and install the unit.
- To avoid the risk of property damage and/or personal injury, mount this bottle filler to a flat finished wall surface adequate to support up to 300 lbs.
- Check local codes for plumbing requirements prior to installation.
- Refer to Rough-In Guide (page 4) prior to installation.
- Thoroughly flush all water supply lines of all foreign matter before connecting to the fixture.
- Check for any leaks before use.
- DO NOT attempt to repair or replace any part of this bottle filler unless it is specifically recommended in this manual. All other services should be referred to a qualified technician.
- For use with clean, clear potable drinking water only.
- Shut-off water supply during installation to reduce the risk of water damage.
- Freezing Caution: Before freezing temperatures occur, refer to the Draining and Winterization section of this manual (page 11) for proper preparation.
- Installation of a trap on the water drain line may be necessary; remove trap before winterization draining.
- Failure to follow safety warnings and/or installation instructions will void warranty.

NOTE: Included are the necessary vandal-resistant stainless steel bolts and washers needed to anchor this unit to the wall. Installer must provide a 1-1/2” PVC drain line (if applicable) and water supply line. All connections are made inside the item through the access door, as shown in the drawings. It is recommended to install a shut-off valve (not included) on the water supply.

Outdoor Wall-Mount Bottle Filling Station

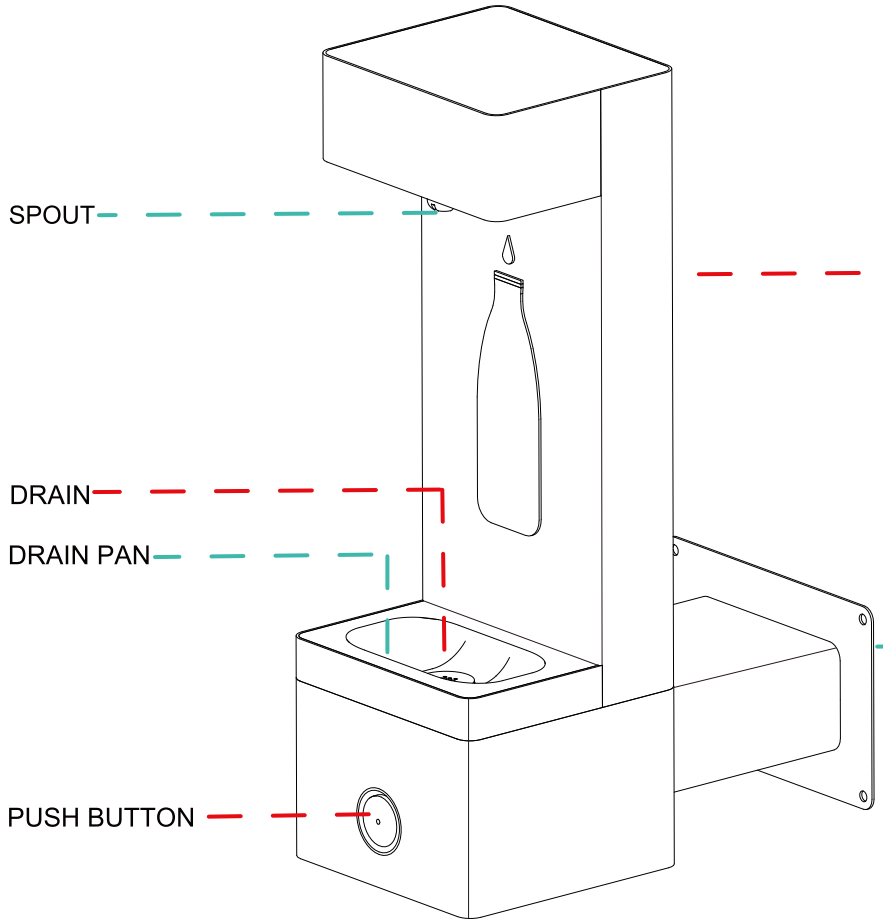

COLOR OPTIONS:

- SS316
- SS316 GREEN
- SS316 BLACK
- SS316 BLUE

WWW.GLOBALINDUSTRIAL.COM

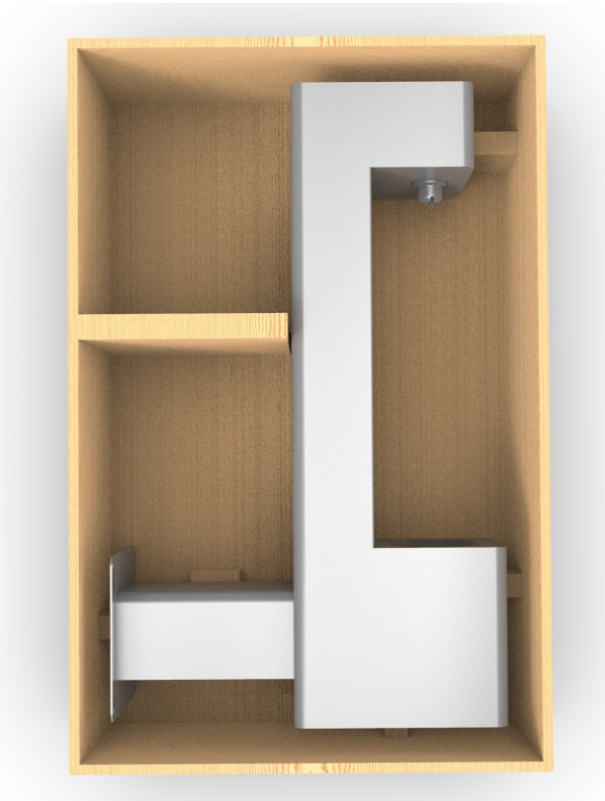

Package Contents:

-Bottle Filler

-Hardware Bag

Outdoor Wall-Mount Bottle Filling Station

SPECIFICATIONS

Features:	316 Stainless, Laminar Flow, Heavy Duty, Vandal Resistant
Finish:	SS Finish, Black(BK), Blue(BL), Green(GN)
Power:	No Electrical Required
Bubbler	Vandal Resistant
Activation Type:	Push Button
Mounting Type:	Wall Mount
Product Dimensions:	18-7/8''L x 11-3/4''W x 30-7/8''H
Weight:	49.4 lbs.
Installation Location:	Outdoor
No. of Stations:	1

PART BREAKDOWN

Ref.	Qty.	Description	
H1	1	Torx Key Wrench	
H2	1	Torx Drill Bit	
H3	4	Anchor Kit	

REQUIRED TOOLS



Safety Gloves



Adjustable Wrench



15-17mm Wrench



Hammer



Safety Glasses



Small Flathead Screwdriver



Phillips-Head Screwdriver

Rough-In Guide

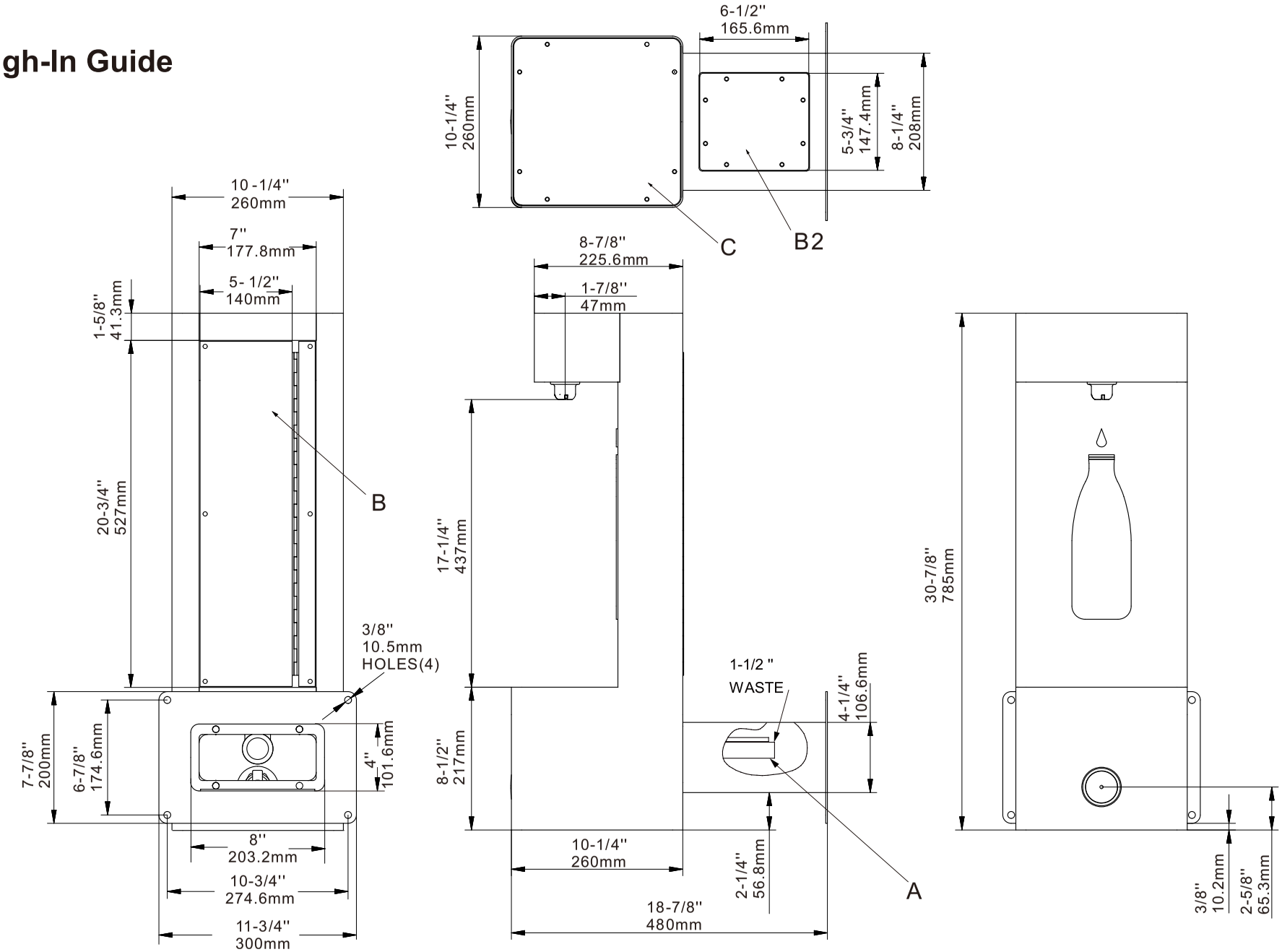

LEGEND:

A = 3/8" O.D. UNPLATED COPPER TUBE CONNECT - SHUT-OFF VALVE BY OTHERS
B=ACESS PANEL(5-1/2'' X 20-5/8'')
B2=ACESS PANEL(5-3/4'' X 6-1/2'')
C = REMOVABLE BOTTOM COVER

• See Page 11 for Draining and Winterization
• Actual product configuration may vary based on model ordered.

INSTALLATION

- It is recommended that 2 or more people install this unit.
- To avoid the risk of property damage and/or personal injury, mount this bottle filler to a flat finished wall surface adequate to support up to 300 lbs.
- Locate and install plumbing through wall as required. Refer to Rough-In Guide (page 4) for proper location and correct plumbing.
- Install a drainable shut-off valve (not included) if in a freezable environment.
- Installation of a trap on the water drain line may be necessary; check local plumbing codes.

WARNING: The bottle filler is rated for inlet water pressure of 20-105 PSI. A pressure reducing regulator should be used if the inlet water supply exceeds 105 PSI. Any damage caused by reason of connecting this product to supply line pressure higher than 105 PSI will void warranty.

1. REMOVE ACCESS PANELS

To gain access to the drain and water line connections, remove the access panels using the provided torx key wrench (H1) or torx drill bit (H2) to remove all (11) M6 x 10 flat-head anti-theft screws on back side of the bottle filler

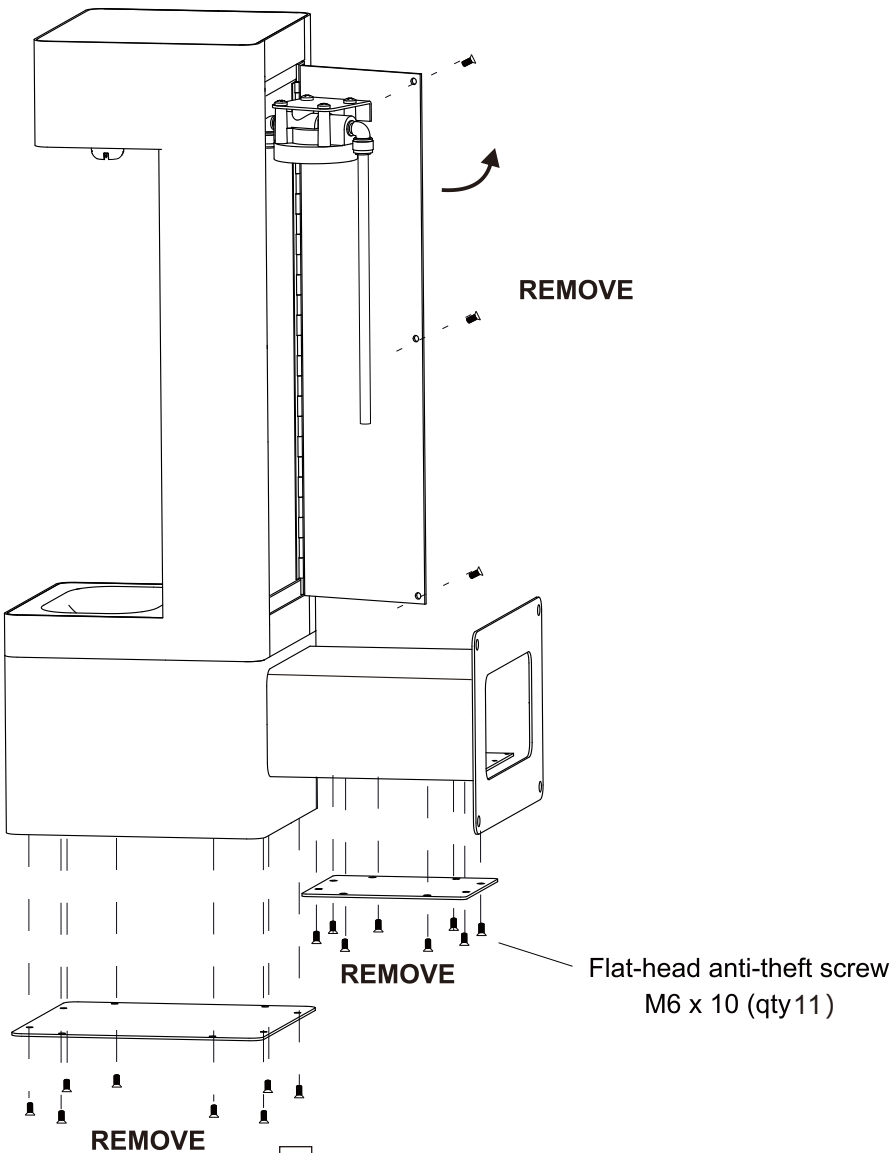

2.MOUNT PEDESTAL TO WALL

- Locate and install plumbing through the wall as required. Refer to Rough-In Guide (page 4) for proper location and correct plumbing.
- This unit is designed to be installed on a finished wall capable of supporting up to 300 lbs.

Position the mounting plate over plumbing and secure to wall using provided anchor kit (H3) mounting hardware.

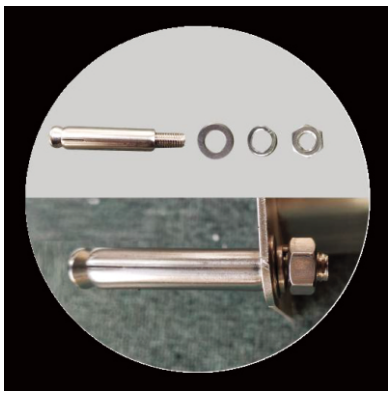

Anchor kit consists of:

- (4) M10 Nuts
- (4) M10 Lock Washers
- (4) M10 Standard Washers
- (4) M10 Anchors

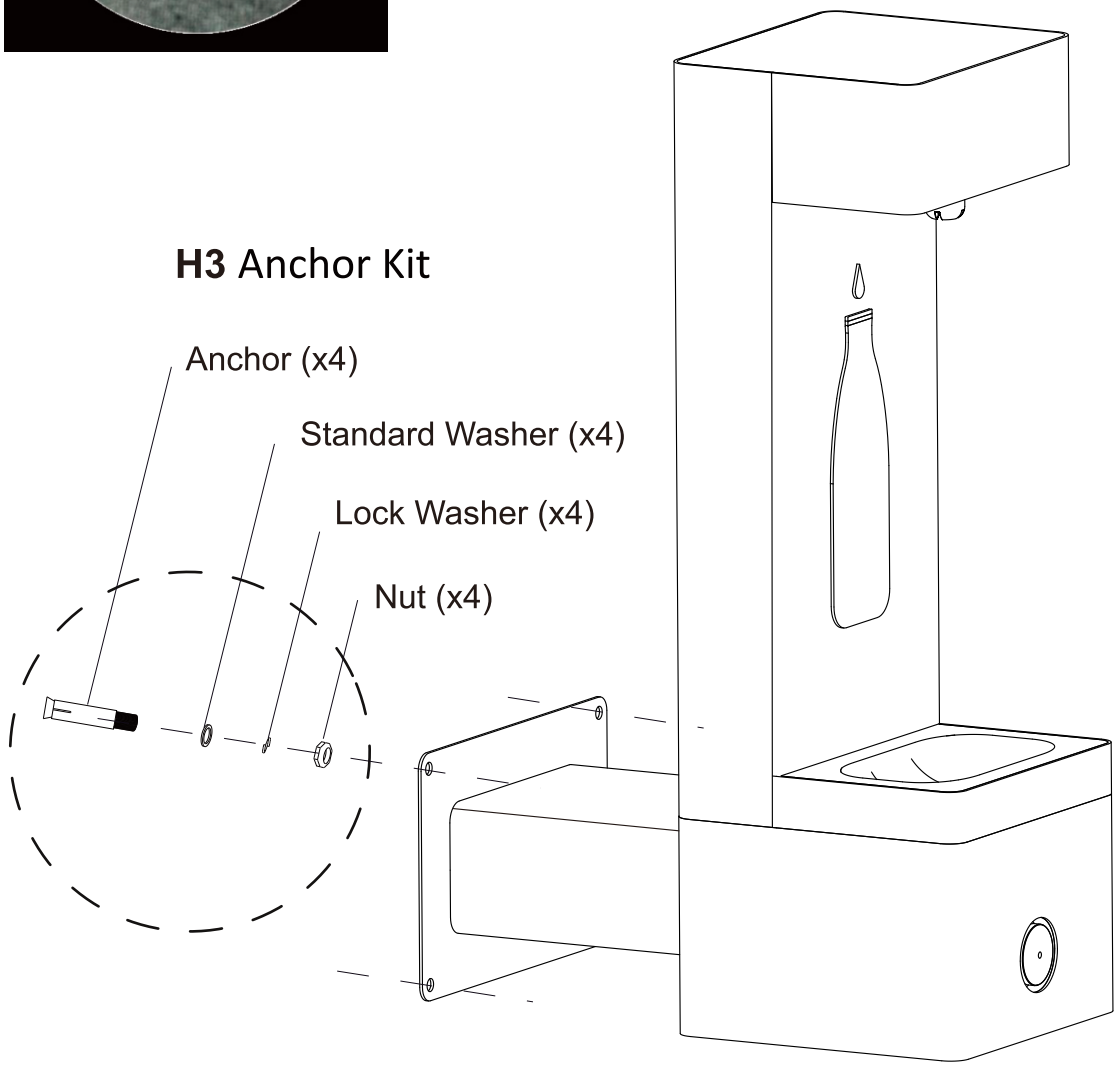

WATER INLET LINE CONNECTION BREAKDOWN:

- Install a shut-off valve (not included) on the water supply.
- All other internal water lines are preinstalled; see below illustration for reference.
- All water connections and drains must comply with local codes.

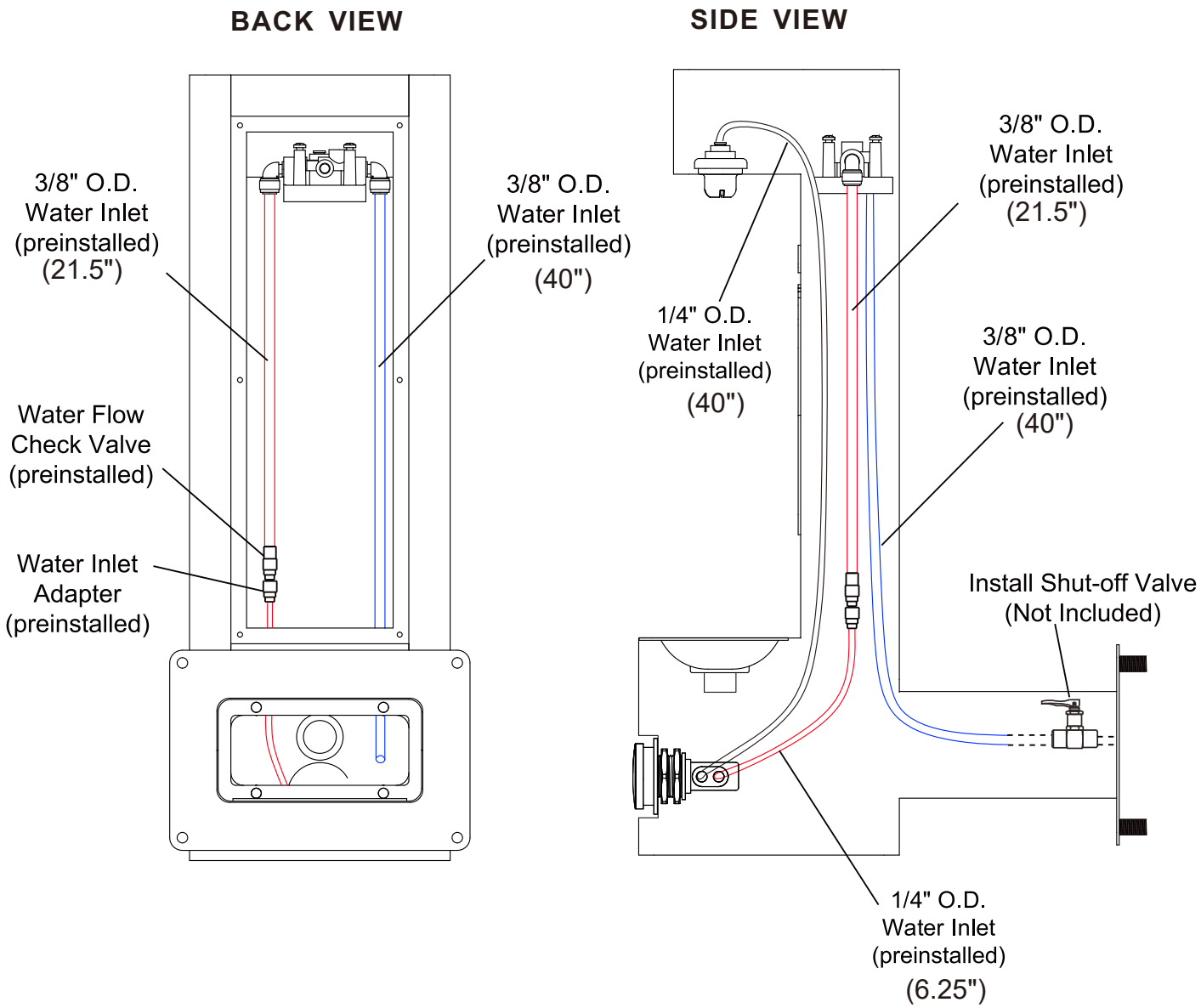

Outdoor Wall-Mount Bottle Filling Station

WATER INLET LINE CONNECTION BREAKDOWN:

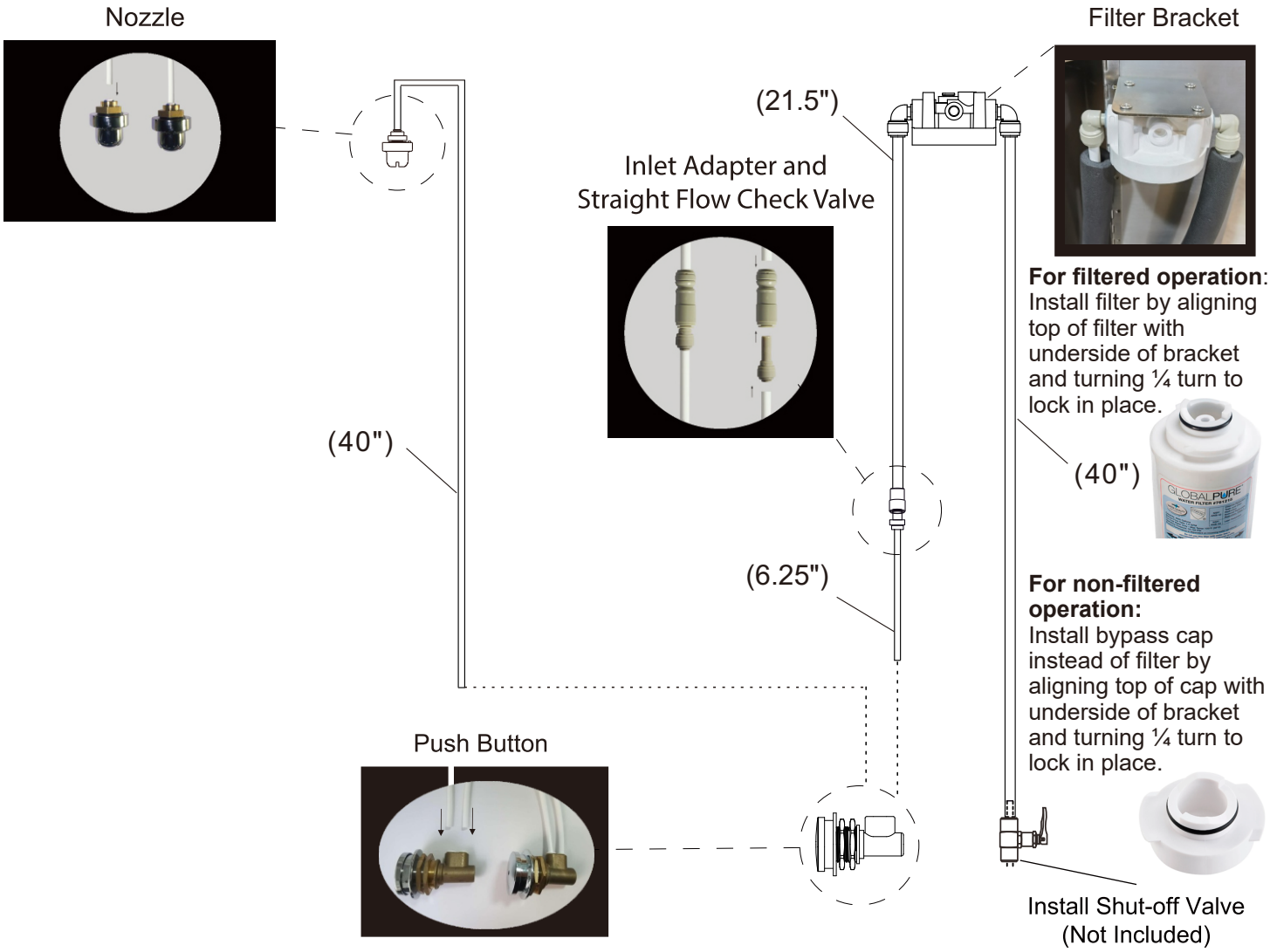

P4: Straight Flow Check Valve:

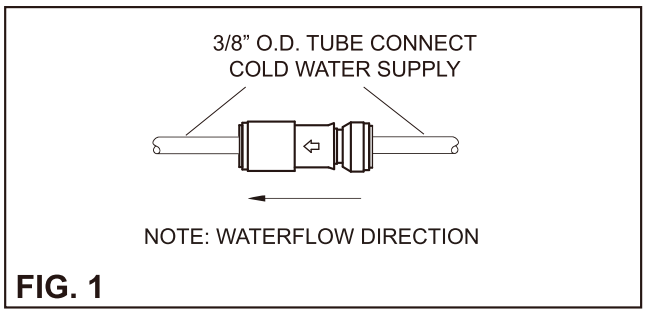

FIG. 1

All Water Inlet Connections:

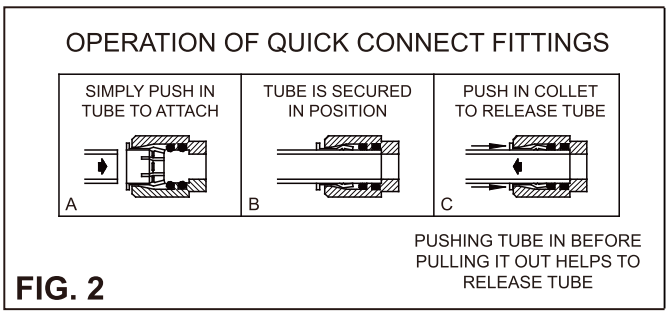

FIG. 2

- If bottle filler station is being installed in areas where cold temperatures may occur, all water inlet lines are preinstalled with pipe insulation to help prevent freezing.
- Installation of a trap on the water drain line may be necessary; check local codes. Always remove trap before winterization draining.

CAUTION: Before freezing temperatures occur, see Draining and Winterization section of this manual (page 11) for proper preparation.

WATER DRAIN LINE CONNECTION BREAKDOWN:

- Install a shut-off valve (not included) on the water supply.
- All other internal drain lines are preinstalled; see below illustration for reference.
- All water connections and drains must comply with local codes.
- Installation of a trap on the water drain line may be necessary; check local codes.

SIDE VIEW

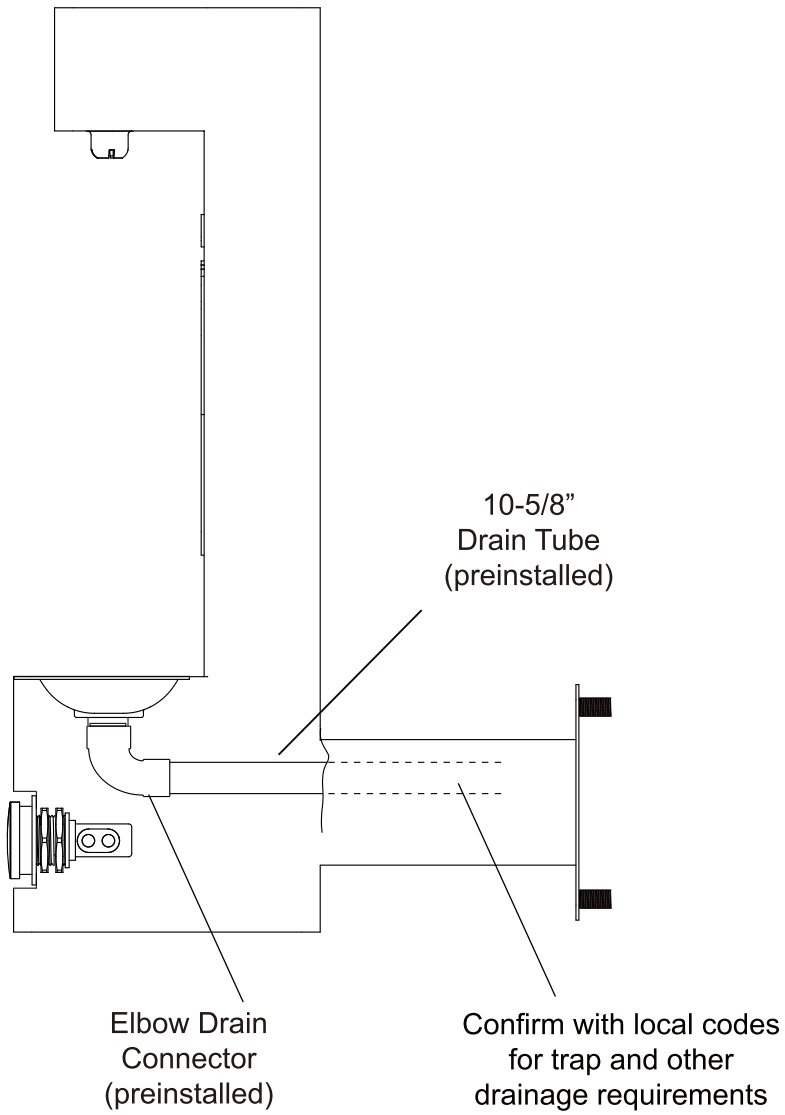

The Elbow Drain Connector contains quick connections that attach the Drain Tube to the Bottle Filler Drain

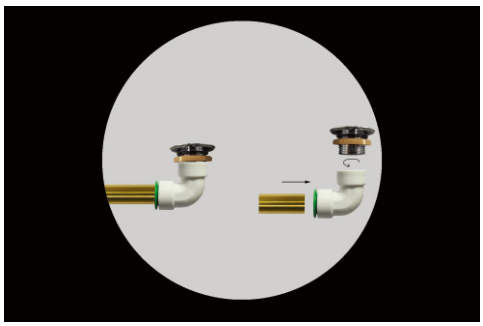

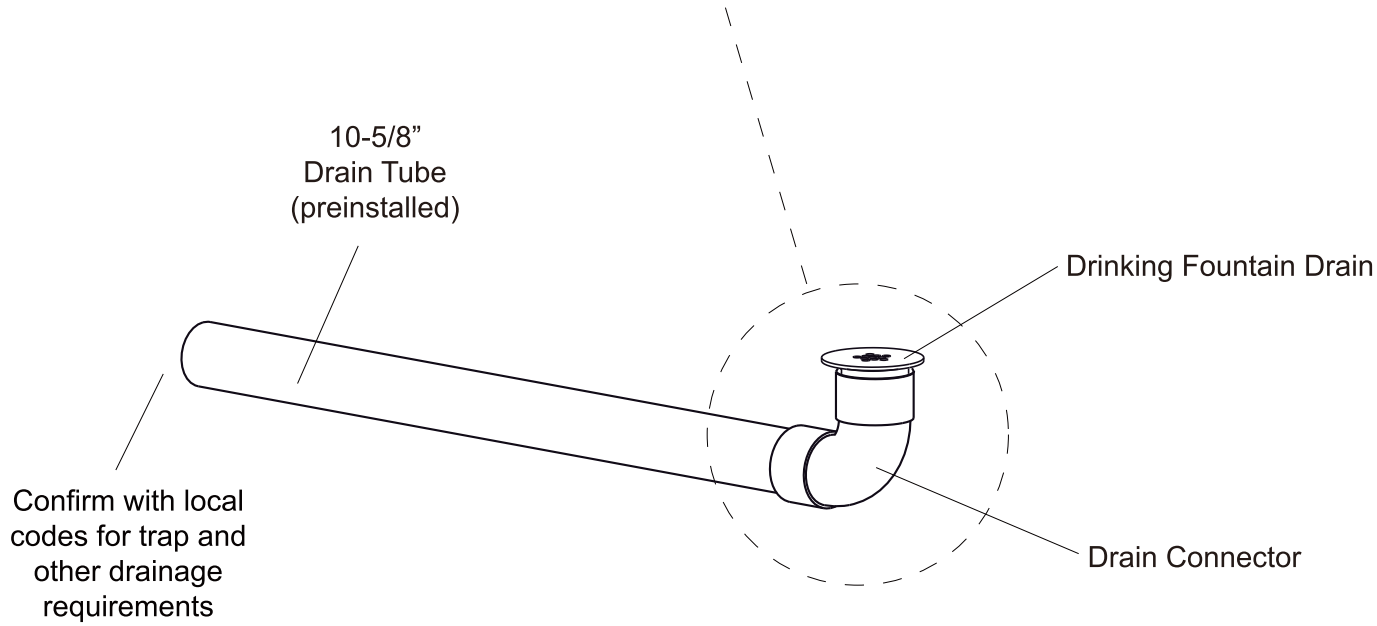

Note: Turn on water supply and check all connections for leaks and proper operation.

Reinstall all(3) access panels using the(11) M6 x 10 flat-head anti-theft screws preciously removed from the bottle filler.

WARNING: Flush all water supply lines thoroughly before initial use.

START-UP

Initial water flow may have sputter due to air in the water lines; this will be eliminated once air is purged from all water lines. Press and hold the push button until a steady water stream is achieved.

STREAM HEIGHT ADJUSTMENT

To adjust the water stream pressure, insert a small flathead screwdriver through the access hole in the center of the push button and turn the adjustment screw. Turn clockwise to increase the stream pressure and counterclockwise to decrease the stream pressure.

CAUTION: The bottle filler is rated for inlet water pressure of 20-105 PSI. A pressure reducing regulator should be used if the inlet water supply exceeds 105 PSI. Any damage caused by reason of connecting this product to supply line pressures lower than 20 PSI or higher than 105 PSI will void warranty.

DRAINING AND WINTERIZATION

- Before freezing temperatures occur, turn off the water at the shut-off valve, disconnect the water supply line tubing and blow out lines. Press down on push button to release any air pressure that may remain in the lines.
- Remove trap before winterization draining.
- DO NOT allow water lines to freeze. Cracked or broken components due to freezing are not covered by warranty.