Model: WBB2100437

CLEARANCE

3/8-16 x 1 Inch Grade 5 Zinc Steel Hex Cap Screws, Pack of 100

★★★★★ (0)

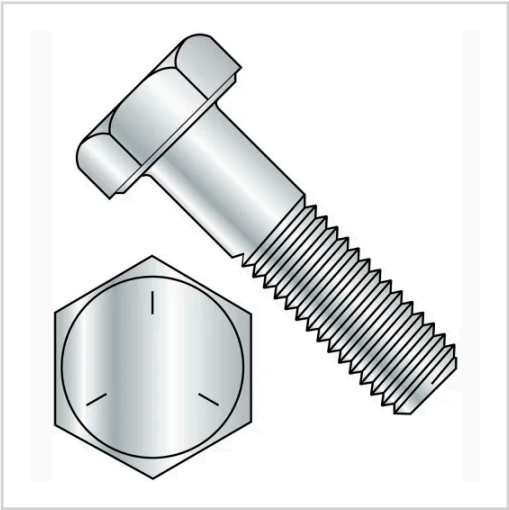

Ships within 1 Business Day

Product Description

Hex head cap screws have a hexagonal head and are uniformally threaded for use with a corresponding threaded nut or into a threaded tapped hole. Mainly used in repair or construction projects.

Specifications

Weights & Dimensions

Length	1 in
Size	3/8-16
Head	Hex
Thread	Coarse in
Unit of Measurement	Inch (Imperial)

Product Details

Country of Origin	Made in USA
Finish	Zinc
Material	Steel
Description	Hex Head Cap Screw
Package Quantity	100
Manufacturers Part Number	457138
Full or Partial Thread	Full
Grade	Grade 5
Brand	Brighton-Best