GLOBAL™ INDUSTRIAL
*We can supply that.®*

| User's manual | Manual del usuario | Manuel de l'utilisateur |
|---|---|---|
| Customer Service<br>US: 1-800-645-2986 | Servicio de atención al Cliente<br>US: 1-800-645-2986 | Service à la clientèle<br>Canada: 888-645-2986 |

# Air Receiver/Surge Tank, 30Gal., 175PSI

**Model No. 133780**

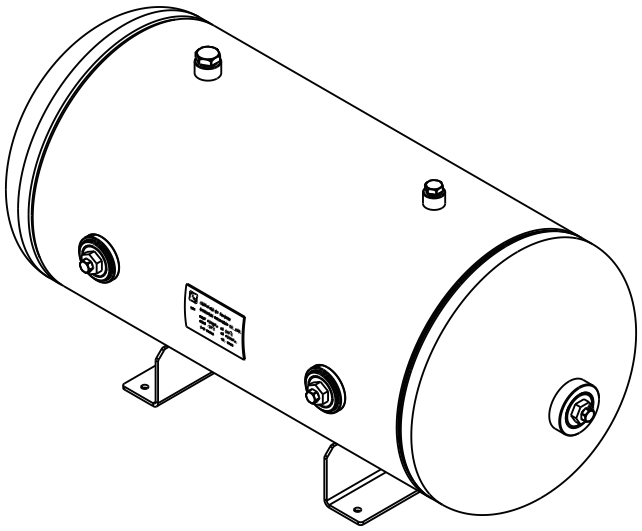

## IMPORTANT SAFETY INFORMATION:

**⚠ WARNING:**

**· This air tank is designed to safely hold 175 PSI of tank air. Overfilling with air or filling with any other gas may result in personal injury or property damage. Fill tank with air only from a low pressure tank or service station.**
**· RISK OF PERSONAL INJURY. Wear safety glasses. Never spray tank air or material at self or others. Do not use tank air for breathing. Keep the children away from air tank all the time.**
**· Do not wear loose clothing or jewelry as they can be caught in moving parts. Protective gloves and nonskid footwear are recommended. Wear restrictive hair covering to contain long hair.**
**· Do not fill Air Tank with anything other than air. Do not overinflate. Do not exceed the maximum pressure rating of any inflatable object. Check pressure frequently during inflation.The Air Tank should be examined periodically. If any damage to the welds is noted do not use the tank.**
**· The brass components of this product contain lead, a chemical known to the State of California to cause birth defects (or other reproductive harm). (California Health & Safety code § 25249.5, et seq.)**
**· Do not modify tank or components.**

**⚠ WARNING: This product can expose you to chemicals including lead, which is known to the State of Californiato cause cancer, birth defects or other reproductive harm. For more information go to www.P65Warnings.ca.gov.**

## DO NOT OPERATE THIS UNIT UNTIL YOU READ AND UNDERSTAND THIS INSTRUCTION MANUAL FOR SAFETY, OPERATION, AND MAINTENANCE INSTRUCTIONS.

## BEFORE OPERATING

**⚠ WARNING:**

**· Before using any tool, any part that appears damaged should be carefully checked to determine that it will operate properly and perform its intended function.**
**· Before operating your Air Tank, check for damaged parts.**
**· Do not exceed the maximum PSI air pressure.**
**· Use compressed air only.**

# 30 Gallon Air Surge Tank

· Do not overinflate. Never exceed the maximum pressure ratingof any inflatable. Check pressure frequently during inflation.
· Pull the Safety Pressure Bypass Valve prior to operation to ensure that the valve is functioning properly and to clear the value of any possible obstructions.
· Beware of possible explosion. The unit is capable of reserving compressed air at high pressure which could cause tires, toys or other inflatables to explode. This could result in serious injury.
· When not in use, tools must be stored in a dry location to prevent damage from the elements.
· Do not fill from any compressed gas cylinder.
· Only fill with air from a service station or low pressure air compressor.
· Do not expose the air tank to moisture or heat .
· If a leak should develop in air tank, discard immediately. Do not attempt to repair a damaged air tank.
· This product is not a toy. Do not allow children to play with or near this item.
· Use for intended purpose(s) only.
· Inspect before every use; do not use if parts are loose or damaged.

### ⚠ WARNING: RISK OF BURSTING

**WARNING:** The air tank may be UM coded (for units with air tanks greater than 6 inch diameter) according to ASME Section VIII, Div. 1 rules. All pressure vessels should be inspected once every two years. To find your state pressure vessels inspector, look under the Division of Labor and Industries in the government section of a phone book or for assistance. The following conditions could lead to a weakening of the air tank, and result in a violent air tank explosion:

### POTENTIAL CAUSES

• Failure to properly drain condensed water from air tank, causing rust and thinning of the steel air tank.
• Modifications or attempted repairs to the air tank.
• Unauthorized modifications off any other components which control air tank pressure.

### HOW TO PREVENT IT

• If air tank develops a leak, replace it immediately with a new air tank.
• Never drill into, weld, or make any modifications to the air tank or its attachments. Never attempt to repair a damaged or leaking air tank. Replace with a new air tank.
• The air tank is designed to withstand specific operating pressures. Never make adjustments or parts substitutions to alter the factory set operating pressures.

### Attachments & accessories:

• Exceeding the pressure rating of air tools, spray guns, air operated accessories, tires, and other inflatables can cause them to explode or fly apart, and could result in serious injury.
• Follow the equipment manufacturers recommendation and never exceed the maximum allowable pressure rating of attachments. Never use compressor to inflate small low pressure objects such as children's toys, footballs, basketballs, etc.

## PRODUCT SPECIFICATIONS

| | |
|---|---|
| Model No. | 133780 |
| Capacity of air tank | 30 U.S.Gallons (113.6L)* |
| Max. Working Pressure | 175PSI** |

*Tank capacity refers to actual tank volume and does not reflect capacity available during operation.
**Maximum air pressure before shut off.

• This product has been shipped completely assembled. When unpacking inspect the air tank carefully to make sure no breakage or damage occurred during shipping.
• If any parts are missing or broken,please call 888-645-2986 as soon as possible. Read the ENTIRE SAFETY GUIDELINES section at the beginning of this document including all text under subheadings therein before set up or use of this product.

## PACKING CONTENTS

| DESCRIPTION | QTY | ILLUSTRATION |
|---|---|---|
| Air tank | 1 |  |
| Owner's manual | 1 |  |

## STORING YOUR AIR SURGE TANK

### ⚠ WARNING:

IF THERE IS ANY QUESTION ABOUT A CONDITION BEING SAFE OR UNSAFE, DO NOT OPERATE THE TOOL.
Store in a dry, dust-free location away from children and any flammable materials.
Before storing, completely drain the tank of all compressed air and residual water.

## WARRANTY

**Air Receiver/Surge Tank, 30Gal., 175PSI**

If this air tank fails due to a defect in material or workmanship within 1 years from the date of purchase, return it to store with the original bill of sale for further analysis. This warranty does not include expendable parts including but not limited to blades, brushes, belts, light bulbs. This warranty covers defects in material or workmanship only. It does not cover normal wear and tear, failure due to abuse/misuse, or defects caused by careless or accidental mishandling. If this product is used for commercial or rental purposes, this warranty does not apply.