MECHANICS PRO Series Vise

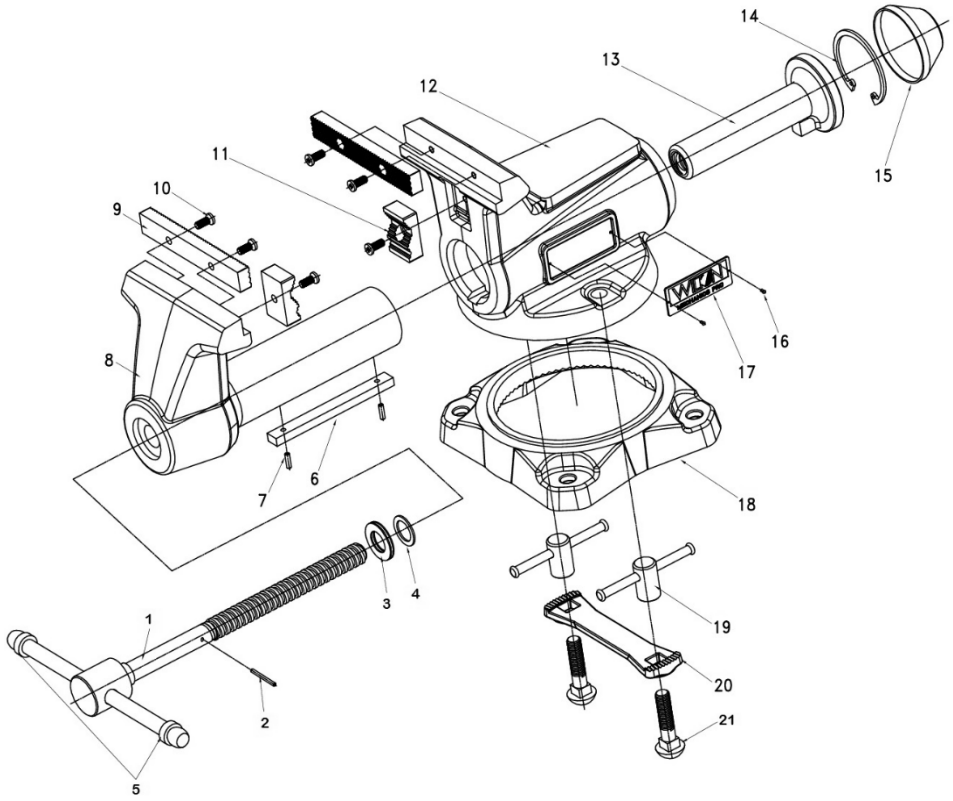

Replacement parts

		Stock no.	28810	28811	28812	28813	28814
		Model no.	845M	855M	865M	880M	8100M
ITEM	DESCRIPTION	QTY.	PART NO.				
1~5	Spindle and Handle Assembly, Complete	1	28810-001	28811-001	28812-001	28813-001	28814-001
1	Spindle and Handle	1					
2	Roll Pin	1					
3	Needle Roller Thrust Bearing	1	BB-AXK1730	BB-AXK2035	BB-AXK2035	BB-AXK2542	BB-AXK2542
4	Spindle Washer	1	89125-07	DT125B-09	DT125B-09	GB95-85	GB95-85
5	Rubber Ring	2	744M-JQ	745M-JQ	746M-JQ	748M-JQ	750M-JQ
6	Guide Key	1	744M-08	1745-08	1765-10	1780-09	750M-06
7	Elastic Cylinder Pin 4x14 mm	2					
8	Moving Body	1					
9,10	Jaw Inserts (set of 2) with Screws	1	28810-008	28811-008	28812-008	28813-008	28814-008
11	Pipe Jaws (set of 2) with Screws	1	28810-010	28811-010	28812-010	28813-010	28814-010
12	Stationary Body	1					
13	Spindle Nut	1	744M-04	745M-04	745M-04	748M-04	750M-05
14	C-Retaining Ring, Internal	1	F007076	F006092	F006092	F006093	F006093
15	End Cap	1	744M-05	745M-05	745M-05	748M-05	748M-05
16	Plate Rivet	4					
17	Wilton Logo Plate	2	745M-10	745M-10	745M-10	745M-10	745M-10
18~21	Base Plate Assembly, Complete	1	28810-017	28811-017	28812-017	28813-017	28814-017
18	Base Plate	1	744M-06	745M-06	745M-06	748M-06	748M-06
19,21	Locking Nut Assembly (one set)	2	28810-018	28811-018	28812-018	28813-018	28814-018
20	Locking Pad	1	744M-07	745M-07	745M-07	748M-07	748M-07

To order parts or reach our service department, call 1-800-274-6848 Monday through Friday, 8:00 a.m. to 5:00 p.m. CST. Having the Model Number and Serial Number of your tool available when you call will allow us to serve you quickly and accurately. Some parts are shown for reference only, and may not be available individually.

WILTON
427 New Sanford Road
LaVergne, Tennessee 37086
Ph.: 800-274-6848
www.wiltontools.com

Part No. M-28810
Edition 2 08/2018
Copyright © 2018 WILTON

⚠ IMPORTANT SAFETY INSTRUCTIONS

- Misuse of vise can cause serious injury to eyes, hands, limbs, etc.
- To ensure safety, vise must be set up and used properly.
- Before setting up and using, read, understand, and follow all instructions as outlined below.

⚠ **WARNING:** This product can expose you to chemicals including lead which is known to the State of California to cause cancer and birth defects or other reproductive harm. For more information go to http://www.p65warnings.ca.gov.

When setting up vise:

- Use proper size bolts, nuts, lock and flat washers, in all base mounting Holes. Never weld base of vise to any metal object.
- Only hand-tighten swivel base lock down nuts at the sides of the vise.
- Never use a pipe extension to tighten lock nut handles; this can cause the handles to bend and overstress the lock down bolts.
- Make sure the bench top to which the vise is mounted is properly secured.

When using vise:

- Always use vise of proper size and capacity to hold work object.
- Never use a hammer, pipe extension or cheater bar on spindle handle of vise.
- Never unscrew moveable jaw beyond the maximum specified opening of the vise.
- Never use vise as a press for assembly or disassembly of objects.
- Always wear eye and face protection when striking vise-held objects or when using power tools with a vise.
- NOTE: The spindle handle ("tommy bar") has been engineered to bend if excessive clamping pressure is applied, to prevent potential damage to vise.

Specifications for Mechanics Pro series vises

Stock no.	**28810**	**28811**	**28812**	**28813**	**28814**
Model no.	845M	855M	865M	880M	8100M
Jaw width	4.5 in. (114mm)	5.5 in. (140mm)	6.5 in. (165mm)	8 in. (203mm)	10 in. (254mm)
Maximum opening	4 in. (102mm)	5 in. (127mm)	6 in. (152mm)	8-1/2 in. (216mm)	12 in. (305mm)
Throat depth	3-1/2 in. (89mm)	3-5/8 in. (92mm)	4-3/8 in. (111mm)	4-1/2 in. (114mm)	5-1/4 in. (133mm)
Pipe jaw capacity	1/4 to 3 in. (6.4 to 76.2mm)	1/4 to 3 in. (6.4 to 76.2mm)	1/4 to 4 in. (6.4 to 101.6mm)	1/2 to 4 in. (12.7 to 101.6mm)	1/2 to 5 in. (12.7 to 127mm)
Net weight	31.0 lbs. (14.1kg)	37.9 lbs. (17.2kg)	55.6 lbs. (25.2kg)	83.1 lbs. (37.7kg)	115.3 lbs. (52.3kg)



The Wilton® lifetime warranty is for the product's lifetime with no end date. This warranty covers manufacturer's defect only and does not cover failures due directly or indirectly to misuse, abuse, negligence or accidents, normal wear-and-tear, improper repair, alterations or lack of maintenance. For more information, please visit wiltontools.com.

How to Get Technical Support

Please contact Technical Service by calling 1-800-274-6846. **Please note that you will be asked to provide proof of initial purchase when calling.** If a product requires further inspection, the Technical Service representative will explain and assist with any additional action needed. Wilton has Authorized Service Centers located throughout the United States. For the name of an Authorized Service Center in your area call 1-800-274-6846 or use the Service Center Locator on the Wilton website.

Wilton sells through distributors only. The specifications listed in Wilton printed materials and on official Wilton branded website are given as general information and are not binding. Wilton reserves the right to effect at any time, without prior notice, those alterations to parts, fittings, and accessory equipment which they may deem necessary for any reason whatsoever.

NOTE: Wilton is a division of JPW Industries, Inc. References in this document to Wilton also apply to JPW Industries, Inc., or any of its successors in interest to the Wilton brand.