User's manual	Manual del usuario	Manuel de l'utilisateur
Customer Service US: 1-800-645-2986	Servicio de atención al Cliente US: 1-800-645-2986	Service à la clientèle Canada: 888-645-2986

Outdoor Bi-Level Drinking Fountain w/ Bottle Filler & Pet Station

Models 761221, 761221BK, 761221BL & 761221GN

NSF/ANSI/CAN 61

Tested and certified to NSF/ANSI Standard 372/61

ASME A112.18.1/CSA B125.1
ASME A112.18.2/CSA B125.2
ASME A 112.19.3/CSA B45.4

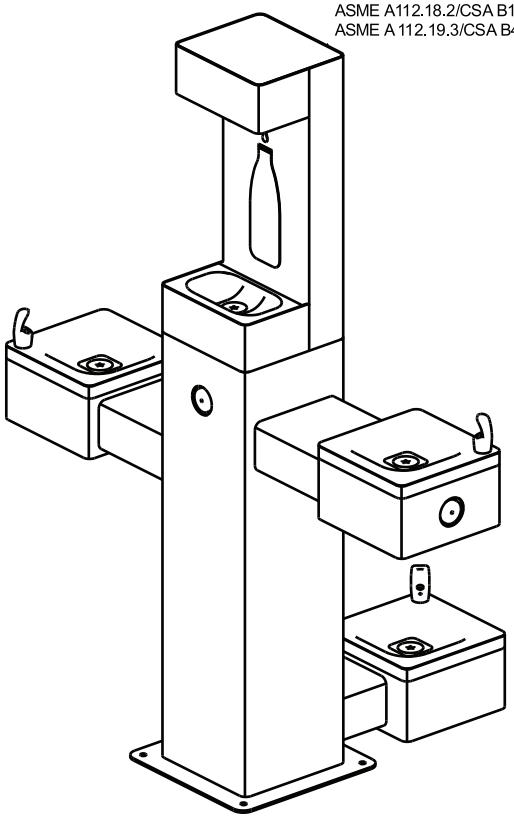

WARNING

- All installation work must be performed by authorized service personnel.
- Two or more people are recommended to lift and install the unit.
- To avoid the risk of property damage and/or personal injury, ensure the mounting surface is adequate to support 450 lbs.
- Check local codes for plumbing requirements prior to installation.
- Refer to Rough-In Guide (page 4) prior to installation.
- Thoroughly flush all water supply lines of all foreign matter before connecting to the fixture.
- Check for any leaks before use.
- DO NOT attempt to repair or replace any part of this fountain unless it is specifically recommended in this manual. All other services should be referred to a qualified technician.
- For use with clean, clear potable drinking water only.
- Shut-off water supply during installation to reduce the risk of water damage.
- Freezing Caution: Before freezing temperatures occur, refer to the Draining and Winterization section of this manual (page 13) for proper preparation.
- Installation of a trap on the water drain line may be necessary; remove trap before winterization draining.
- Failure to follow safety warnings and/or installation instructions will void warranty.

Note: This unit is designed to be installed on the surface of an existing or new concrete slab. Included are the necessary vandal-resistant stainless steel bolts and washers needed to anchor this unit. Installer must provide a 1-1/2” PVC drain line (if applicable) and water supply line. All connections are made inside the item through the access doors, as shown in the drawings. It is recommended to install a shut-off valve (not included) on the water supply.

Outdoor Bi-Level Drinking Fountain w/ Bottle Filler & Pet Station

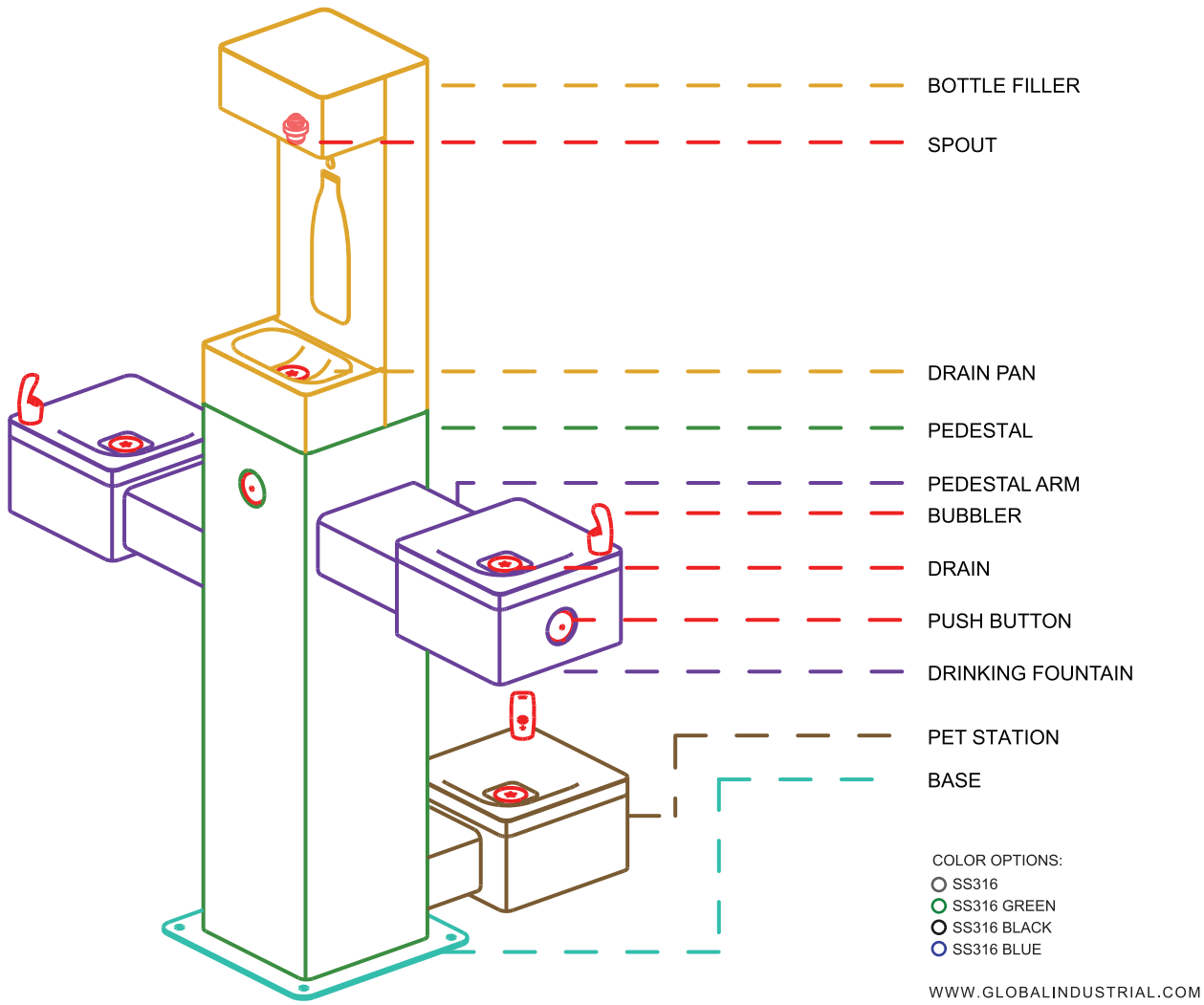

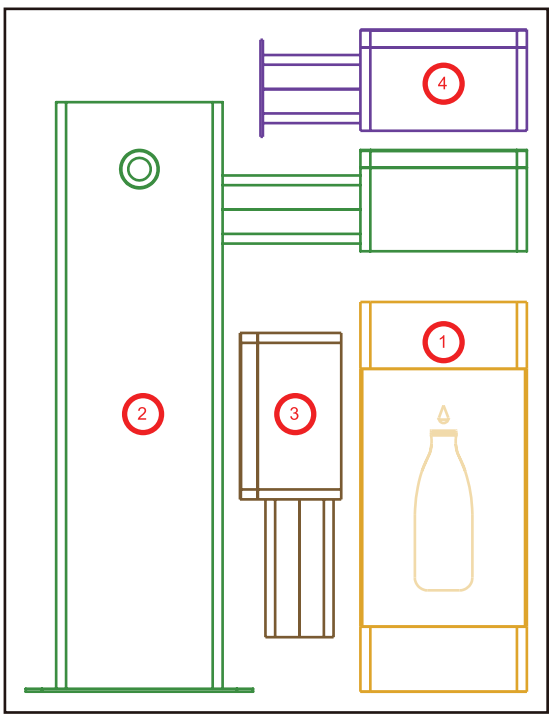

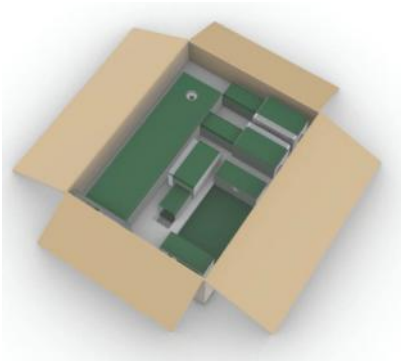

1	BOTTLE FILLER
2	OUTDOOR PEDESTAL
3	DRINKING FOUNTAIN
4	PET STATION
5	HARDWARE BAG

Outdoor Bi-Level Drinking Fountain w/ Bottle Filler & Pet Station

SPECIFICATIONS

Features:	316 Stainless, Laminar Flow, Heavy Duty, Vandal Resistant
Finish:	SS Finish, Black(BK), Blue(BL), Green(GN)
Power:	No Electrical Required
Bubbler	Vandal Resistant
Activation Type:	Push Button
Mounting Type:	Floor Mount/Free Standing
Product Dimensions:	47-3/4"L x 28-1/2"W x 60-1/4"H
Weight:	143 lbs.
Installation Location:	Outdoor
No. of Stations:	4

PART BREAKDOWN

Ref.	Qty.	Description	
P1	3	Bubbler	
P2	4	Inlet Adapter	
P3	3	Union T-Connector	
P4	1	Straight Flow Check Valve	
P5	8	1/4" O.D. Water Inlet (1) 39-1/4", (2) 25-1/2", (3) 6-1/4", (1) 13", (1) 51-1/4"	
P6	4	3/8" O.D. Water Inlet (1) 21-3/4", (1) 4", (2) 2"	
P7	12	Pipe Insulation	
P8	1	Straight Drain Connector	
P9	3	Elbow Drain Connector	
P10	3	T-Shape Drain Connector	

Ref.	Qty.	Description	
P11	6	Drain Tubing (2) 16-3/4", (1) 19", (1) 3-3/4" (1) 14-1/4", 2-1/2"	
P12	1	Offset Drain Tubing	
H1	1	Torx Key Wrench	
H2	1	Torx Drill Bit	
H3	4	Anchor Kit	
H4	8	M6 x 10 Pan Head Screw	
H5	4	M10 Washer	
H6	4	M10 Lock Washer	
H7	4	M10 Nut	
H8	4	M6 Flat Head Screw	

REQUIRED TOOLS:


Safety Gloves


Adjustable Wrench


15-17mm Wrench


Hammer


Safety Glasses


Small Flathead Screwdriver


Phillips-Head Screwdriver

Rough-In Guide

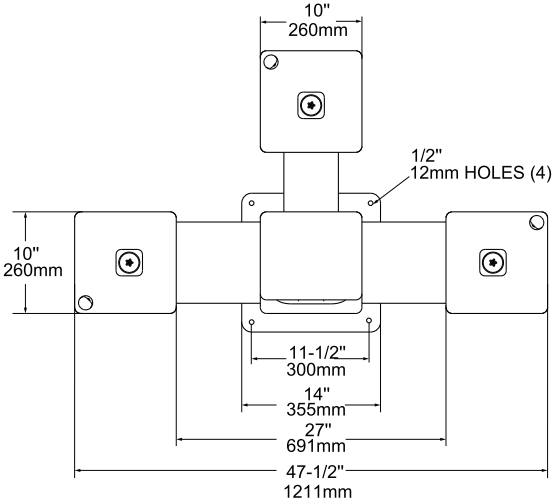

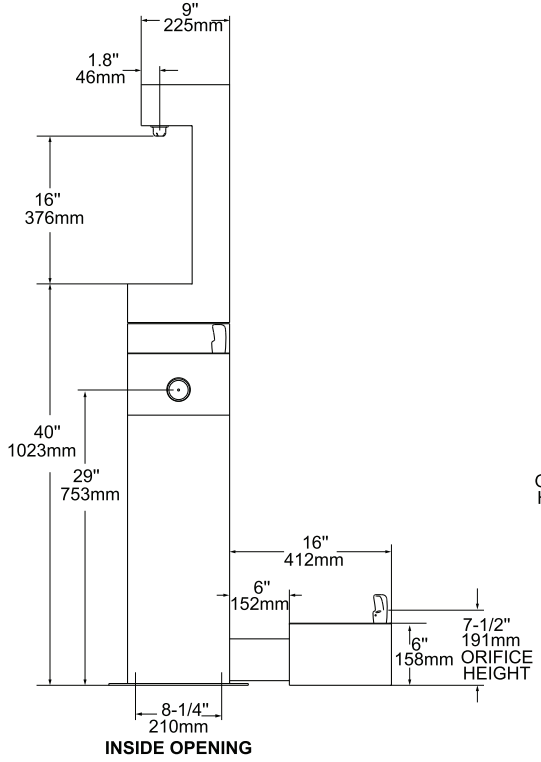

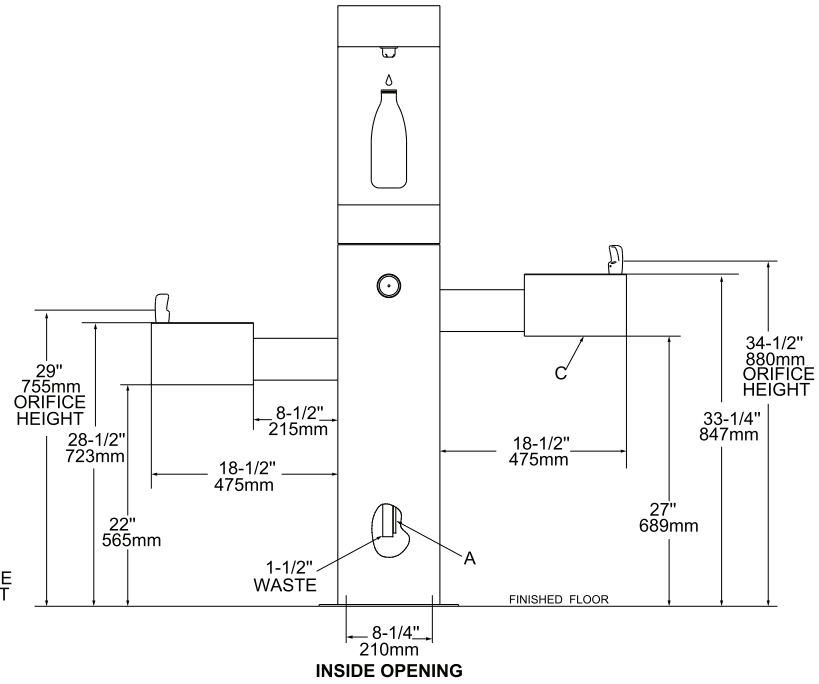

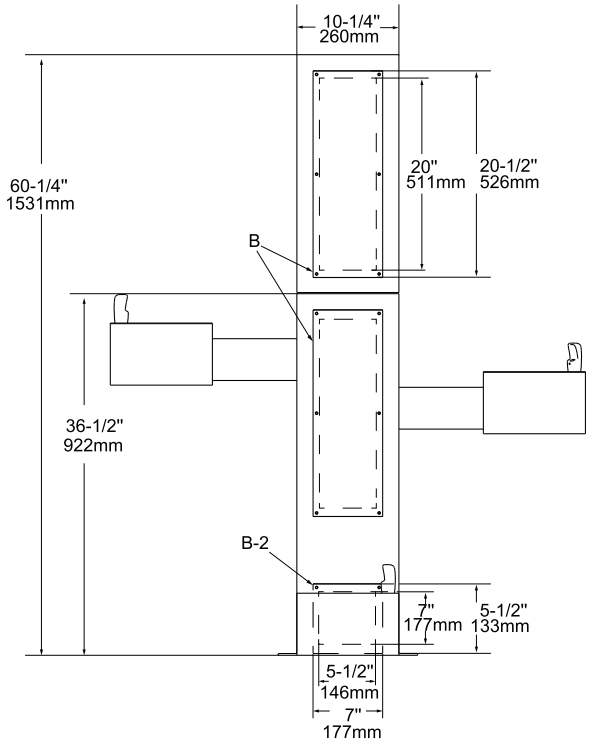

LEGEND:

A = 3/8" O.D. UNPLATED COPPER TUBE CONNECT - SHUT-OFF VALVE BY OTHERS
B = ACESS PANEL (7" X 20")
C = REMOVABLE BOTTOM COVER

• See Page 13 for Draining and Winterization
• Actual product configuration may vary based on model ordered.

INSTALLATION

- It is recommended that 2 or more people install this unit.
- This fountain must be mounted on a solid, flat surface with adequate strength (concrete pad recommended) capable of supporting 450 lbs.
- Locate and install plumbing through ground as required. Refer to Rough-In Guide (page 4) for proper location and correct plumbing.
- Install a drainable shut-off valve (not included) if in a freezable environment.
- Installation of a trap on the water drain line may be necessary; check local plumbing codes.

WARNING: The fountain is rated for inlet water pressure of 20-105 PSI. A pressure reducing regulator should be used if the inlet water supply exceeds 105 PSI. Any damage caused by reason of connecting this product to supply line pressure higher than 105 PSI will void warranty.

1. REMOVE ACCESS PANELS

To gain access to the drain and water line connections, remove all access panels detailed below using the provided torx key wrench (H1) or torx drill bit (H2) to remove all (40) M6 x 10 flat-head anti-theft screws on back side of the bottle filler and pedestal, as well as the underside of the drinking fountain and pet station pans:

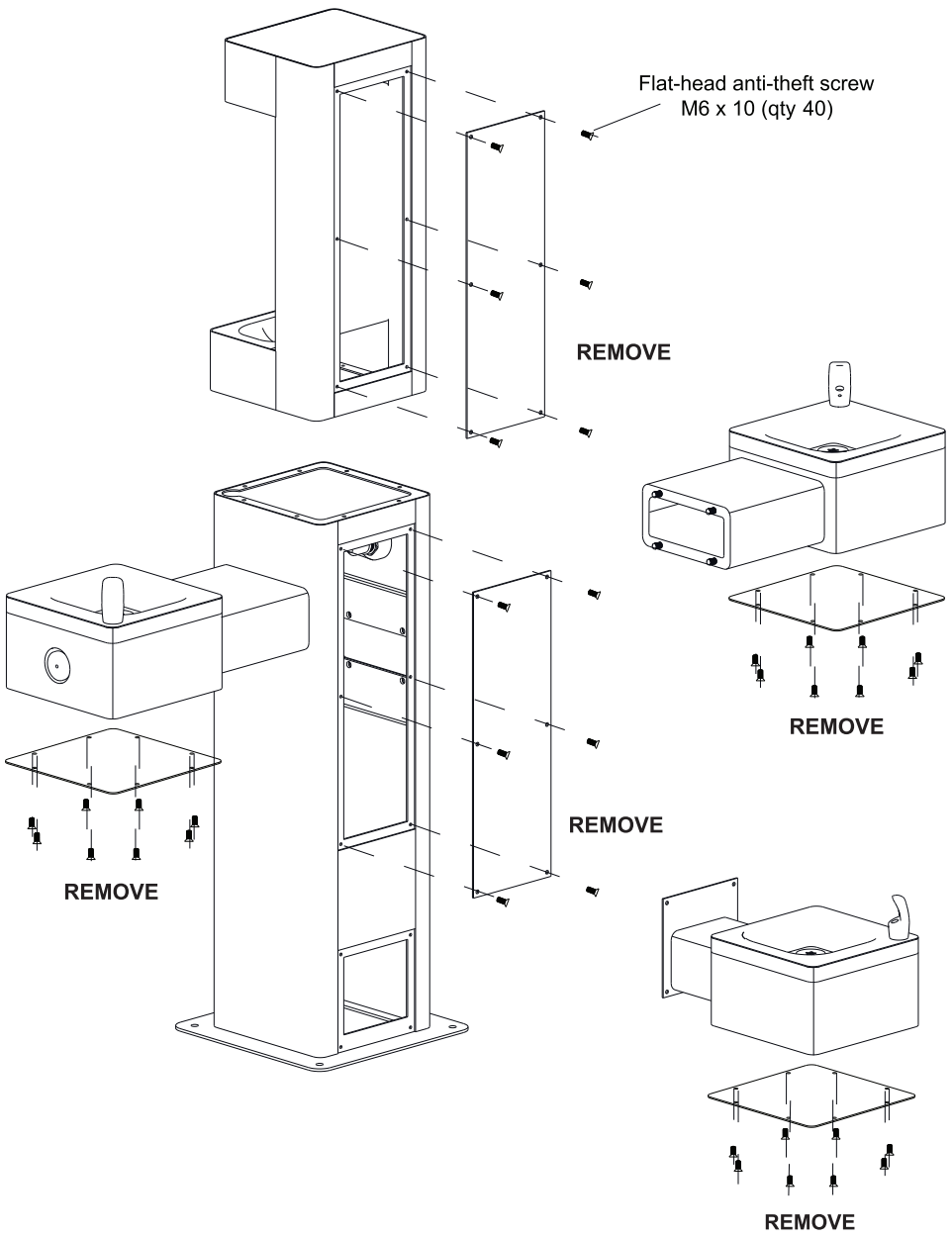

2. INSTALL BUBBLERS



2a. Unscrew and remove nut and washers from Bubblers (P1).

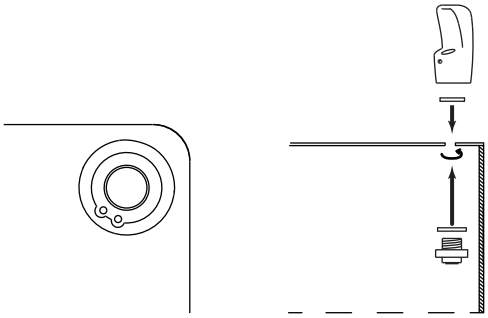

2b. Locate the hole on the drinking fountain pan surfaces. Align and sanwich with the two washers and tighten the nut to secure the bubbler.

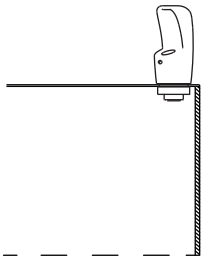

2c. Bubblers are now properly installed.

3. MOUNT PEDESTAL TO GROUND

- Locate and install plumbing through ground as required. Refer to Rough-In Guide (page 4) for proper location and correct plumbing.
- This unit is designed to be installed on the surface of an existing or new concrete slab, capable of supporting 450 lbs.

Position fountain base over plumbing and secure to ground using provided anchor kit (H3) mounting hardware (x4).



(H3) Anchor kit consists of:

- (4) M10 Nuts
- (4) M10 Lock Washers
- (4) M10 Standard Washers
- (4) M10 Anchors

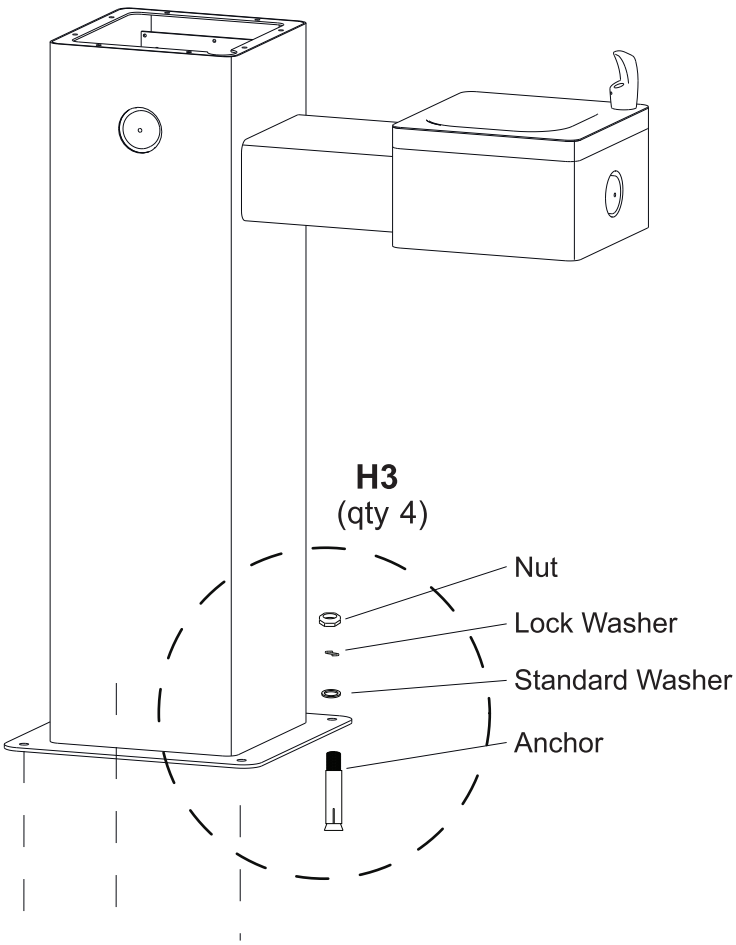

4. ATTACH BOTTLE FILLER TO PEDESTAL

Using a phillips-head screwdriver, assemble the bottle filler to the pedestal using H4 (x8) M6 x 10 pan head screws.

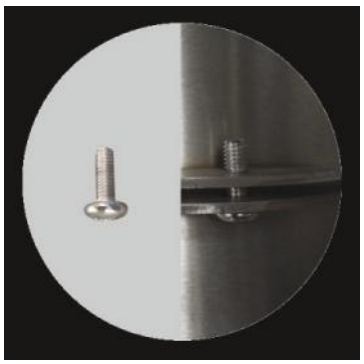

5. ATTACH DRINKING FOUNTAIN TO PEDESTAL

Assemble to the drinking fountain to the pedestal using **H5** (x4), **H6** (x4) and **H7** (x4) hardware. Tighten all nuts securely using an adj ustable wrench.



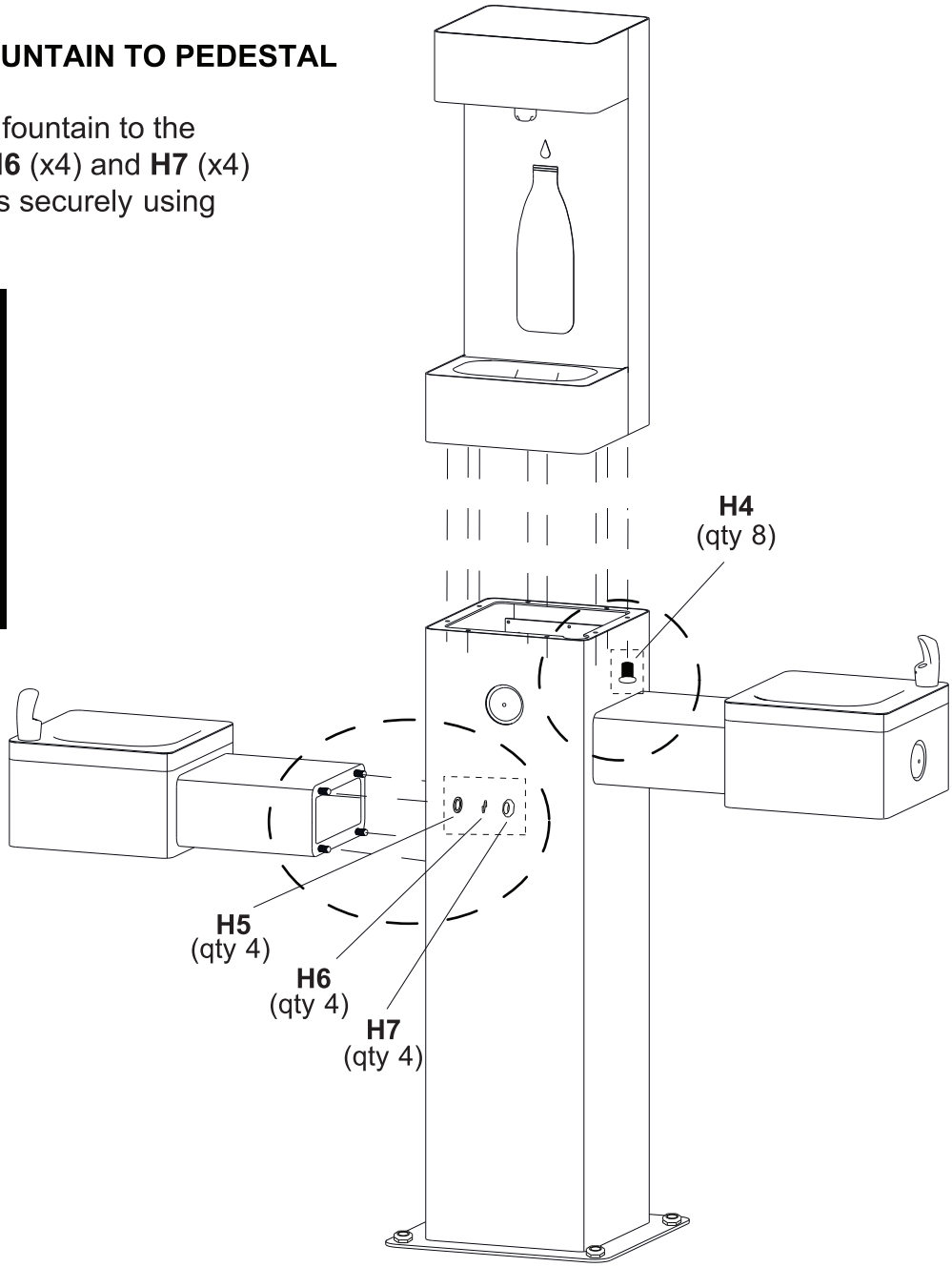

6. CONNECT WATER INLET LINES

- Install a shut-off valve (not included) on the water supply.
- All water connections and drains must comply with local codes.

Though the rear access windows, connect water inlet lines as illustrated below:



Connect (P5) to Spout

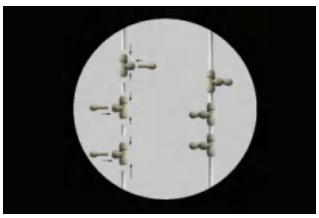

Connect Inlet Adapter (P2) to
Union T-Connector (P3)

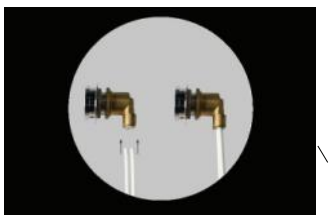

Connect (P5) to Push Button



Connect (P5) to Bubbler

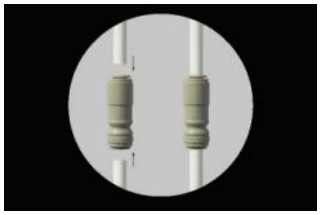

Connect (P6) to Straight
Flow Check Valve (P4)
(See Fig. 1 on next page)

WATER INLET LINE CONNECTION BREAKDOWN:

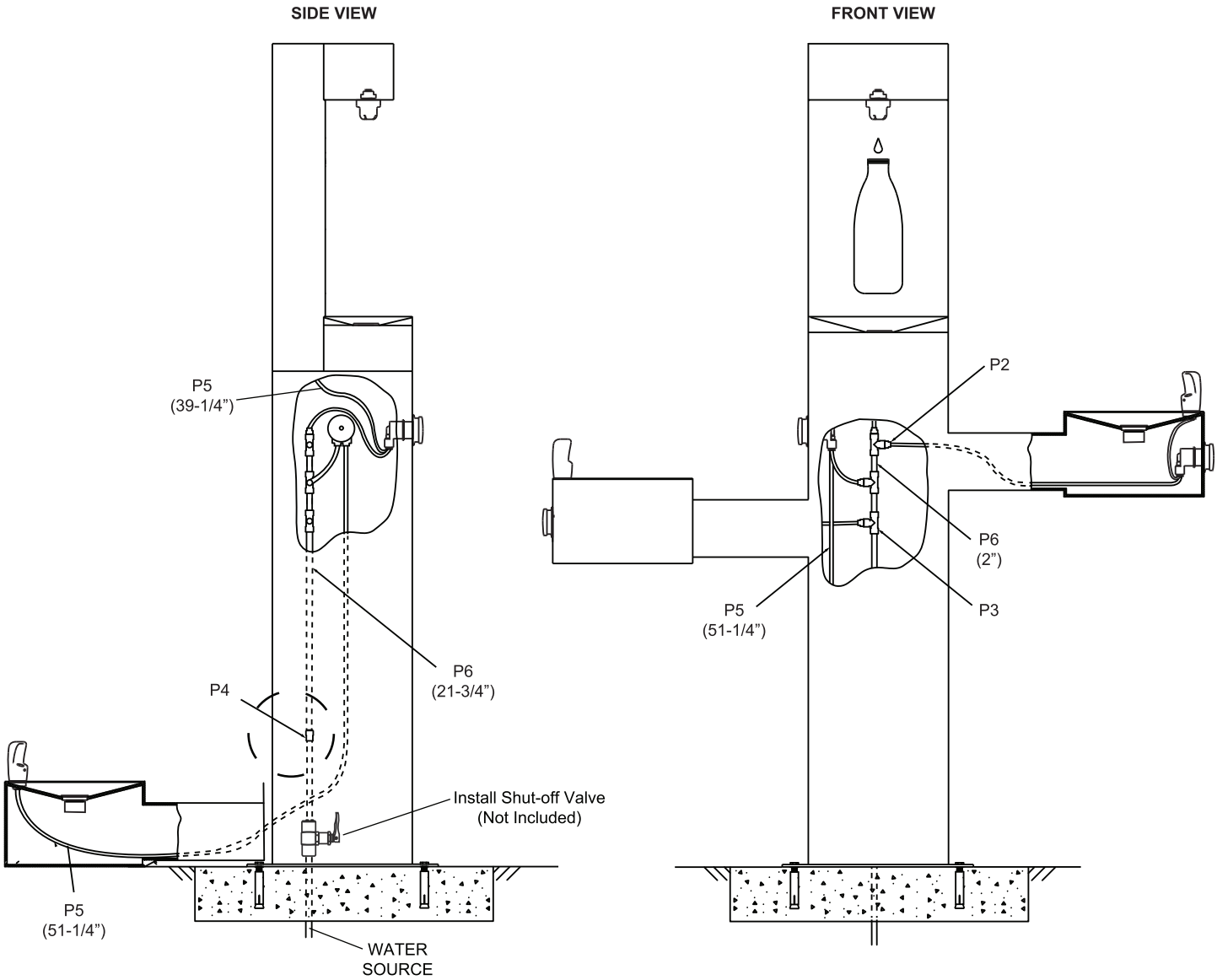

P4: Straight Flow Check Valve:

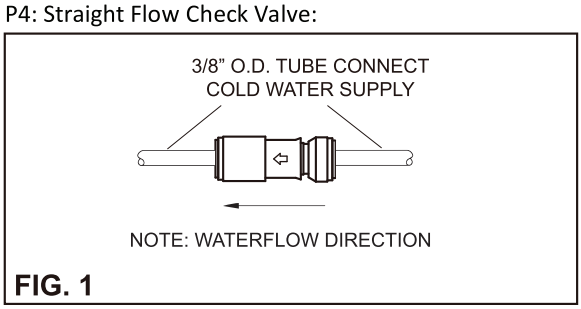

FIG. 1

All Water Inlet Connections:

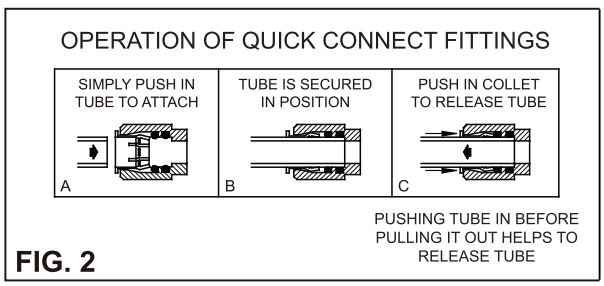

FIG. 2

- If drinking fountain is being installed in areas where cold temperatures may occur, wrap pipe insulation (P7) around all water inlet lines.
- Installation of a trap on the water drain line may be necessary; check local codes. Always remove trap before winterization draining.

CAUTION: Before freezing temperatures occur, see Draining and Winterization section of this manual (page 13) for proper preparation.

7. CONNECT WATER DRAIN LINES

- **A**ll water connections and drains must comply with local codes.
- Through the rear access windows, connect water drain lines as illustrated below.
  NOTE: All drain lines attach with *quick connect* connections.
- Installation of a trap on the water drain line may be necessary; check local codes.

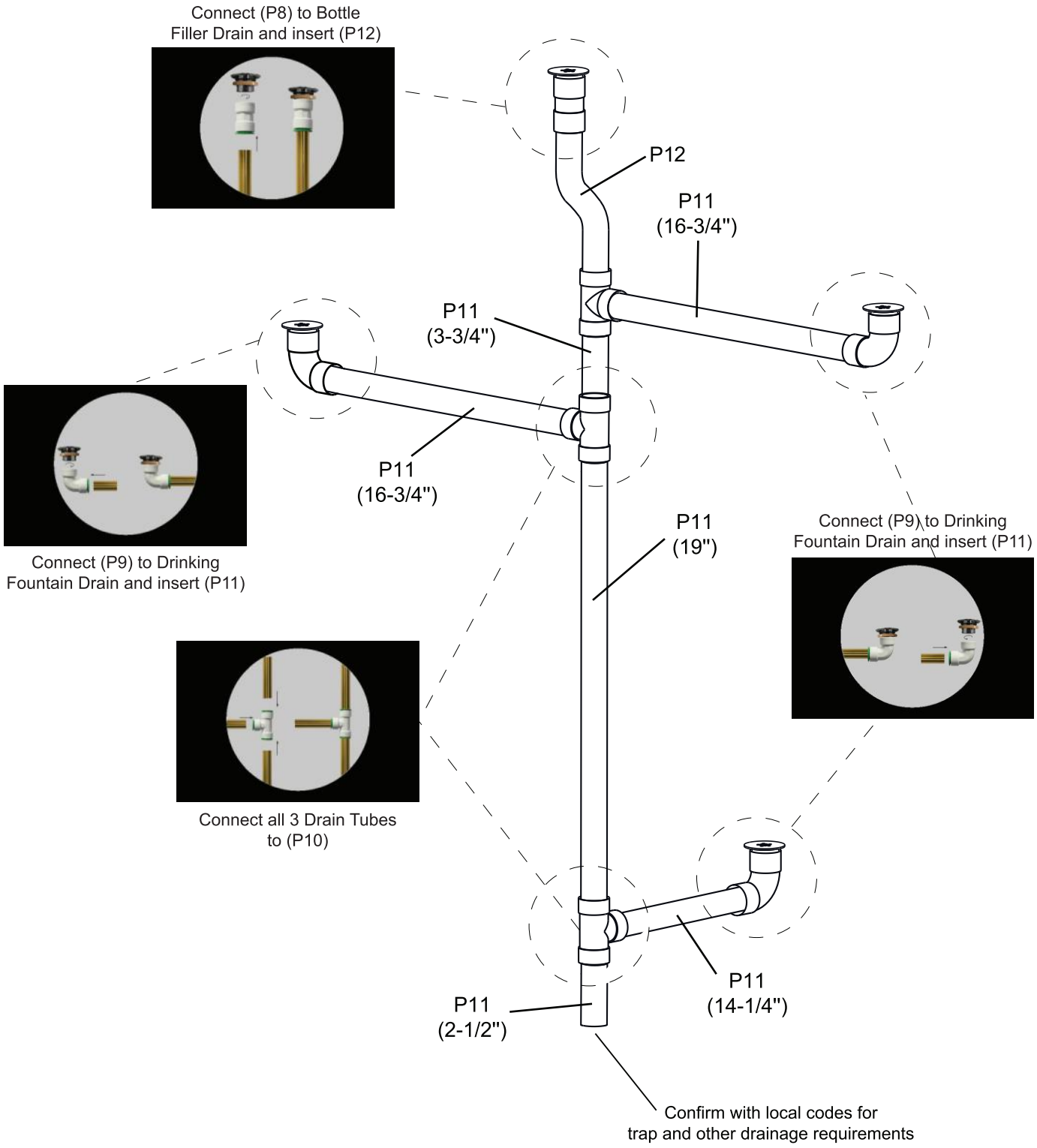

WATER DRAIN LINE CONNECTION BREAKDOWN:

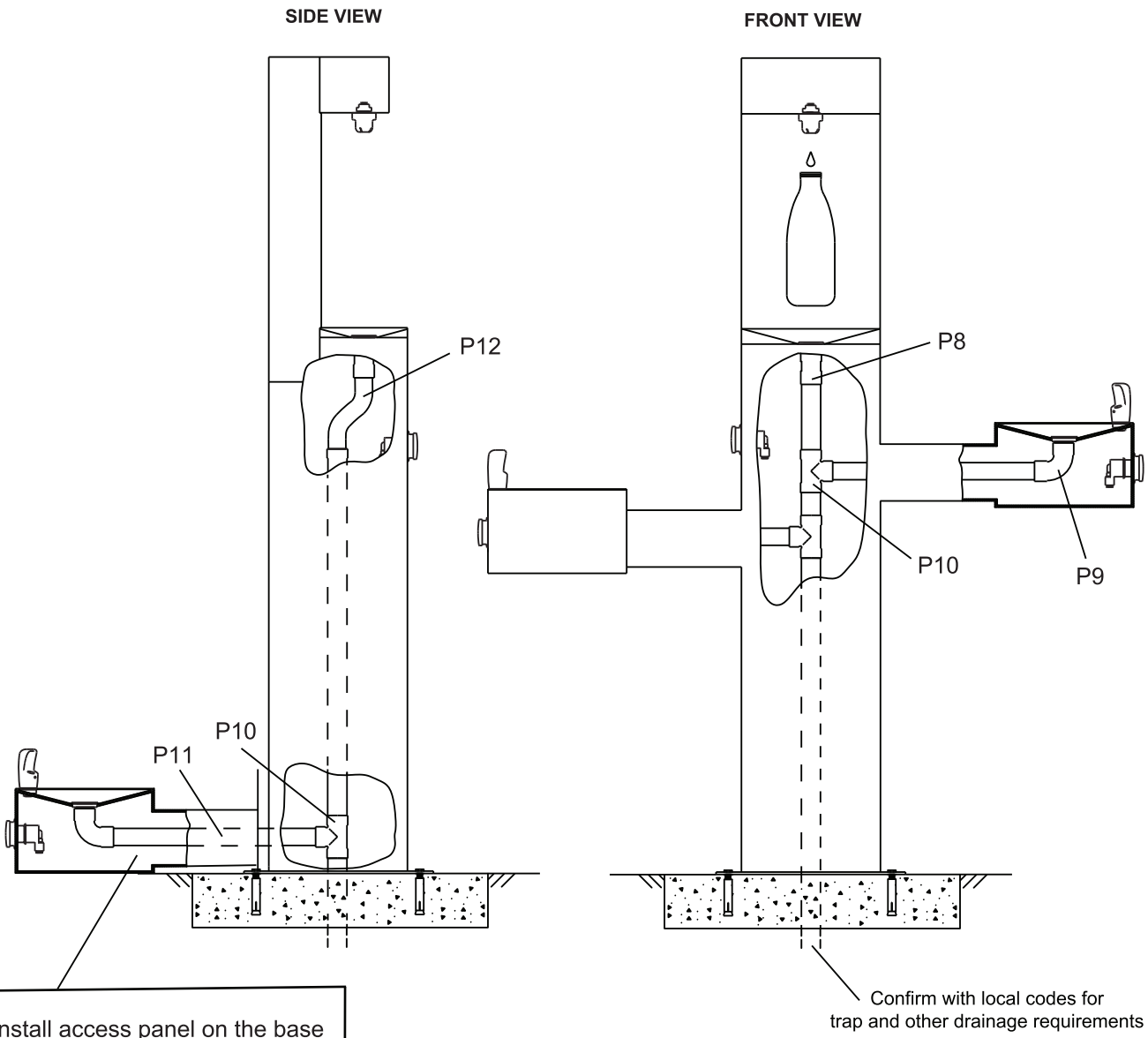

Reinstall access panel on the base of the pet station pan BEFORE connecting (P11) Drain Tube to (P10) T-Shape Drain Connector; using (8) M6 x 10 flat-head anti-theft screws preciously removed.

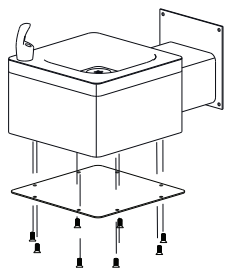

Note: Turn on water supply and check all connections for leaks and proper operation.

Reinstall the remaining (4) access panels using the (32) M6 x 10 flat-head anti-theft screws preciously removed from the fountain.

WARNING: Flush all water supply lines thoroughly before initial use.

8. ATTACH PET STATION TO PEDESTAL

Using provided torx key wrench (H1) or torx drill bit (H2), attach the pet station to the pedestal using H8 (x4) M6 flat head screws.

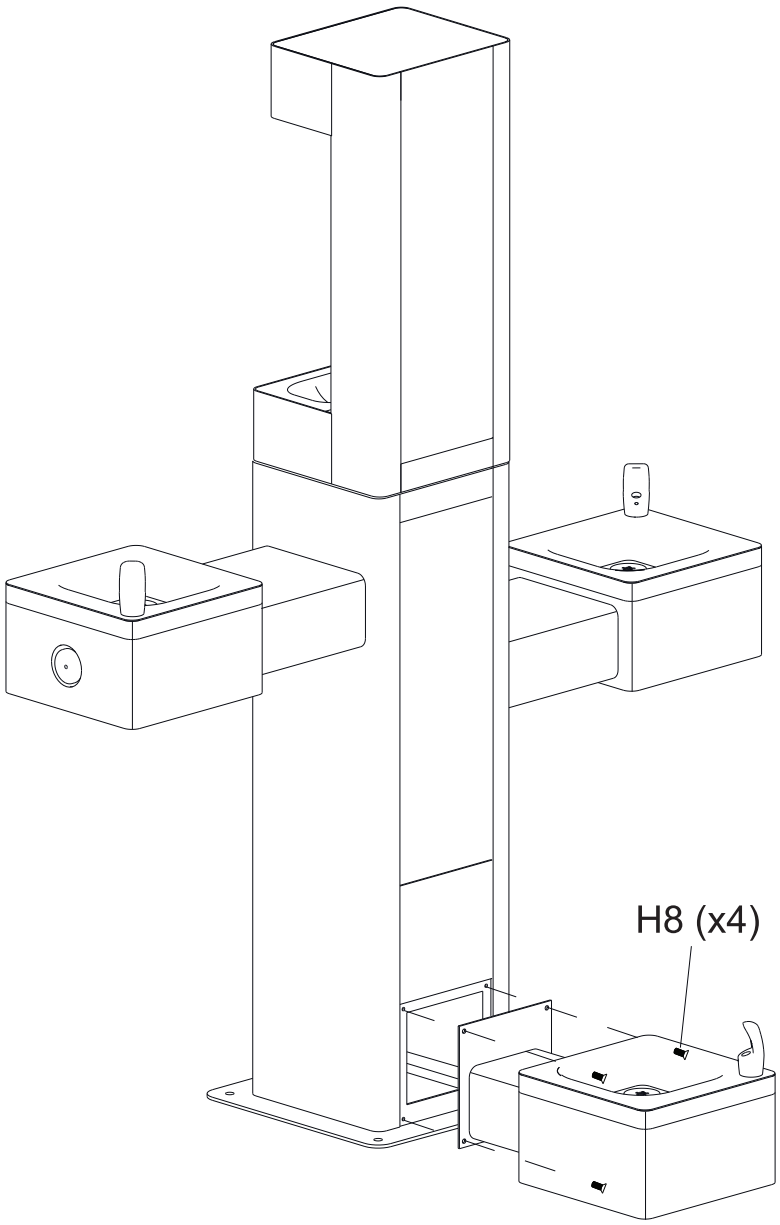

START-UP

Initial water flow may have sputter due to air in the water lines; this will be eliminated once air is purged from all water lines. Press and hold the push button until a steady water stream is achieved.

STREAM HEIGHT ADJUSTMENT

To adjust the water stream height, insert a small flathead screwdriver through the access hole in the center of the push button and turn the adjustment screw. Turn clockwise to raise the stream height and counterclockwise to lower the stream height. For best adjustment, the stream should be approximately 1-1/2" above the top of the bubbler, (see FIG.3).

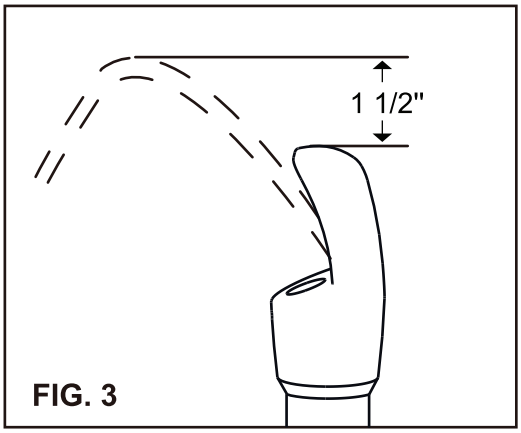

FIG. 3

CAUTION: The fountain is rated for inlet water pressure of 20-105 PSI. A pressure reducing regulator should be used if the inlet water supply exceeds 105 PSI. Any damage caused by reason of connecting this product to supply line pressures lower than 20 PSI or higher than 105 PSI will void warranty.

DRAINING AND WINTERIZATION

- Before freezing temperatures occur, turn off the water at the shut-off valve, disconnect the water supply line tubing and blow out lines. Press down on push button to release any air pressure that may remain in the lines.
- Remove trap before winterization draining.
- DO NOT allow water lines to freeze. Cracked or broken components due to freezing are not covered by warranty.