GLOBAL INDUSTRIAL™

We can supply that.

User's manual	Manual del usuario	Manuel de l'utilisateur
Customer Service US: 1-800-645-2986	Servicio de atención al Cliente US: 1-800-645-2986	Service à la clientèle Canada: 888-645-2986

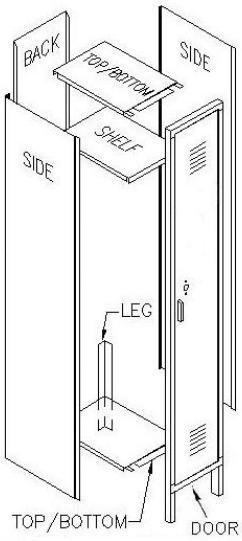

Before Assembly

Please read the complete instructions.

Check for missing or damaged parts.

Only use the specified hardware.

CAUTION: Some parts have sharp edges and corners, wear gloves during assembly.

Assembly will require the following tools:

- 2 drift pins (or 2 nail punches) for hole alignment
- 3/8" socket wrench

Lockers should be assembled on a flat, level surface and anchored according to the instructions found in Section 7 & 9.

Two people are required to remove the side panels from the packaging, with one person at each end

Three Wide Locker Assembly



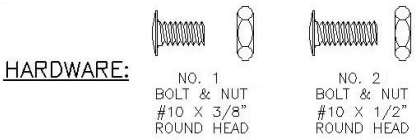

Locker Assembly

1. Bolt together top and bottom with bends facing down and the back with the bends facing up. Top and bottom are identical. For single and double-tier models, bolt hook to back.

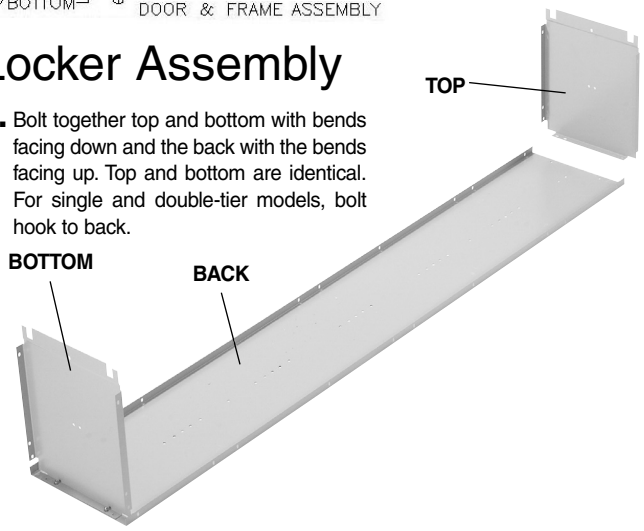

2. Bolt on side with bend in rear and facing in. Omit 2 bolts near bottom rear for legs. Install shelf by bolting to side with bend facing down and 45° bend in front. (See Section 8 Punching Patterns for single, double and 6-tier shelf hole locations.)

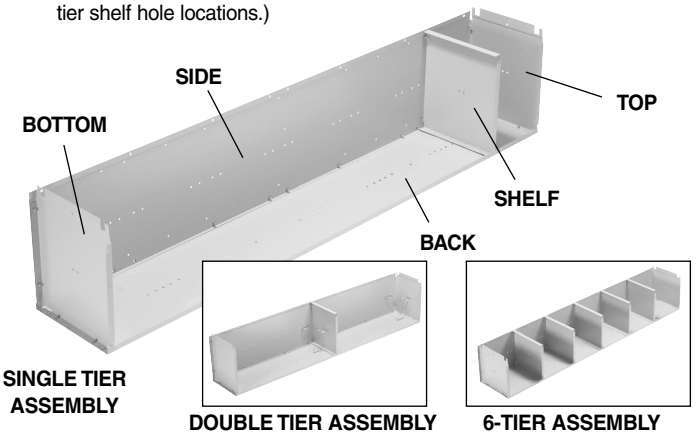

3. Bolt together tops, bottoms, shelves, and backs with a side in between.

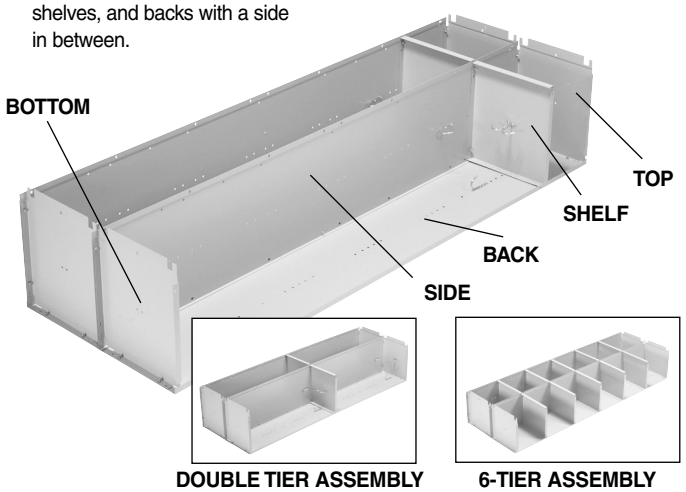

4. Repeat step 3 until bank of lockers is complete. Bolt on side

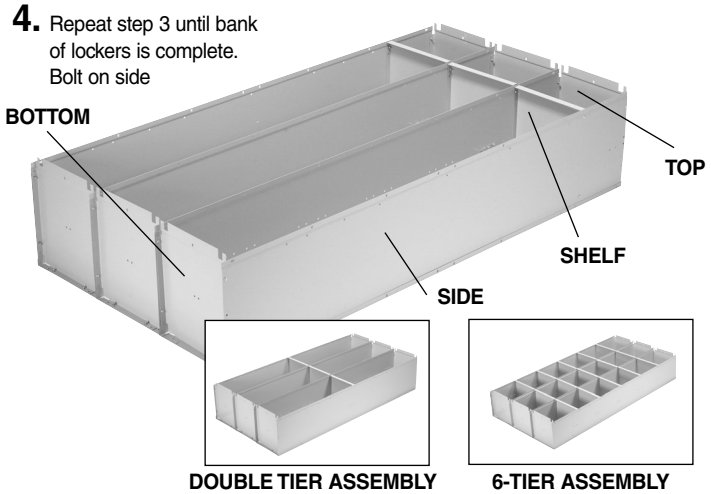

Three Wide Locker Assembly

5. Bolt on hooks and/or coat rod

- 18" deep, single-tier lockers include both a coat rod and back and side hooks
- 12" and 15" deep single and double-tier lockers include back, side and top double prong hooks
- Six-tier models do not include coat rods or hooks

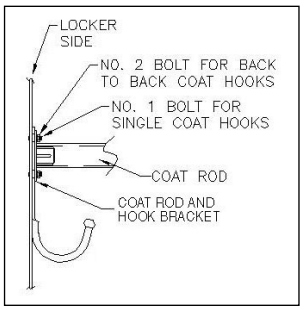

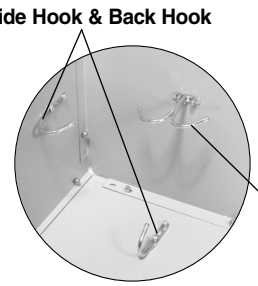

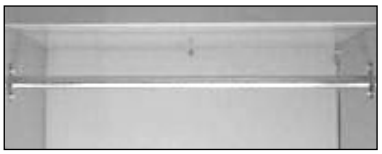

Coat Rod

6. Insert rear legs in each end of locker. Bolt each leg in two places. Rear legs must be a maximum of 36" apart. Attach additional legs as required.

Attach Door Frame Assembly. Leave top, center and bottom bolts out if attaching to additional lockers.

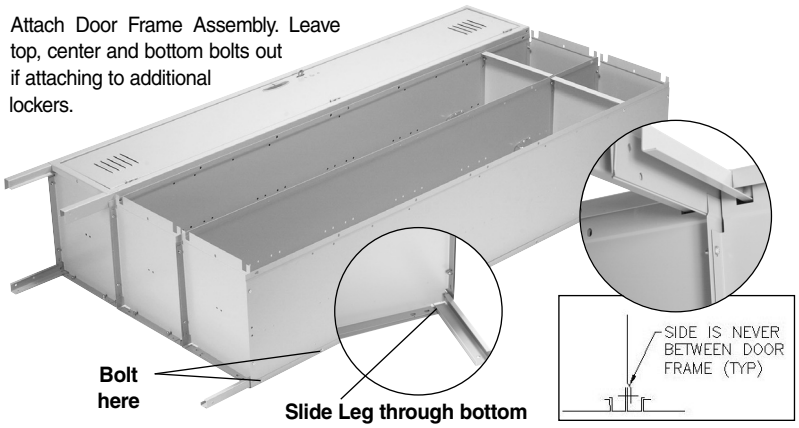

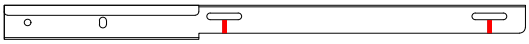

Install bolt and nut at the red-lined locations only if the floor is even.

7. Bolt locker foot to leg. Stand locker in place. Level them and adjust rear legs to touch floor and tighten bolts. Floor anchor not included. Bolt banks of lockers together using holes omitted in step #5.

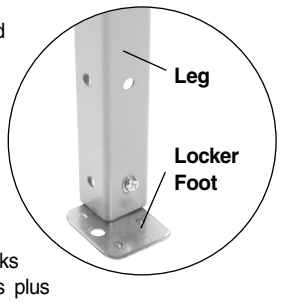

Anchor individual lockers using locker foot on all four legs. For banks of lockers, anchor extreme ends plus intermediate lockers on 36" centers maximum.

WARNING:
–FLOOR ANCHOR MUST HAVE A MINIMUM PULL-OUT VALUE OF 190 LBS.
–WALL ANCHOR MUST HAVE A MINIMUM PULL-OUT VALUE OF 150 LBS.

8. Punching Patterns

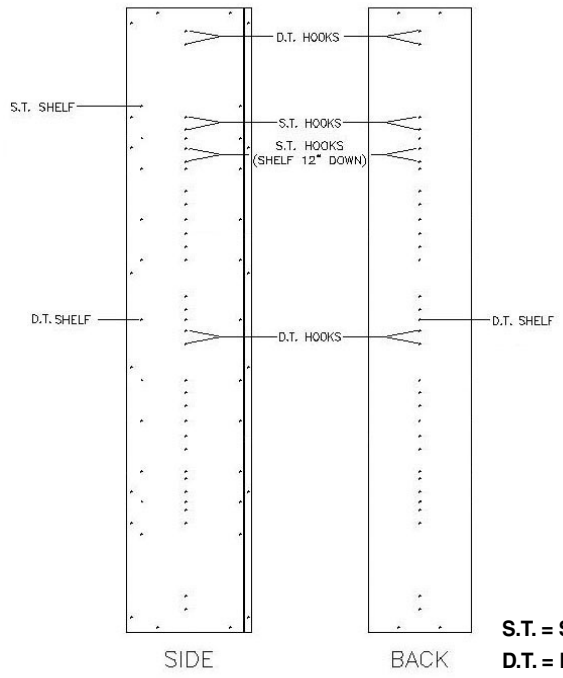

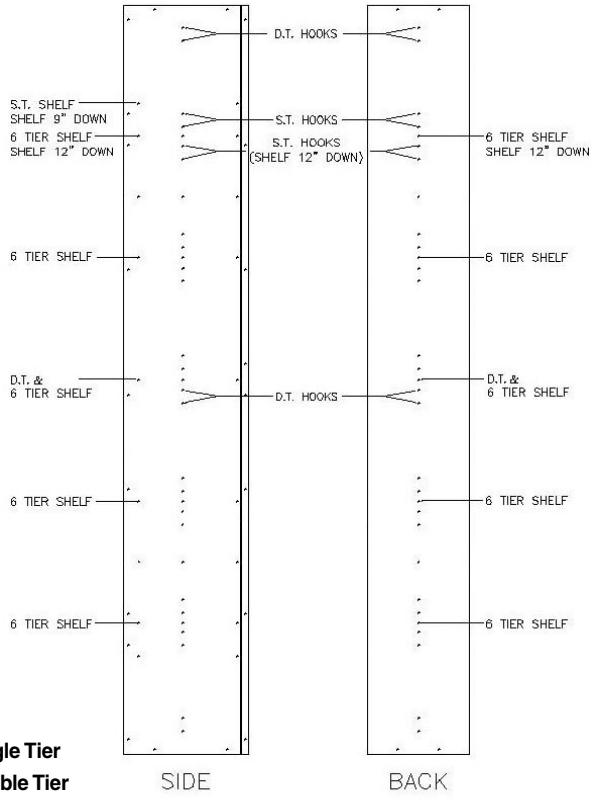

S.T. = Single Tier
D.T. = Double Tier

60" Sides & Backs

72" Sides & Backs

Three Wide Locker Assembly

FREE STANDING SINGLE ROW

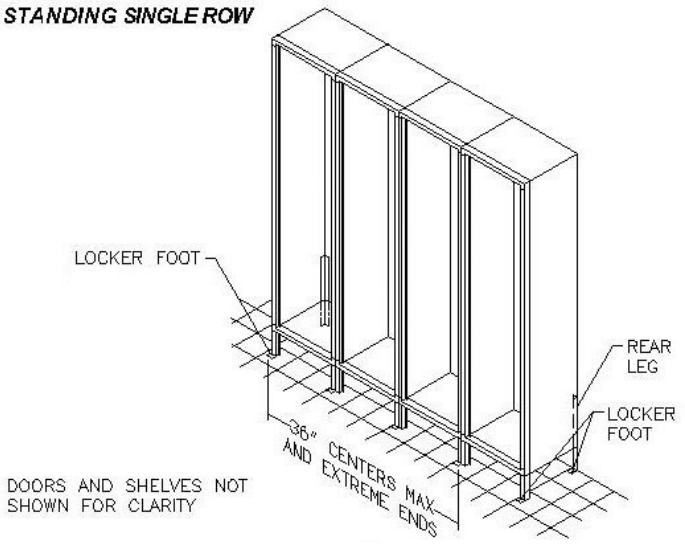

SINGLE ROW LOCKERS AGAINST A WALL

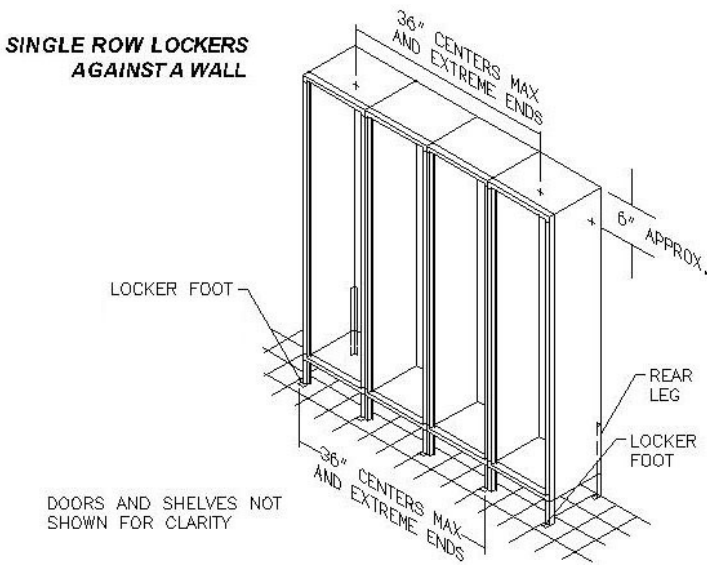

FREE STANDING DOUBLE ROW LOCKERS

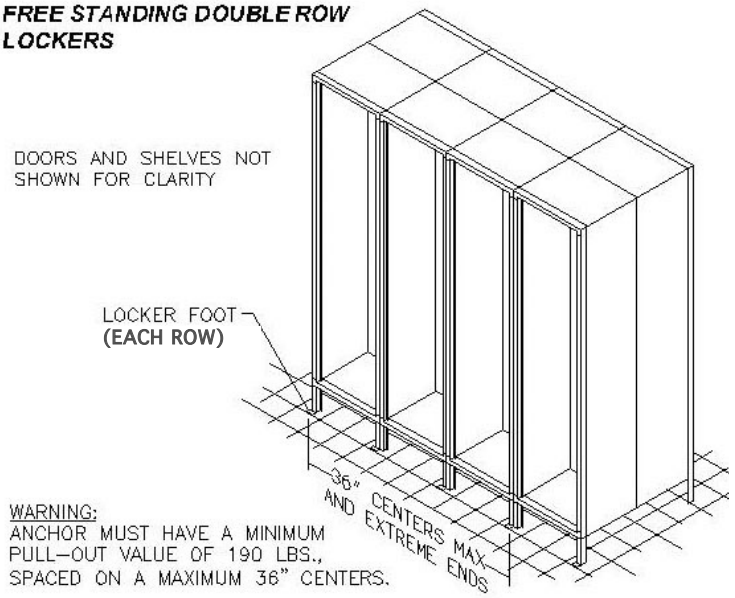

WARNING:
ANCHOR MUST HAVE A MINIMUM PULL–OUT VALUE OF 190 LBS., SPACED ON A MAXIMUM 36" CENTERS.