Fusion

Product Specifications

ITEM NO: _____
PROJECT: _____
DATE: _____

Refrigerated Self-Service Single Deck Case

Lengths include 1-1/8" end panels

☐ GLDSS4R	51"L x 47-7/8"D x 35"H
☐ GLDSS5R	62-7/8"L x 47-7/8"D x 35"H
☐ GLDSS6R	75-3/8"L x 47-7/8"D x 35"H
☐ GLDSS8R	99-3/4"L x 47-7/8"D x 35"H

MODEL SHOWN GLDSS4R

NOTE: SHOWN W/ OPTIONAL CUTAWAY END PANEL

STANDARD FEATURES

- Breeze w/EnergyWise s/c refrigeration
- Compressor air intake from rear and out front panel at toe kick. Front panel cannot be blocked.
- Corrosion resistant stainless steel tub & fan shroud
- Integrated average product temperature of 40°F or less
- One year parts & labor; 5 year compressor warranty

Features	Standard	Options
EXTERIOR COLOR	☐ Laminated (non-premium) Confirm pattern/grain direction	☐ Laminated (premium) Confirm pattern/grain direction ☐ Painted (stock colors, specify RAL#) ☐ Stainless steel
INTERIOR COLOR	☐ Black	☐ Stainless steel
REAR EXTERIOR COLOR	☐ Stainless steel	☐ Painted - Black ☐ Painted - White
BASE	☐ Casters w/ levelers (n/a w/ remote ref.)	☐ 6"H legs (n/a w/ remote ref.)
END PANEL LEFT	☐ Full end panel w/mirror interior	☐ Cutaway w/acrylic end panel ☐ No end panel w/ synchronized defrost
END PANEL RIGHT	☐ Full end panel w/mirror interior	☐ Cutaway w/acrylic end panel ☐ No end panel w/ synchronized defrost
LOWER FRONT PANEL	☐ Painted - Black	☐ Stainless steel
UPPER REAR LEDGE	☐ Black Sanalite®	☐ Solid surface (specify color) ☐ Stainless steel ☐ White Sanalite®
ELECTRICAL CONNECT	☐ 6' Straight blade power cord (self-cont.)	☐ 6' Locking power cord (self-cont.) ☐ Electrical leads (remote)
REFRIGERATION	☐ Breeze w/EnergyWise s/c refrigeration	☐ NOTE: Remote only available w/rail base w/shims. N/A w/ levelers, casters or legs. ☐ Note: Remote doesn't incl Conds unit. Floor drain reqd. ☐ Remote w/thermostat, solenoid & TXV
MISCELLANEOUS		☐ Refrigerated rear storage (remote only) w/ sneeze guard ☐ Second year parts & labor warranty (excludes compressor)
ACCESSORIES		☐ 2"H Full depth display riser(s) ☐ Clean Sweep® coil cleaner (n/a w/remote)

Structural Concepts®
888 E. Porter Rd.
Muskegon, MI 49441
Ph. 231-798-8888
Fx. 231-798-4960
www.structuralconcepts.com

Note: Information is subject to change at any time.
Visit www.structuralconcepts.com for the most current specs.

Revised 7/6/2020 20029600

Fusion

Product Specifications

Intended Environment:	Type I - Designed to operate in ambient conditions of 75°F with 55% relative humidity unless noted otherwise in system information below.	
Zone	**Intended Product To Be Displayed**	**Warmest Avg Prod Temp ° F**
1	Packaged refrigerated products	40

PLAN VIEW

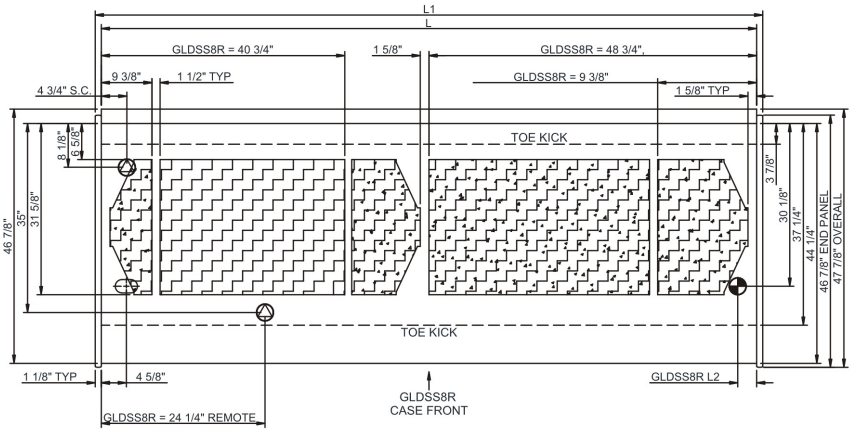

SIDE VIEW

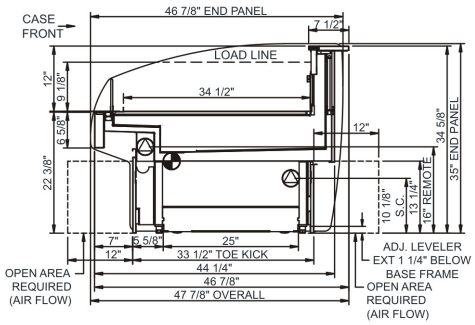

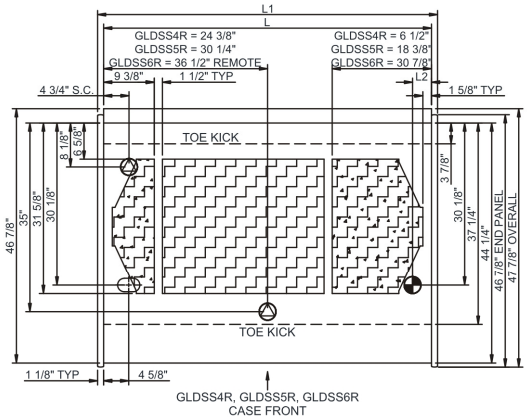

NOTE: ALL DIMENSIONS APPROXIMATE

- ELECTRICAL JUNCTION BOX (SUPPLIED WITH 6" LEADS OR POWER CORD).
- LOCATION OF DRAIN TUBE FOR REMOTE REF. ONLY (SUPPLIED WITH $\frac{3}{4}$" OR $1\frac{1}{2}$" PVC TUBE).
- REFRIGERATION LINE CONNECTION.
- REMOTE FLOOR SINK & UTILITIES ACCESS AREA.
- SELF-CONTAINED CASE SERVICE ACCESS AREA.
- DRY CASE SERVICE ACCESS AREA.

Model Technical Specifications

Model	L"	L1"	L2"	System Circuit Volts			Phs	Freq	Amps ***	Watts	Wires	NEMA Plug	SST	Conv. Rack BTUH	Para. Rack BTUH	Est Wt
GLDSS4R	48.75	51.00	3.50	Optional Skirt Light	Circuit #1	110-120	1	60	0.70	6	2+G	Leads Multiple	N/A	N/A	N/A	700
				Remote(Type I)	Circuit #1	110-120	1	60	0.48	36	2+G	Leads Multiple	20.00	2333	2160	
				Self-Contained	Circuit #1	110-120	1	60	12.00	1,016	2+G	5-20P or L5-20P	N/A	N/A	N/A	
GLDSS5R	60.63	62.88	3.50	Optional Skirt Light	Circuit #1	110-120	1	60	0.70	8	2+G	Leads Multiple	N/A	N/A	N/A	950
				Remote(Type I)	Circuit #1	110-120	1	60	0.71	42	2+G	Leads Multiple	20.00	3020	2796	
				Self-Contained	Circuit #1	110-120	1	60	15.07	1,385	2+G	5-20P or L5-20P	N/A	N/A	N/A	
GLDSS6R	73.13	75.38	3.50	Optional Skirt Light	Circuit #1	110-120	1	60	0.70	10	2+G	Leads Multiple	N/A	N/A	N/A	1,000
				Remote(Type I)	Circuit #1	110-120	1	60	0.89	63	2+G	Leads Multiple	20.00	3499	3240	
				Self-Contained	Circuit #1	110-120	1	60	15.25	1,405	2+G	5-20P or L5-20P	N/A	N/A	N/A	
GLDSS8R	97.50	99.75	3.50	Optional Skirt Light	Circuit #1	110-120	1	60	0.70	13	2+G	Leads Multiple	N/A	N/A	N/A	1,100
				Remote(Type I)	Circuit #1	110-120	1	60	1.33	115	2+G	Leads Multiple	20.00	4709	4360	
				Self-Contained	Circuit #1	110-120	1	60	15.69	1,458	2+G	5-20P or L5-20P	N/A	N/A	N/A	

*** Does not include electric defrost on freezer models.

Regulatory Approvals:	
All Models	Accordance with AHRI Std 1200 ETL Listed to UL 471 ETL Listed to CAN/CSA 22.2 No. 120 ETL Sanitation to NSF 7

In Accordance with AHRI Std 1200

DOE 2017 Energy Efficiency Compliant

Important Notes:

1) ELECTRICAL NOTE: If GFCI is required, a GFCI breaker MUST be used in lieu of a GFCI receptacle
2) Units are supplied with levelers. They must be adjusted during installation to ensure units is level and plumb. Dimensions reflect levelers extended 1 1/4".

⚠ **WARNING:** This product can expose you to chemicals, including Urethane (Ethyl Carbamate), which are known to the State of California to cause cancer and birth defects or other reproductive harm. For more information go to www.P65Warnings.ca.gov.

Structural Concepts®
888 E. Porter Rd.
Muskegon, MI 49441
Ph. 231-798-8888
Fx. 231-798-4960
www.structuralconcepts.com

Note: Information is subject to change at any time.
Visit www.structuralconcepts.com for the most current specs.

Revised 7/6/2020 20029600