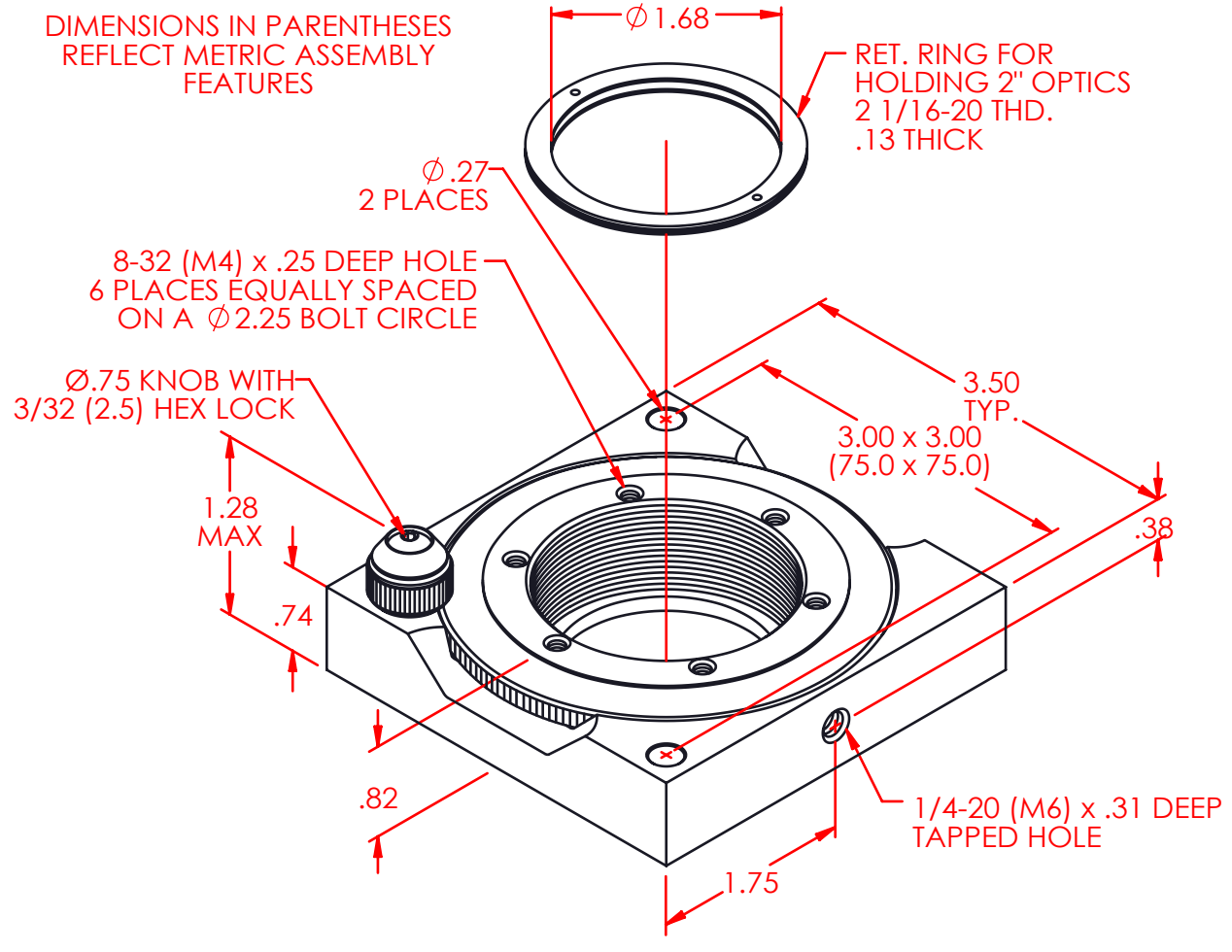
DIMENSIONS IN PARENTHESES
REFLECT METRIC ASSEMBLY
FEATURES
∅1.68
RET. RING FOR
HOLDING 2" OPTICS
2 1/16-20 THD.
.13 THICK
∅.27
2 PLACES
8-32 (M4) x .25 DEEP HOLE
6 PLACES EQUALLY SPACED
ON A ∅2.25 BOLT CIRCLE
Ø.75 KNOB WITH
3/32 (2.5) HEX LOCK
3.50
TYP.
3.00 x 3.00
(75.0 x 75.0)
1.28
MAX
.74
.38
.82
1/4-20 (M6) x .31 DEEP
TAPPED HOLE
1.75