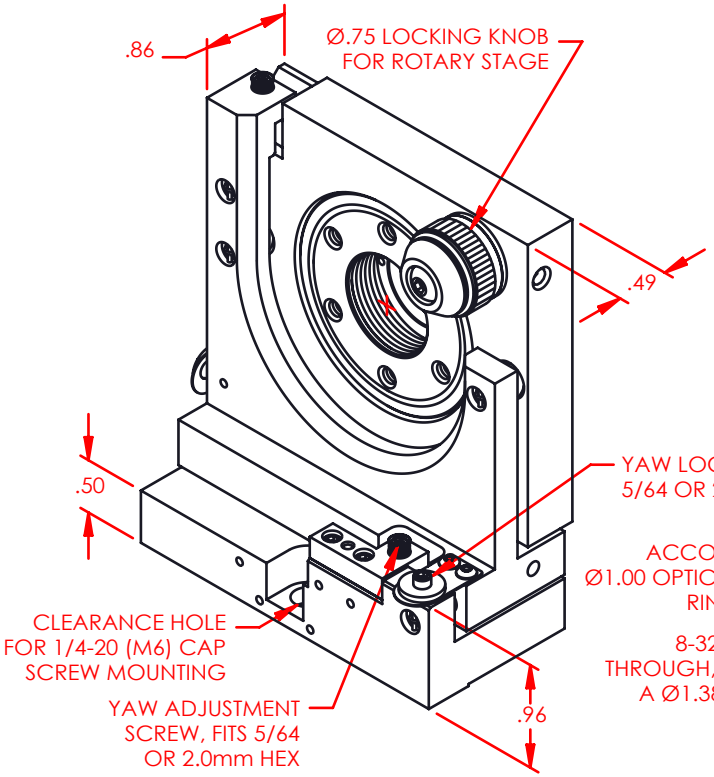

DIMENSIONS IN PARENTHESES REFLECT METRIC ASSEMBLY FEATURES

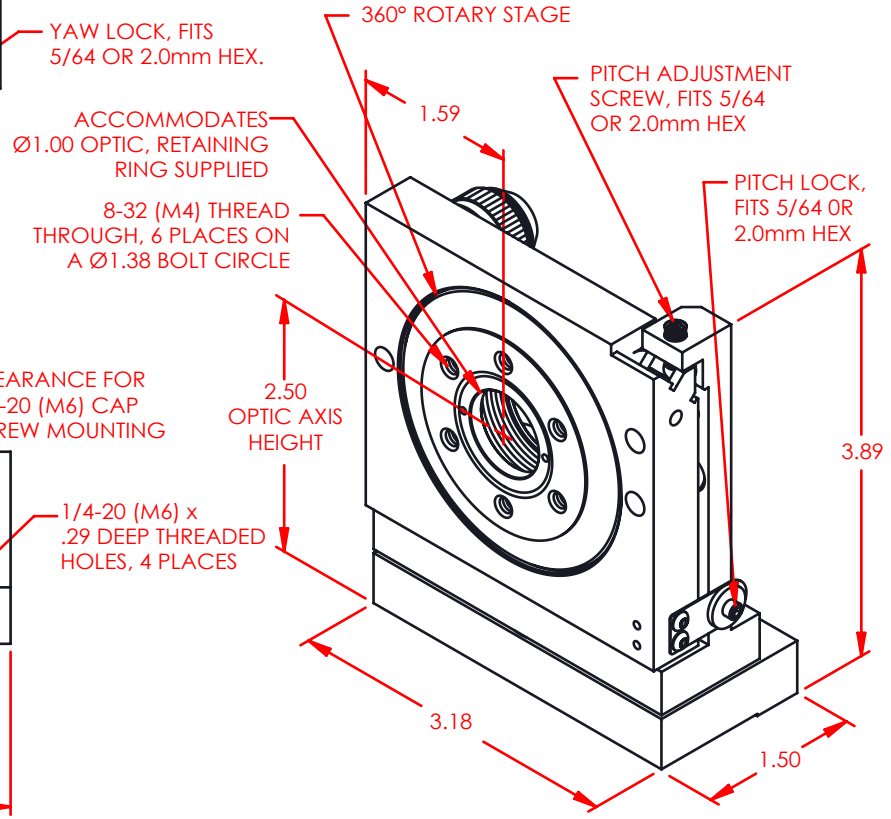

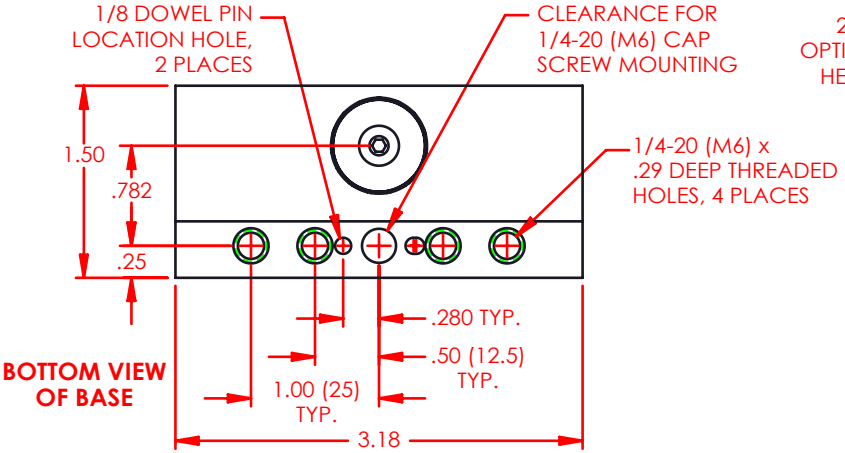

BOTTOM VIEW OF BASE