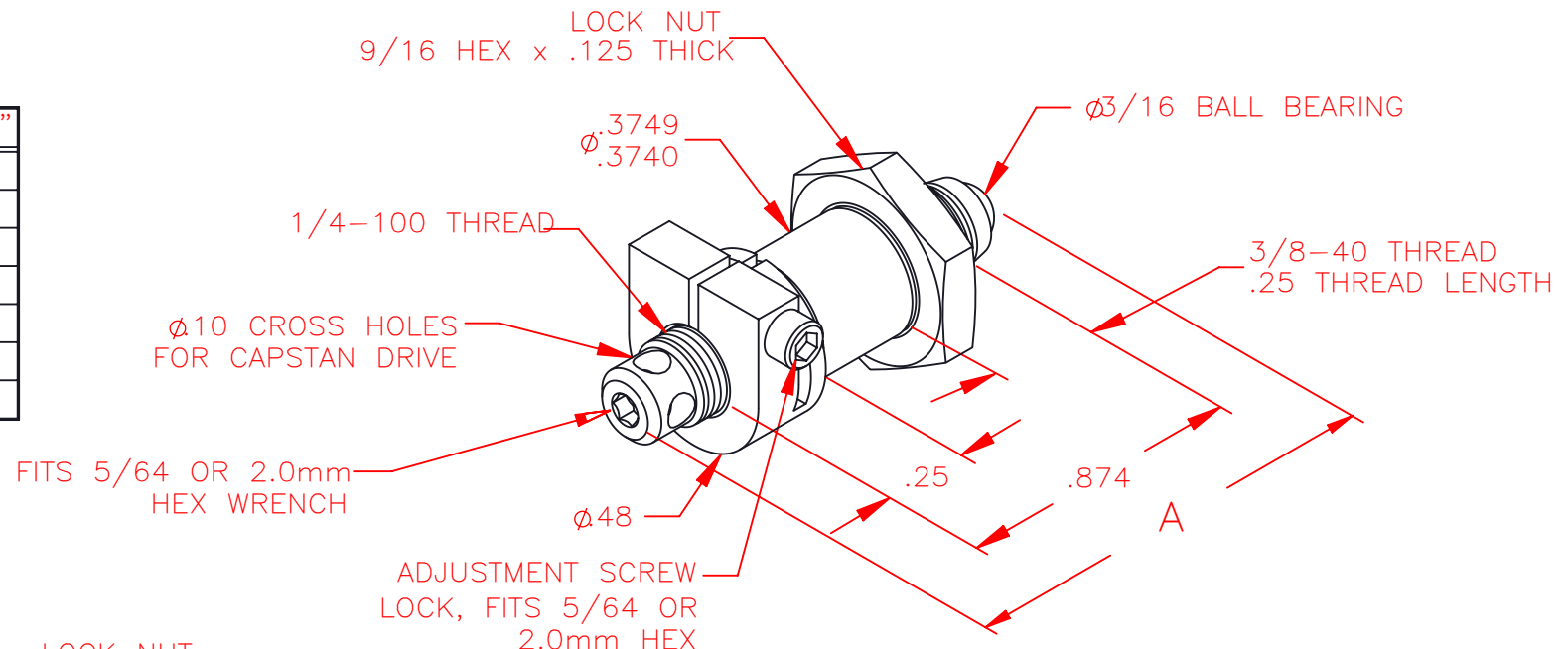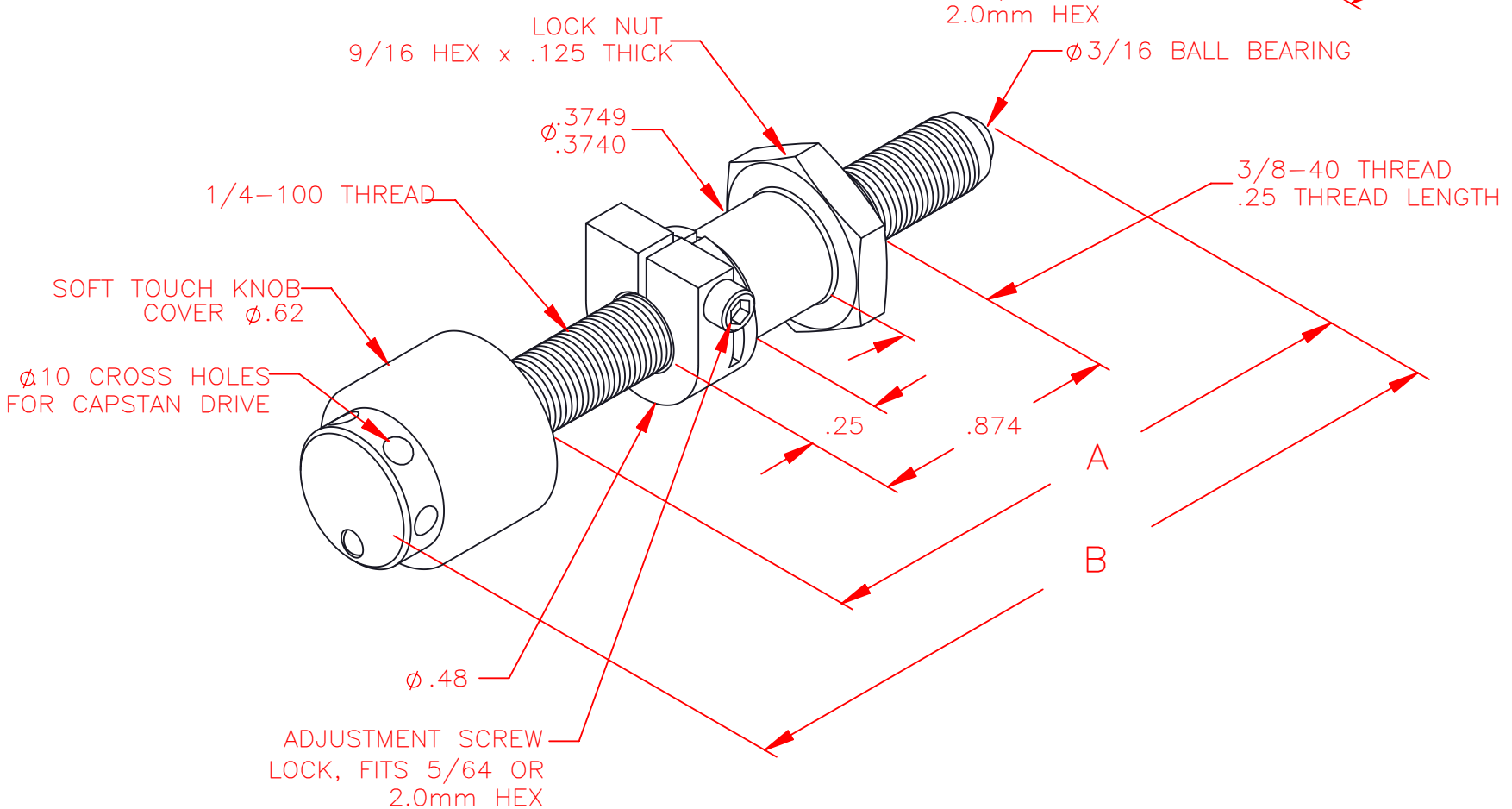PART NAME	DIM "A"	DIM "B"
100TPI–0.5	1.46	2.00
100TPI–1.0	2.13	2.66
100TPI–2.0	3.13	3.66
100TPI–4.0	5.25	5.79
100TPI–0.2H	1.37	N/A
100TPI–0.5H	1.62	N/A
100TPI–1.0H	2.28	N/A