REVISION HISTORY					
REV	SHT	DESCRIPTION	DATE	ECN	CHECKED
A	ALL	RELEASE NEW	4/22/08	NEW	JFM

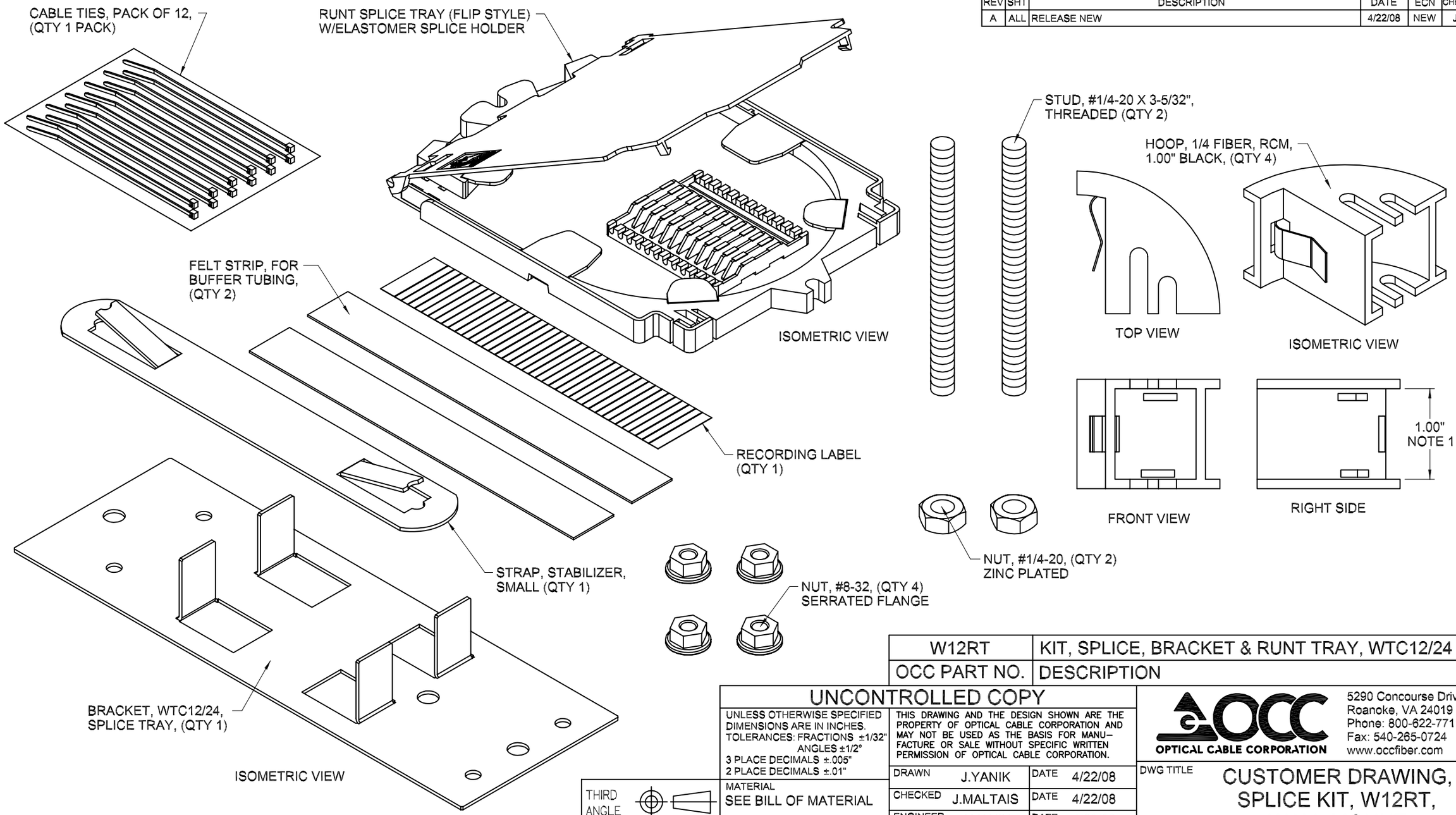

NOTES: UNLESS OTHERWISE SPECIFIED.
1. DRUM HEIGHT IS MEASURED INSIDE OF FLANGES.

W12RT	KIT, SPLICE, BRACKET & RUNT TRAY, WTC12/24
OCC PART NO.	DESCRIPTION

UNCONTROLLED COPY

UNLESS OTHERWISE SPECIFIED DIMENSIONS ARE IN INCHES.
TOLERANCES: FRACTIONS ±1/32"
ANGLES ±1/2°
3 PLACE DECIMALS ±.005"
2 PLACE DECIMALS ±.01"

THIS DRAWING AND THE DESIGN SHOWN ARE THE PROPERTY OF OPTICAL CABLE CORPORATION AND MAY NOT BE USED AS THE BASIS FOR MANU–FACTURE OR SALE WITHOUT SPECIFIC WRITTEN PERMISSION OF OPTICAL CABLE CORPORATION.

OPTICAL CABLE CORPORATION
5290 Concourse Drive
Roanoke, VA 24019
Phone: 800-622-7711
Fax: 540-265-0724
www.occfiber.com

THIRD ANGLE PROJECTION

MATERIAL: SEE BILL OF MATERIAL

FINISH: SEE NOTES

CRITICAL DIMENSION CODE
(F) = FUNCTION
(M) = MATING
(A) = AUDIT

DRAWN	J.YANIK	DATE	4/22/08
CHECKED	J.MALTAIS	DATE	4/22/08
ENGINEER	J.YANIK	DATE	4/22/08
APPROVED	R.B.SMITH	DATE	5/20/08
PREVIOUS DWG			
NEXT DWG		FILENAME	C108765A.DFT

DWG TITLE: CUSTOMER DRAWING, SPLICE KIT, W12RT, WALL MOUNT

SIZE	DWG NO.	REV
B	C108765	A

SCALE: NONE SHEET 1 OF 1