Datasheet

iSFP-10G-LR-FL

10G, SFP+, Duplex LC, 1310nm, SMF, 10km, COM

Quick Spec

Rate Category:	10G
Form Factor:	SFP+
Interface Type:	10GBASE-LR
Standard/Protocol:	IEEE 802.3ae 10GBASE-LR
TX Wavelength:	1310nm
RX Wavelength:	1260-1580nm
Cable Type:	SMF (G.652)
Reach:	10km (SMF)
DDM:	Supported
Connector Type:	Duplex LC (UPC)
Power Consumption:	< 1.0 W
Operating Temperature:	0°C to +70°C (COM)

Overview

The FluxLight iSFP-10G-LR-FL is a high-performance, cost-effective 10G optical transceiver module designed for 10 Gigabit Ethernet links up to 10 km over single-mode fiber. Internally, the module integrates a 1310 nm DFB laser transmitter, a PIN photodiode paired with a trans-impedance amplifier (TIA), and an MCU control unit. Fully compliant with the SFP+ Multi-Source Agreement (MSA), SFF-8472 digital diagnostic monitoring (DDM/DOM), and Class 1 laser safety standards, it delivers reliable, low-power optical connectivity up to 10 km over G.652 single-mode fiber.

Features

- Hot-pluggable SFP+ footprint with duplex LC receptacle
- Supports 1.25 to 11.3 Gbps line rates; compliant with IEEE 802.3ae 10GBASE-LR
- 1310 nm DFB laser transmitter and PIN photodiode receiver
- Up to 10 km over G.652 single-mode fiber
- Average launch power −8.2 to +0.5 dBm; receiver sensitivity better than −14.4 dBm
- Real-time Digital Diagnostic Monitoring (DDM/DOM) via 2-wire serial interface per SFF-8472
- Single +3.3V power supply with ultra-low power dissipation (< 1.0 W)
- Operating case temperature: 0°C to +70°C (COM)
- SFP+ MSA (SFF-8431) compliant, RoHS-6 compliant, and Class 1 laser eye safety certified (IEC/EN 60825-1)
- 100% compatible with and programmed for the target OEM platform
- Backed by a FluxLight lifetime warranty

Applications

- 10 Gigabit Ethernet over single-mode fiber
- Switch and router uplinks, campus backbone and inter-building links up to 10 km
- 10G SONET/SDH (OC-192 / STM-64)
- OTN transport (OTU1e / OTU2e)

Absolute Maximum Rating

The operation in excess of any absolute maximum ratings might cause permanent damage to this module.

Parameter	Symbol	Min	Max	Unit
Storage Temperature	TS	-40	85	°C
Operating Case Temperature	TOP	0	70	°C
Power Supply Voltage	VCC	-0.3	3.6	V
Relative Humidity (non-condensation)	RH	5	85	%

Recommended Operating Conditions

Parameter	Symbol	Min	Typical	Max	Unit
Operating Case Temperature	TOP	0		70	°C
Power Supply Voltage	VCC	3.135	3.3	3.465	V
Power Consumption				1	W
Data Rate	DR		10.3125		Gbps
Link Distance with SMF	D			10	km

Electrical and Optical Characteristics

Parameter	Symbol	Min	Typical	Max	Unit	Notes
Transmitter						
Support data rate		1.25		11.3	Gb/s	
Center Wavelength		1260	1310	1355	nm	
Spectral Width (-20dB)				1	nm	
Side Mode Suppression Ratio	SMSR	30			dB	
Average Optical Output Power	Po	-8.2		0.5	dBm	
Optical Modulation Amplitude	POMA	-5.2			dBm	
Extinction Ratio	Er	3.5			dB	
Transmitter and dispersion penalty	TDP			3.2	dB	
Output Power with Transmitter Disabled	Poff			-30	dBm	
Transmitter Enable Voltage	VEN	-0.3		0.8	V	
Transmitter Disable Voltage	VD	2.0		Vcc+0.3	V	
Differential Data Input Swing	VINpp	100		1000	mV	
Rise/fall time (20%-80%)	Tr/Tf			50	ps	
RIN12OMA	RIN12			-128	dB/Hz	
Optical return loss tolerance				12	dB	
Output Eye Diagram	Compliant with IEEE 802.3					1
Receiver						
Support data rate		1.25	10.3125	11.3	Gb/s	
Operate Wavelength		1260		1580	nm	
Receiver sensitivity (BER of 1E-12) @10.3125Gb/s	Sen1			-14.4	dBm	2
Saturation (BER of 1E-12)	Psat	0.5			dBm	2
LOS Assert	LOSA	-30			dBm	
LOS De-Assert	LOSD			-16	dBm	
LOS Hysteresis	LOSH	0.5		5.0	dB	
Differential Data Output Swing	VOUTPP	300		850	mV	
LOS Low Voltage	VLout			0.4	V	
LOS High Voltage	VHout	2.0			V	

1. At least 1000 waveforms acquired, with minimum 5% margin against the IEEE 802.3 mask.
2. Tested at 10.3125Gb/s, PRBS $2^{31}-1$, BER of 1×10^{-12}, NRZ, including back-to-back.

Recommended Interface Circuit

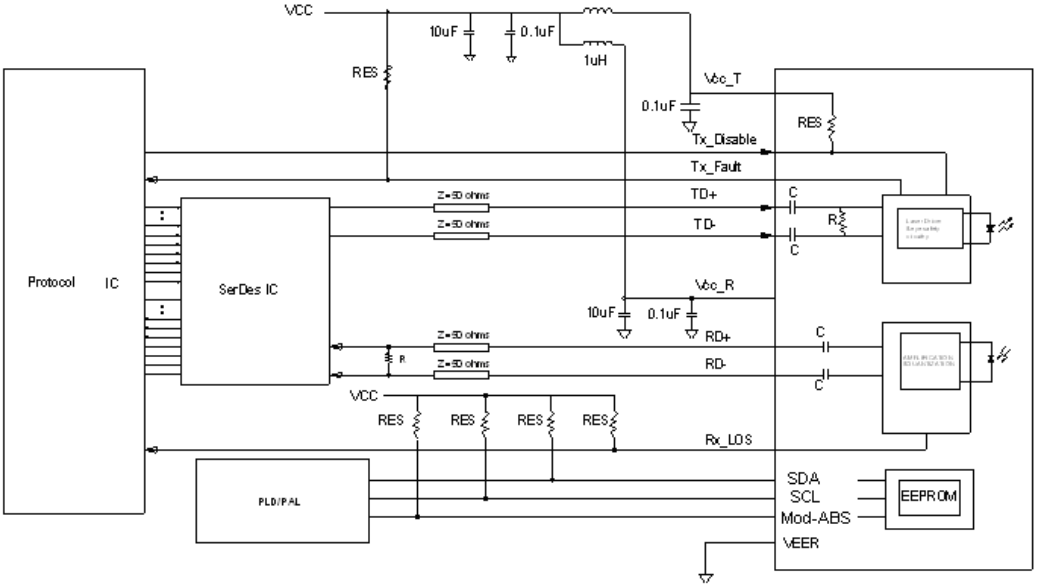

NOTE: 4.7K ohms<RES<10K ohms

Digital Diagnostic Functions

The following digital diagnostic characteristics are defined over the normal operating conditions unless otherwise specified.

Parameter	Symbol	Min	Max	Unit
Temperature monitor absolute error	DMI_Temp	-5	5	°C
Supply voltage monitor absolute error	DMI_VCC	-0.1	0.1	V
RX power monitor absolute error	DMI_RX	-3	3	dB
Bias current monitor absolute error	DMI_Ibias	-10%	10%	mA
TX power monitor absolute error	DMI_TX	-3	3	dB

Mechanical Dimensions

Units: mm

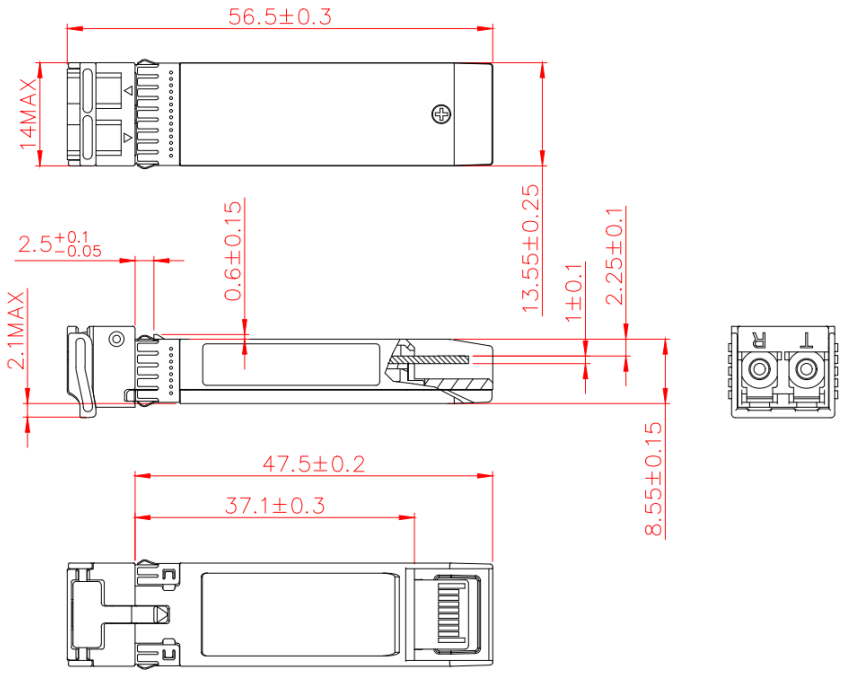

Pin Assignment and Description

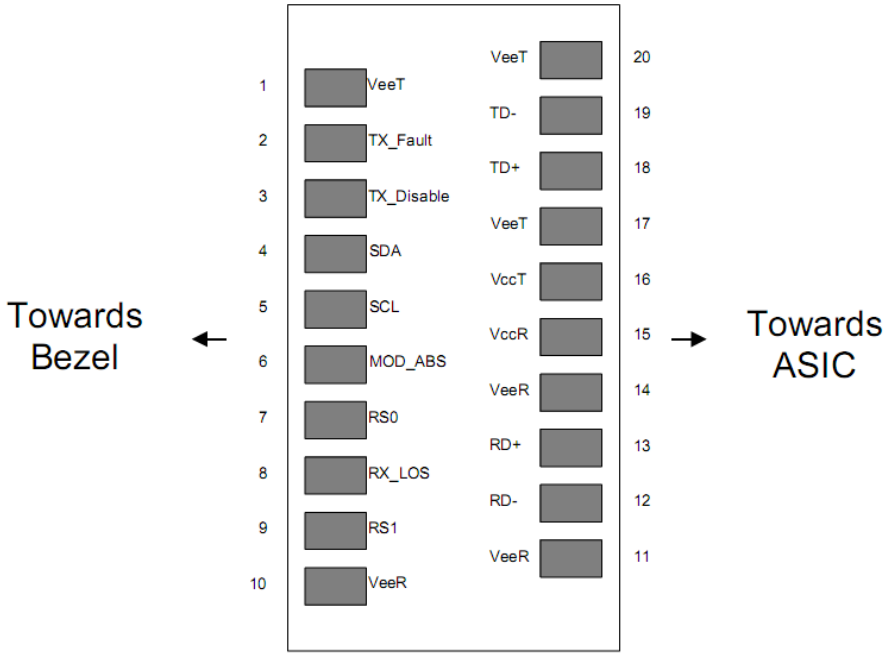

Pin	Signal Name	Description	Plug Seq.
1	VeeT	Transmitter Ground	1
2	TX FAULT	Transmitter Fault Indication	3
3	TX DISABLE	Transmitter Disable	3
4	SDA	SDA Serial Data Signal	3
5	SCL	SCL Serial Clock Signal	3
6	MOD_ABS	Module Absent. Grounded within the module	3
7	RS0	Not Connected	3
8	LOS	Loss of Signal	3
9	RS1	Not Connected	3
10	VeeR	Receiver ground	1
11	VeeR	Receiver ground	1
12	RD-	Inv. Received Data Out	3
13	RD+	Received Data Out	3
14	VeeR	Receiver ground	1
15	VCCR	Receiver Power Supply	2
16	VCCT	Transmitter Power Supply	2
17	VeeT	Transmitter Ground	1
18	TD+	Transmit Data In	3
19	TD-	Inv. Transmit Data In	3
20	VeeT	Transmitter Ground	1

ESD

This transceiver is specified as ESD threshold 1kV for high-speed data pins and 2kV for all other electrical input pins, tested per MIL-STD-883, Method 3015.4 /JESD22-A114-A (HBM). However, normal ESD precautions are still required during the handling of this module. This transceiver is shipped in ESD protective packaging. It should be removed from the packaging and handled only in an ESD protected environment.

Laser Safety

This is a Class 1 Laser Product according to IEC 60825-1:2007. This product complies with 21 CFR 1040.10 and 1040.11 except for deviations pursuant to Laser Notice No. 50, dated (June 24, 2007).