Datasheet

SFP-25G-MR-LR-FL

10G/25G, SFP28, Duplex LC, 10/25GBASE-LR, SMF, 10km, COM

Quick Spec

Rate Category:	25G
Supported Rate(s):	10G/25G
Cable Type:	SMF
Form Factor:	SFP28
Standard/Protocol:	IEEE 802.3cc 25GBASE-LR, IEEE 802.3ae 10GBASE-LR
TX Wavelength:	1310nm
RX Wavelength:	1260-1360nm
Reach:	10km (SMF)
Interface Type:	10/25GBASE-LR
DDM:	Supported
Power Consumption:	1.2W max
Connector Type:	Duplex LC (UPC)
Operating Temperature:	0°C to +70°C (COM)

Overview

The FluxLight SFP-25G-MR-LR-FL is a dual-rate SFP28 transceiver for 10G and 25G Ethernet over single-mode fiber at distances up to 10 km. It operates at 25.78125 Gb/s (25GBASE-LR) or 10.3125 Gb/s (10GBASE-LR) at a nominal 1310 nm over duplex LC, so the same optic can serve a 10G link today and a 25G link after a host upgrade. Average launch power is −5 to +2 dBm and receiver sensitivity is −13 dBm.

The hot-pluggable module draws up to 1.2 W from a single +3.3V supply and provides real-time digital diagnostic monitoring of temperature, supply voltage, laser bias current and transmit/receive optical power over the two-wire serial (I2C) interface per SFF-8472. Every FluxLight optic is programmed and tested for 100% compatibility with the target OEM platform and is backed by a lifetime warranty.

Features

- Dual-rate 10G/25G operation: 10.3125 Gb/s (10GBASE-LR) and 25.78125 Gb/s (25GBASE-LR)
- SFP28 MSA compliant (SFF-8402/SFF-8431), hot-pluggable
- 1310 nm transmitter, 1260–1360 nm receiver
- Up to 10 km on 9/125 µm G.652 single-mode fiber
- Average launch power −5 to +2 dBm; receiver sensitivity −13 dBm
- Duplex LC (UPC) connector
- Digital Diagnostics Monitoring (DDM/DOM) per SFF-8472
- Single +3.3V power supply, 1.2 W max power dissipation
- Operating case temperature: 0°C to +70°C (COM)
- Class 1 laser product (IEC 60825-1)
- RoHS compliant
- 100% compatible with and programmed for the target OEM platform
- Backed by a FluxLight lifetime warranty

Applications

- 10G and 25G Ethernet over single-mode fiber up to 10 km
- Switch/router uplinks, campus and inter-building links
- Migration from 10G to 25G over the same single-mode cable plant

Absolute Maximum Rating

Parameter	Symbol	Min	Max	Unit
Storage Temperature	TS	-40	85	°C
Operating Case Temperature	TOP	0	70	°C
Power Supply Voltage	VCC	-0.3	3.6	V
Relative Humidity (non-condensation)	RH	5	85	%

Recommended Operating Conditions

Parameter	Symbol	Min	Typical	Max	Unit
Operating Case Temperature	TOP	0		70	°C
Power Supply Voltage	VCC	3.135	3.3	3.465	V
Power Consumption				1.2	W
Power Supply Current	Icc			350	mA
Link Distance with SMF (G.652)	D			10	km

Electrical and Optical Characteristics

Parameter	Symbol	Min	Typical	Max	Unit	Notes
Transmitter						
Support data rate			10.3125 25.78125		Gb/s	
Peak Wavelength	λp	1290	1310	1330	nm	
Spectral Width (-20dB)				1	nm	
Side Mode Suppression Ratio	SMSR	30			dB	
Average Optical Output Power	Po	-5		2	dBm	
Extinction Ratio	Er	3.5			dB	
Output Power with Transmitter Disabled	Poff			-30	dBm	
Transmitter Enable Voltage	VEN	-0.3		0.8	V	
Transmitter Disable Voltage	VD	2.0		Vcc+0.3	V	
Differential Data Input Swing	VINpp	180		700	mV	
Optical return loss tolerance				20	dB	
Receiver						
Support data rate			10.3125 25.78125		Gb/s	
Operate Wavelength		1260		1360	nm	
Receiver sensitivity	Sen			-13	dBm	1
Receive Power Overload	Psat	2.5			dBm	1
LOS Assert	LOSA	-30			dBm	
LOS De-Assert	LOSD			-17	dBm	
LOS Hysteresis	LOSH	0.5			dB	
Differential Data Output Swing	VOUTPP	450		1050	mV	
LOS Low Voltage	VLout			0.4	V	
LOS High Voltage	VHout	2.0			V	

1. Measured at 25.78125Gb/s, ER > 3.5dB, PRBS $2^{31}-1$, BER better than or equal to 5×10^{-5}.

Recommended Interface Circuit

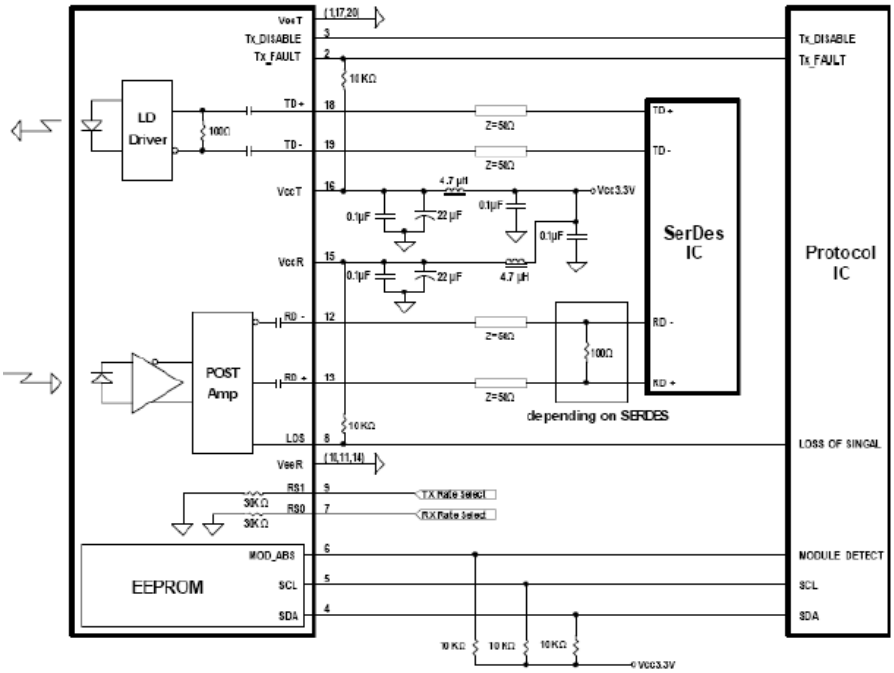

Digital Diagnostic Functions

The following digital diagnostic characteristics are defined over the normal operating conditions unless otherwise specified.

Parameter	Symbol	Min	Max	Unit
Temperature monitor absolute error	DMI_Temp	-5	5	°C
Supply voltage monitor absolute error	DMI_VCC	-0.1	0.1	V
RX power monitor absolute error	DMI_RX	-3	3	dB
Bias current monitor absolute error	DMI_Ibias	-10%	10%	mA
TX power monitor absolute error	DMI_TX	-3	3	dB

Mechanical Dimensions

Units: mm

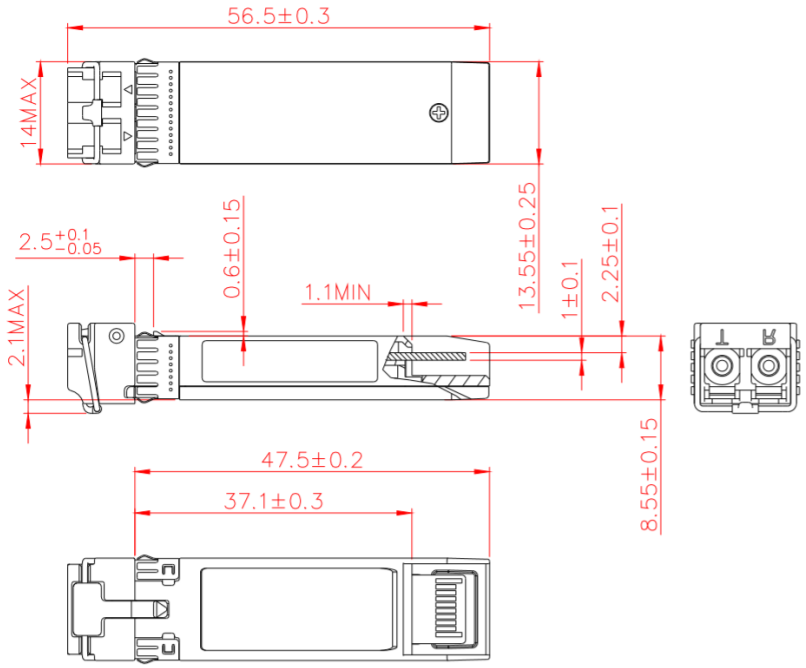

Pin Assignment and Description

20	VeeT	1	VeeT
19	TD-	2	Tx Fault
18	TD+	3	Tx Disable
17	VeeT	4	SDA
16	VccT	5	SCL
15	VccR	6	MOD-ABS
14	VeeR	7	RS0
13	RD+	8	LOS
12	RD-	9	RS1
11	VeeR	10	VeeR
Top of Board		**Bottom of Board** (as viewed thru top of board)	

Pin	Signal Name	Description	Plug Seq.	Notes
1	VeeT	Transmitter Ground	1	
2	TX FAULT	Transmitter Fault Indication	3	1
3	TX DISABLE	Transmitter Disable	3	2
4	SDA	SDA Serial Data Signal	3	
5	SCL	SCL Serial Clock Signal	3	
6	MOD_ABS	Module Absent. Grounded within the module	3	3
7	RS0	Not Connected	3	9
8	LOS	Loss of Signal	3	4
9	RS1	Not Connected	3	9
10	VeeR	Receiver Ground	1	5
11	VeeR	Receiver Ground	1	5
12	RD-	Inv. Received Data Out	3	6
13	RD+	Received Data Out	3	6
14	VeeR	Receiver Ground	1	5
15	VccR	Receiver Power Supply	2	7
16	VccT	Transmitter Power Supply	2	7
17	VeeT	Transmitter Ground	1	5
18	TD+	Transmit Data In	3	8
19	TD-	Inv. Transmit Data In	3	8
20	VeeT	Transmitter Ground	1	5

Plug Seq.: Pin engagement sequence during hot plugging.

1. TX Fault is an open-collector/drain output, which should be pulled up with a 4.7–10 kΩ resistor on the host board. Pull-up voltage between 2.0V and VccT + 0.3V. When high, the output indicates a laser fault of some kind. Low indicates normal operation. In the low state, the output will be pulled to < 0.4V.
2. TX Disable is an input that is used to shut down the transmitter optical output. It is pulled up within the module with a 4.7–10 kΩ resistor. Its states are: Low (–0.3 to 0.8V): Transmitter on · (> 0.8V, < 2.0V): Undefined · High (2.0V to VccT + 0.3V): Transmitter disabled · Open: Transmitter disabled.
3. MOD_ABS shall be pulled up with a 4.7–10 kΩ resistor on the host board. The pull-up voltage shall be VccT or VccR.
4. LOS (Loss of Signal) is an open-collector/drain output, which should be pulled up with a 4.7–10 kΩ resistor. Pull-up voltage between 2.0V and VccR + 0.3V. When high, this output indicates the received optical power is below the worst-case receiver sensitivity (as defined by the standard in use). Low indicates normal operation. In the low state, the output will be pulled to < 0.4V.
5. VeeR and VeeT may be internally connected within the SFP module.
6. RD-/+: These are the differential receiver outputs. They are AC-coupled 100Ω differential lines which should be terminated with 100Ω (differential) at the user SerDes. The AC coupling is done inside the module and is thus not required on the host board.
7. VccR and VccT are the receiver and transmitter power supplies. They are defined as 3.3V ±5% at the SFP connector pin. Inductors with DC resistance of less than 1Ω should be used in the host board power supply filter in order to maintain the required voltage at the SFP input pin with a 3.3V supply. When the recommended supply filtering network is used, hot plugging of the SFP transceiver module will result in an inrush current of no more than 30mA greater than the steady-state value. VccR and VccT may be internally connected within the SFP transceiver module.
8. TD-/+: These are the differential transmitter inputs. They are AC-coupled differential lines with 100Ω differential termination inside the module. The AC coupling is done inside the module and is thus not required on the host board.

9. Internally pulled down per SFF-8431 Rev 4.1.

ESD

This transceiver is specified as ESD threshold 1kV for high-speed data pins and 2kV for all other electrical input pins, tested per MIL-STD-883, Method 3015.4 /JESD22-A114-A (HBM). However, normal ESD precautions are still required during the handling of this module. This transceiver is shipped in ESD protective packaging. It should be removed from the packaging and handled only in an ESD protected environment.

Laser Safety

This is a Class 1 Laser Product according to IEC 60825-1:2007. This product complies with 21 CFR 1040.10 and 1040.11 except for deviations pursuant to Laser Notice No. 50, dated (June 24, 2007).