Datasheet

SFP-1GE-T-FL

1G, SFP, RJ45, CAT5, 100m, COM

Quick Spec

Rate Category:	1G
Supported Rate(s):	10M/100M/1G
Cable Type:	Copper (RJ-45)
Form Factor:	SFP
Reach:	100m
Interface Type:	10/100/1000BASE-T
DDM:	Not supported
Connector Type:	RJ45
Operating Temperature:	0°C to +70°C (COM)
Power Consumption:	1.2W max

Overview

The FluxLight SFP-1GE-T-FL is a hot-pluggable copper SFP transceiver for 10/100/1000 Mb/s Ethernet over Category 5 unshielded twisted-pair cable at distances up to 100 m. Compliant with IEEE 802.3-2002 and IEEE 802.3ab (1000BASE-T), it uses 5-level PAM signalling across all four cable pairs and supports automatic crossover detection, so no crossover cable is needed. 10/100/1000 operation requires a host with an SGMII interface; with a SerDes that does not support SGMII the module runs at 1000BASE-T only. Serial ID information is available over the two-wire interface per the SFP MSA. Each SFP-1GE-T-FL is programmed for 100% compatibility with the target OEM platform and is backed by a FluxLight lifetime warranty.

Features

- 10/100/1000 Mb/s full-duplex operation (1.25 Gb/s SFP interface)
- Hot-pluggable SFP footprint with RJ-45 connector
- Up to 100 m over Category 5 UTP cable
- 10/100/1000BASE-T operation in host systems with an SGMII interface; 1000BASE-T only with non-SGMII SerDes
- Automatic crossover detection (no crossover cable required)
- Compliant with SFP MSA, IEEE 802.3-2002 and IEEE 802.3ab (1000BASE-T)
- Single +3.3 V supply, 1.2 W max
- Operating case temperature: 0°C to +70°C (COM)
- RoHS compliant
- 100% compatible with and programmed for the target OEM platform
- Backed by a FluxLight lifetime warranty

Applications

- 10/100/1000BASE-T Ethernet over Category 5 (or better) UTP copper cable
- Connecting SFP switch ports to copper-cabled servers, appliances and legacy equipment
- Campus and enterprise access-layer links up to 100 m

Absolute Maximum Rating

The operation in excess of any absolute maximum ratings might cause permanent damage to this module.

Parameter	Symbol	Min	Max	Unit
Storage Temperature	TS	-40	85	°C
Operating Case Temperature	TOP	0	70	°C

Recommended Operating Conditions

Parameter	Symbol	Min	Typical	Max	Unit	Notes
Supply Current	Is		320	375	mA	1.2W max power over full range of voltage and temperature. See caution note below
Input Voltage	Vcc	3.13	3.3	3.47	V	Referenced to GND
Surge Current	Isurge		30		mA	Hot plug above steady state current. See caution note

Caution: Power consumption and surge current are higher than the specified values in the SFP MSA

General Specifications

Parameter	Symbol	Min	Typical	Max	Unit	Notes
Data Rate	BR	10		1,000	Mb/s	IEEE 802.3 compatible.
Cable Length	L			100	m	Category 5 UTP. BER <10^{-12}

Notes:

- Clock tolerance is ±50 ppm.
- Automatic crossover detection is enabled. External crossover cable is not required.
- 10/100/1000BASE-T operation requires the host system to have an SGMII interface with no clocks. With a SerDes that does not support SGMII, the module will operate at 1000BASE-T only.

High-Speed Electrical Signals

Parameter	Symbol	Min	Typical	Max	Unit	Notes
Line Frequency	fL		125		MHz	5-level encoding, per IEEE 802.3
Tx Output Impedance	Zout,TX		100		Ω	Differential
Rx Input Impedance	Zin,RX		100		Ω	Differential
Single ended data input swing	Vinsing	250		1200	mV	Single ended
Single ended data output swing	Voutsing	350		800	mV	Single ended
Rise/Fall Time	Tr,Tf		175		ps	20%-80%
Tx Input Impedance	Zin		50		Ω	Single ended
Rx Output Impedance	Zout		50		Ω	Single ended

Mechanical Dimensions

Units: mm

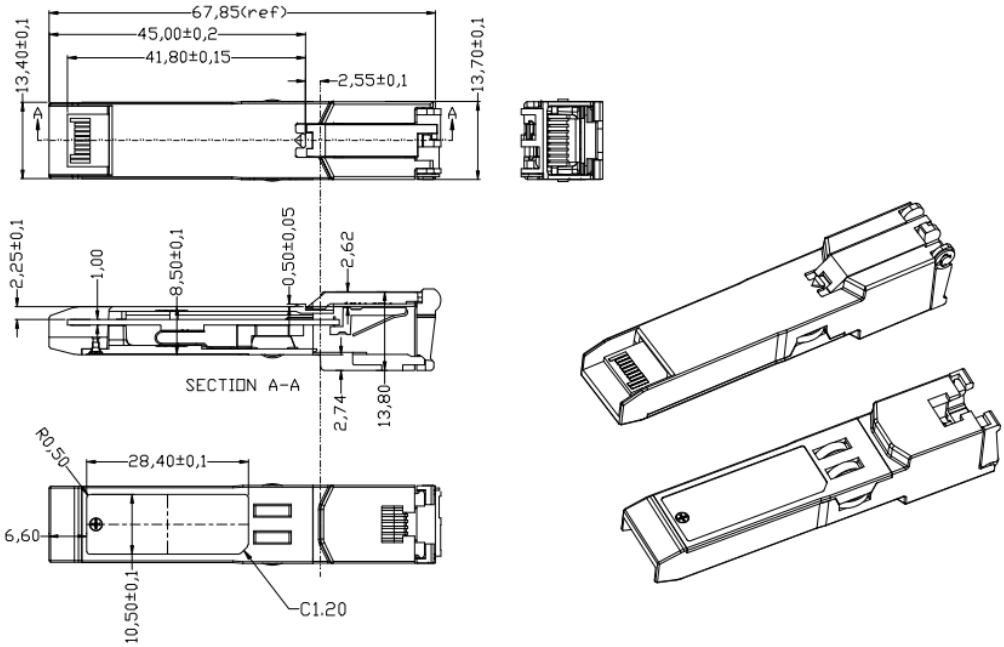

Pin Assignment and Description

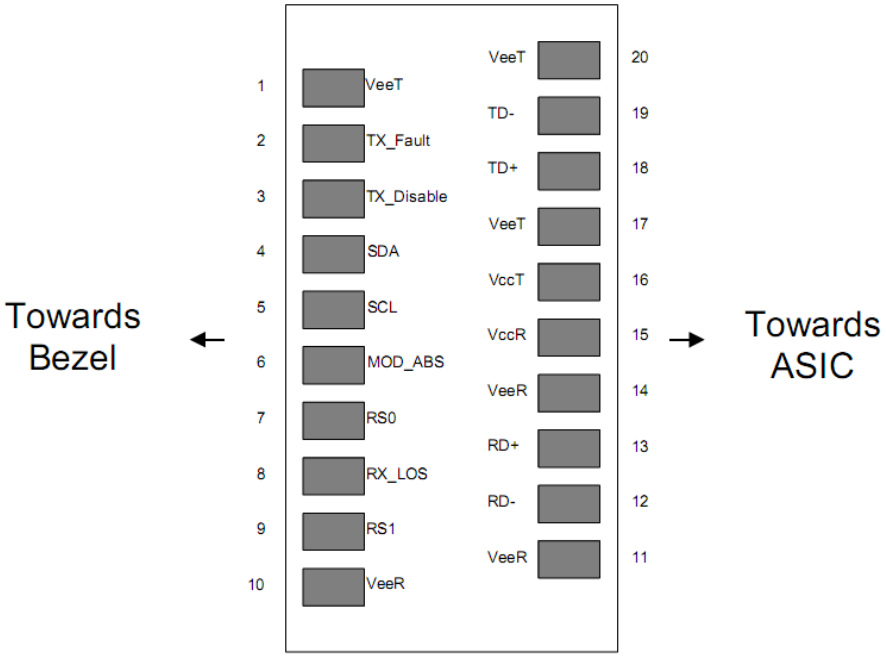

Pin	Signal Name	Description	Plug Seq.
1	VeeT	Transmitter Ground	1
2	TX FAULT	Transmitter Fault Indication	3
3	TX DISABLE	Transmitter Disable	3
4	SDA	SDA Serial Data Signal	3
5	SCL	SCL Serial Clock Signal	3
6	MOD_ABS	Module Absent. Grounded within the module	3
7	RS0	Not Connected	3
8	LOS	Loss of Signal	3
9	RS1	Not Connected	3
10	VeeR	Receiver ground	1
11	VeeR	Receiver ground	1
12	RD-	Inv. Received Data Out	3
13	RD+	Received Data Out	3
14	VeeR	Receiver ground	1
15	VCCR	Receiver Power Supply	2
16	VCCT	Transmitter Power Supply	2
17	VeeT	Transmitter Ground	1
18	TD+	Transmit Data In	3
19	TD-	Inv. Transmit Data In	3
20	VeeT	Transmitter Ground	1

Notes:

- TX Fault is not used and is always tied to ground through a 100 Ω resistor.
- TX Disable as described in the MSA is applicable to the 1000BASE-T module.
- Mod-Def 0, 1, 2 are the module definition pins. They should be pulled up with a 4.7–10 kΩ resistor on the host board to a supply less than VccT + 0.3 V or VccR + 0.3 V.
- Mod-Def 0 is tied to ground through a resistor to indicate that the module is present.
- Mod-Def 1 is the clock line of the two-wire serial interface for optional serial ID.
- Mod-Def 2 is the data line of the two-wire serial interface for optional serial ID.
- RD-/+: These are the differential receiver outputs. They are AC-coupled 100 Ω differential lines which should be terminated with 100 Ω differential at the user SerDes. The AC coupling is done inside the module and is thus not required on the host board.
- VccR and VccT are the receiver and transmitter power supplies.
- TD-/+: These are the differential transmitter inputs. They are AC-coupled differential lines with 100 Ω differential termination inside the module. The AC coupling is done inside the module and is thus not required on the host board.

ESD

Normal ESD precautions are required during the handling of this module. This transceiver is shipped in ESD protective packaging. It should be removed from the packaging and handled only in an ESD protected environment.