FluxLight
OPTICAL TRANSCEIVERS

Datasheet

SFP-10G-ZR-S-FL

10G, SFP+, Duplex LC, 1550nm, SMF, 80km, COM

Quick Spec

Rate Category:	10G
Form Factor:	SFP+
Interface Type:	10GBASE-ZR
Standard/Protocol:	10GBASE-ZR/ZW (industry standard, 80 km); SONET OC-192 / SDH STM-64
TX Wavelength:	1550nm
RX Wavelength:	1260-1600nm
Cable Type:	SMF (G.652)
Reach:	80km (SMF)
DDM:	Supported
Connector Type:	Duplex LC (UPC)
Power Consumption:	< 1.5 W
Operating Temperature:	0°C to +70°C (COM)



Overview

The FluxLight SFP-10G-ZR-S-FL is a high-performance 10G optical transceiver module designed for 10 Gigabit Ethernet and OC-192/STM-64 links up to 80 km over single-mode fiber. Internally, the module integrates a 1550 nm cooled EML laser transmitter, an APD photodiode receiver paired with a trans-impedance amplifier (TIA), and an MCU control unit. Because its maximum launch power exceeds the receiver saturation level, short links need an in-line optical attenuator. Fully compliant with the SFP+ Multi-Source Agreement (MSA), SFF-8472 digital diagnostic monitoring (DDM/DOM), and Class 1 laser safety standards, it delivers reliable extended-reach connectivity up to 80 km over G.652 single-mode fiber.

Features

- Hot-pluggable SFP+ footprint with duplex LC receptacle
- Supports up to 11.3 Gbps: 10GBASE-ZR/ZW, OC-192/ STM-64, OTU2
- 1550 nm cooled EML laser transmitter and APD photodiode receiver
- Up to 80 km over G.652 single-mode fiber
- Average launch power 0 to +4.0 dBm; receiver sensitivity better than −23 dBm
- Real-time Digital Diagnostic Monitoring (DDM/DOM) via 2-wire serial interface per SFF-8472
- Metal enclosure for lower EMI
- Single +3.3V power supply, power dissipation < 1.5 W
- Operating case temperature: 0°C to +70°C (COM)
- SFP+ MSA (SFF-8431, SFF-8432) compliant, RoHS compliant, and Class 1 laser eye safety certified (IEC/EN 60825-1)
- 100% compatible with and programmed for the target OEM platform
- Backed by a FluxLight lifetime warranty

Applications

- 10 Gigabit Ethernet over single-mode fiber up to 80 km (10GBASE-ZR/ZW)
- 10G SONET/SDH (OC-192 / STM-64) and OTN (OTU2)
- 10G and 8G Fibre Channel (10GFC / 8GFC)
- CPRI/OBSAI wireless fronthaul (9.830 / 10.137 Gb/s)
- Metro, regional and data center interconnect links

Absolute Maximum Rating

The operation in excess of any absolute maximum ratings might cause permanent damage to this module.

Parameter	Symbol	Min	Max	Unit
Storage Temperature	TS	-40	85	°C
Operating Case Temperature	TOP	0	70	°C
Power Supply Voltage	VCC	-0.3	3.6	V
Relative Humidity (non-condensation)	RH	5	85	%

Recommended Operating Conditions

Parameter	Symbol	Min	Typical	Max	Unit
Operating Case Temperature	TOP	0		70	°C
Power Supply Voltage	VCC	3.135	3.3	3.465	V
Power Supply Current @ 3.3V	Icc			430	mA
Power Consumption				1.5	W
Data Rate	DR		10.3125	11.3	Gbps
Link Distance with SMF	D			80	km

Electrical and Optical Characteristics

Parameter	Symbol	Min	Typical	Max	Unit	Notes
Transmitter						
Support data rate			10.3125	11.3	Gb/s	
Center Wavelength		1530		1550	nm	
Spectral Width (-20dB)				1	nm	
Side Mode Suppression Ratio	SMSR	30			dB	
Average Optical Output Power	Po	0		4.0	dBm	
Extinction Ratio	Er	8.2			dB	
Transmitter and dispersion penalty	TDP			3.0	dB	1
Dispersion Tolerance				1600	ps/nm	
Output Power with Transmitter Disabled	Poff			-30	dBm	
Transmitter Enable Voltage	VEN	0		0.8	V	
Transmitter Disable Voltage	VD	2.0		Vcc	V	
Differential Data Input Swing	VINpp	120		850	mV	
RIN12OMA	RIN12			-128	dB/Hz	
Optical Return Loss Tolerance	ORLT	21			dB	
Output Eye Diagram	Compliant with IEEE 802.3					2
Receiver						
Support data rate			10.3125	11.3	Gb/s	
Operate Wavelength		1260		1600	nm	
Receiver sensitivity (BER of 1E-12) @10.3125Gb/s	Sen1			-23	dBm	3
Saturation (BER of 1E-12)	Psat	-7.0			dBm	3
Receiver Reflectance	RRx			-24	dB	
LOS Assert	LOSA	-37			dBm	
LOS De-Assert	LOSD			-24	dBm	
LOS Hysteresis	LOSH	0.5		5.0	dB	
Differential Data Output Swing	VOUTPP	300		850	mV	
LOS Low Voltage	VLout			0.8	V	
LOS High Voltage	VHout	2.0			V	

1. For 1600 ps/nm dispersion at 10.3 Gb/s.
2. At least 1000 waveforms acquired, with minimum 5% margin against the IEEE 802.3 mask.
3. Tested at 10.3125Gb/s, PRBS $2^{31}-1$, BER of 1×10^{-12}, NRZ, including back-to-back.

Recommended Interface Circuit

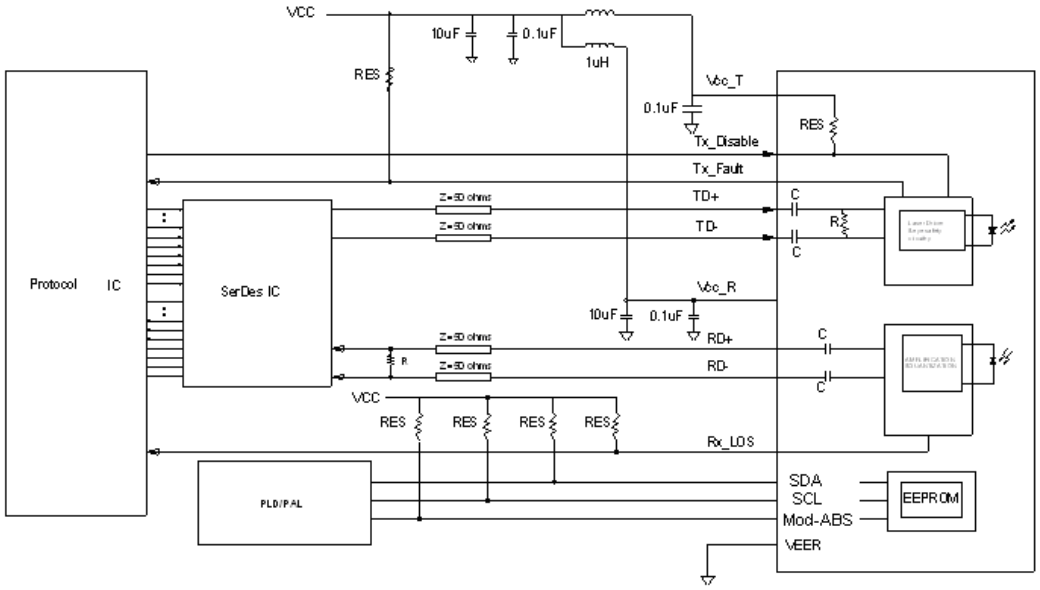

NOTE: 4.7K ohms<RES<10K ohms

Digital Diagnostic Functions

The following digital diagnostic characteristics are defined over the normal operating conditions unless otherwise specified.

Parameter	Symbol	Min	Max	Unit
Temperature monitor absolute error	DMI_Temp	-3	3	°C
Supply voltage monitor absolute error	DMI_VCC	-0.1	0.1	V
Channel RX power monitor absolute error	DMI_RX_Ch	-3	3	dB
Channel Bias current monitor	DMI_Ibias_Ch	-10%	10%	mA
Channel TX power monitor absolute error	DMI_TX_Ch	-3	3	dB

Mechanical Dimensions

Units: mm

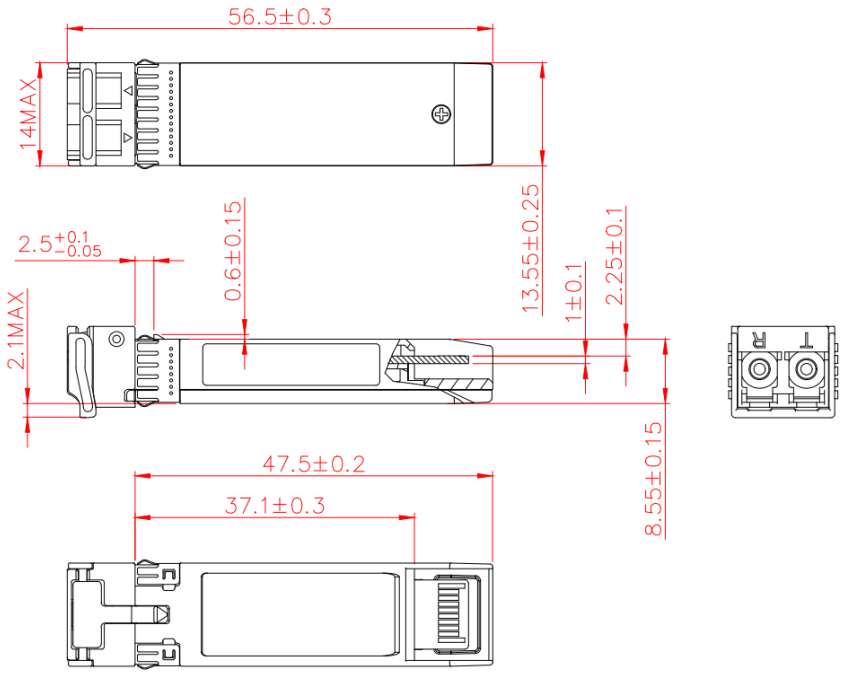

Pin Assignment and Description

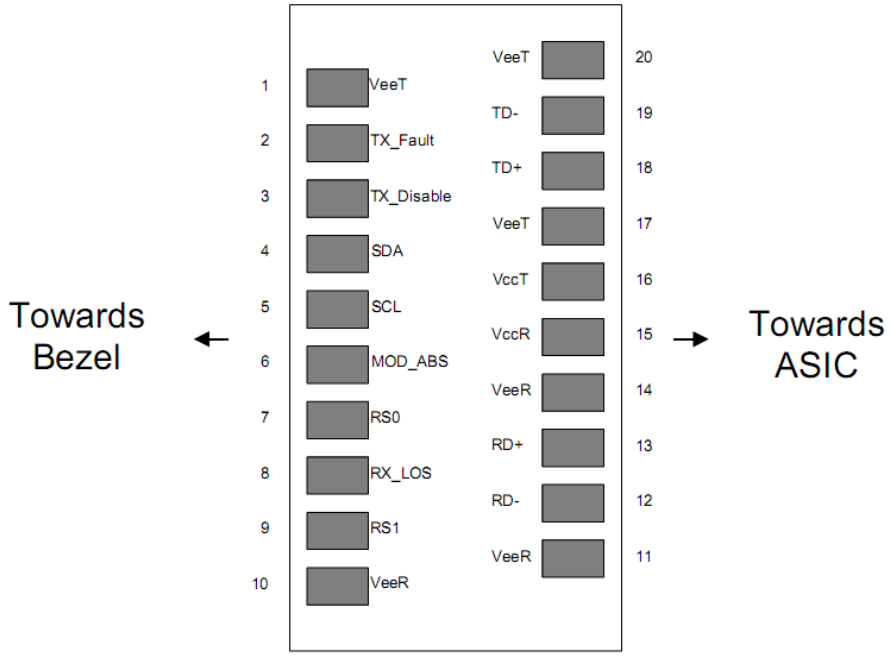

Pin	Signal Name	Description	Plug Seq.	Notes
1	VeeT	Transmitter Ground	1	
2	TX FAULT	Transmitter Fault Indication	3	1
3	TX DISABLE	Transmitter Disable	3	2
4	SDA	SDA Serial Data Signal	3	
5	SCL	SCL Serial Clock Signal	3	
6	MOD_ABS	Module Absent. Grounded within the module	3	
7	RS0	Not Connected	3	
8	LOS	Loss of Signal	3	3
9	RS1	Not Connected	3	
10	VeeR	Receiver ground	1	
11	VeeR	Receiver ground	1	
12	RD-	Inv. Received Data Out	3	4
13	RD+	Received Data Out	3	4
14	VeeR	Receiver ground	1	
15	VCCR	Receiver Power Supply	2	
16	VCCT	Transmitter Power Supply	2	
17	VeeT	Transmitter Ground	1	
18	TD+	Transmit Data In	3	5
19	TD-	Inv. Transmit Data In	3	5
20	VeeT	Transmitter Ground	1	

Plug Seq.: pin engagement sequence during hot plugging.

1. TX Fault is an open-collector output, which should be pulled up with a 4.7–10 kΩ resistor on the host board to a voltage between 2.0V and Vcc + 0.3V. Logic 0 indicates normal operation; logic 1 indicates a laser fault of some kind. In the low state, the output is pulled to less than 0.8V.
2. Laser output disabled on TDIS > 2.0V or open, enabled on TDIS < 0.8V.
3. LOS is an open-collector output. Should be pulled up with 4.7–10 kΩ on the host board to a voltage between 2.0V and 3.6V. Logic 0 indicates normal operation; logic 1 indicates loss of signal.
4. RD−/+: differential receiver outputs. They are internally AC-coupled 100 Ω differential lines, which should be terminated with 100 Ω (differential) at the user SERDES.
5. TD−/+: differential transmitter inputs. They are internally AC-coupled differential lines with 100 Ω differential termination inside the module.

ESD

This transceiver is specified as ESD threshold 1kV for high-speed data pins and 2kV for all other electrical input pins, tested per MIL-STD-883, Method 3015.4 /JESD22-A114-A (HBM). However, normal ESD precautions are still required during the handling of this module. This transceiver is shipped in ESD protective packaging. It should be removed from the packaging and handled only in an ESD protected environment.

Laser Safety

This is a Class 1 Laser Product according to IEC 60825-1:2007. This product complies with 21 CFR 1040.10 and 1040.11 except for deviations pursuant to Laser Notice No. 50, dated (June 24, 2007).