Datasheet

# SFP-10G-SR-S-FL

10G, SFP+, Duplex LC, 850nm, MMF, COM

## Quick Spec

| | |
|---|---|
| **Rate Category:** | 10G |
| **Form Factor:** | SFP+ |
| **Interface Type:** | 10GBASE-SR |
| **Standard/Protocol:** | IEEE 802.3ae 10GBASE-SR |
| **TX Wavelength:** | 850nm |
| **RX Wavelength:** | 850nm |
| **Cable Type:** | MMF |
| **Reach:** | 300m(OM3), 400m(OM4) |
| **DDM:** | Supported |
| **Connector Type:** | Duplex LC (UPC) |
| **Power Consumption:** | < 1.0 W |
| **Operating Temperature:** | 0°C to +70°C (COM) |

## Overview

The FluxLight SFP-10G-SR-S-FL is a high-performance, cost-effective 10G optical transceiver module designed for 10 Gigabit Ethernet links over multimode fiber. Internally, the module integrates an 850 nm VCSEL transmitter, a PIN photodiode paired with a trans-impedance amplifier (TIA), and an MCU control unit. Fully compliant with the SFP+ Multi-Source Agreement (MSA), SFF-8472 digital diagnostic monitoring (DDM/DOM), and Class 1 laser safety standards, it delivers reliable, low-power optical connectivity up to 300 meters on OM3 MMF and 400 meters on OM4 MMF.

## Features

- Hot-pluggable SFP+ footprint with duplex LC receptacle
- Supports 9.95 to 10.52 Gbps line rates; compliant with IEEE 802.3ae 10GBASE-SR and 10G Fibre Channel
- 850 nm VCSEL laser transmitter and PIN photodiode receiver
- Up to 400m on OM4 MMF, 300m on OM3 MMF, 82m on OM2 MMF, 33m on OM1 MMF
- Optical launch power of −7.3 to −1.0 dBm; receiver sensitivity < −11.1 dBm
- Real-time Digital Diagnostic Monitoring (DDM/DOM) via 2-wire serial interface per SFF-8472
- Single +3.3V power supply with ultra-low power dissipation (< 1.0W)
- Operating case temperature: 0°C to +70°C (COM)
- SFP+ MSA (SFF-8431) compliant, RoHS-6 compliant, and Class 1 laser eye safety certified (IEC/EN 60825-1)
- 100% compatible with and programmed for the target OEM platform
- Backed by a FluxLight lifetime warranty

## Applications

- 10 Gigabit Ethernet over multimode fiber
- Data center short-reach interconnect (server-to-switch, ToR/EoR, switch-to-switch uplinks)
- 10G Fibre Channel / Storage Area Network (SAN)

## Absolute Maximum Rating

The operation in excess of any absolute maximum ratings might cause permanent damage to this module.

| Parameter | Symbol | Min | Max | Unit |
|---|---|---|---|---|
| Storage Temperature | TS | -40 | 85 | °C |
| Operating Case Temperature | TOP | 0 | 70 | °C |
| Power Supply Voltage | VCC | -0.3 | 3.6 | V |
| Relative Humidity (non-condensation) | RH | 5 | 85 | % |

## Recommended Operating Conditions

| Parameter | Symbol | Min | Typical | Max | Unit |
|---|---|---|---|---|---|
| Operating Case Temperature | TOP | 0 | | 70 | °C |
| Power Supply Voltage | VCC | 3.135 | 3.3 | 3.465 | V |
| Power Consumption | | | | 1 | W |
| Data Rate | DR | | 10.3125 | | Gbps |
| Link Distance with OM3 | D | | | 300 | m |
| Link Distance with OM4 | D | | | 400 | m |

## Electrical and Optical Characteristics

| Parameter | Symbol | Min | Typical | Max | Unit | Notes |
|---|---|---|---|---|---|---|
| **Transmitter** | | | | | | |
| Center Wavelength | λc | 840 | 850 | 860 | nm | |
| Spectral Width (RMS) | Δλ | | | 0.45 | nm | |
| Average Output Power | Pout | -7.3 | | -1 | dBm | 1 |
| Extinction Ratio | ER | 3.5 | | | dB | |
| Data Input Swing Differential | VIN | 180 | | 700 | mV | 2 |
| **Receiver** | | | | | | |
| Center Wavelength | λc | 840 | 850 | 860 | nm | |
| Receiver Sensitivity | Sen | | | -11.1 | dBm | 3 |
| Receiver Overload | Psat | 0.5 | | | dBm | 3 |
| LOS Assert | LOSA | | | -30 | dBm | |
| LOS De-Assert | LOSD | | | -12 | dBm | |
| LOS Hysteresis | LOSH | 0.5 | | 5 | dB | |
| Data Output Swing Differential | Vout | 500 | 700 | 900 | mV | |
| LOS High Voltage | VHout | 2.0 | | Vcc | V | |
| LOS Low Voltage | VLout | | | 0.8 | V | |

**Notes:**

1. The optical power is launched into MMF.
2. CML input, internally AC-coupled and terminated.
3. Measured with a PRBS $2^{31}-1$ test pattern @10312Mbps, BER $\leq 1\times10^{-12}$.

## Recommended Interface Circuit

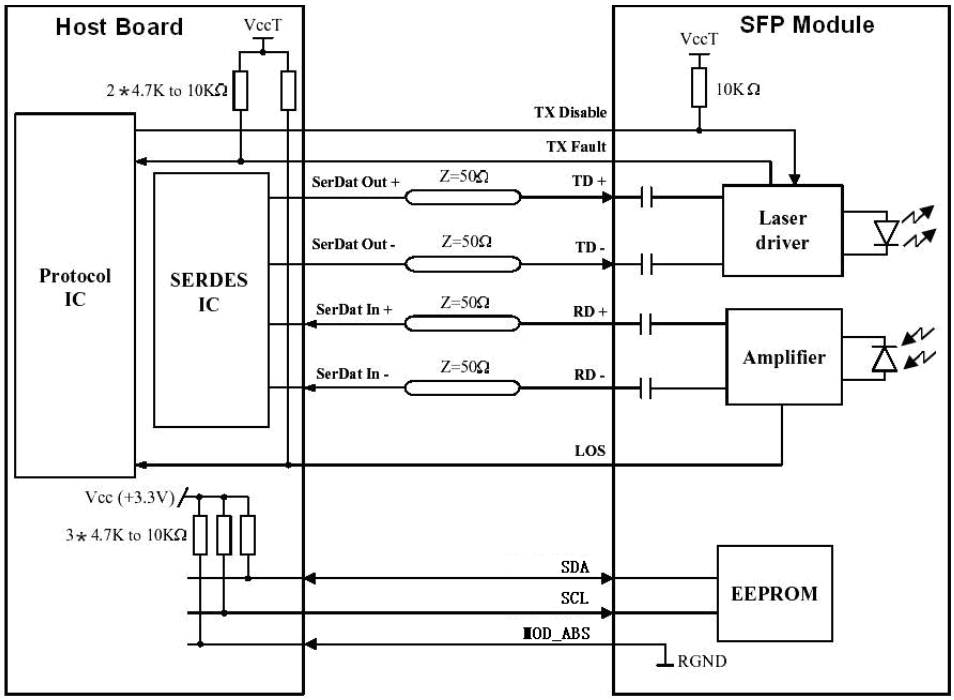


## Digital Diagnostic Functions

The following digital diagnostic characteristics are defined over the normal operating conditions unless otherwise specified.

| Parameter | Symbol | Min | Max | Unit |
|---|---|---|---|---|
| Temperature monitor absolute error | DMI_Temp | -5 | 5 | °C |
| Supply voltage monitor absolute error | DMI_VCC | -0.1 | 0.1 | V |
| Channel RX power monitor absolute error | DMI_RX_Ch | -3 | 3 | dB |
| Channel Bias current monitor | DMI_Ibias_Ch | -10% | 10% | mA |
| Channel TX power monitor absolute error | DMI_TX_Ch | -3 | 3 | dB |

## Mechanical Dimensions

Units: mm

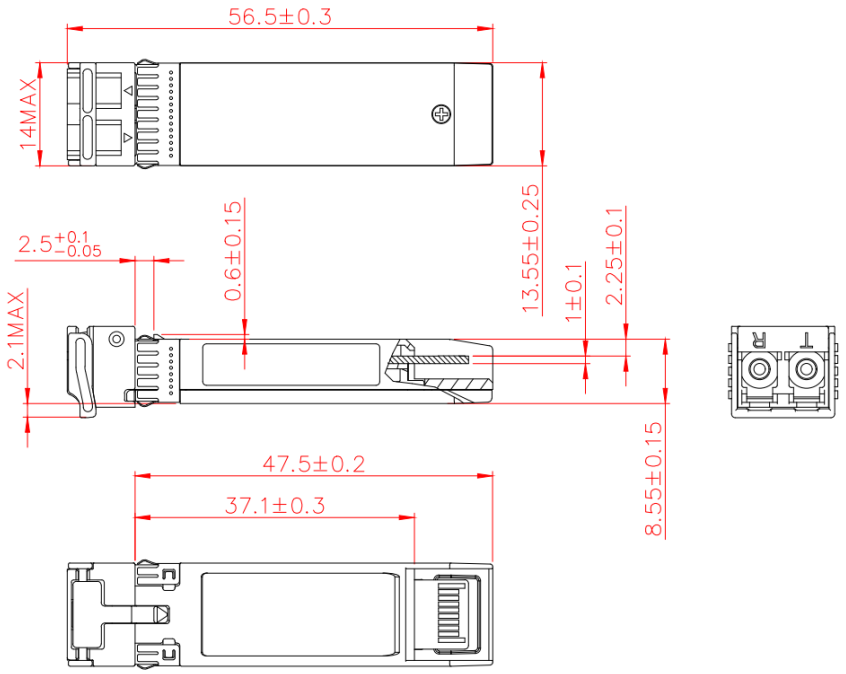


## Pin Assignment and Description

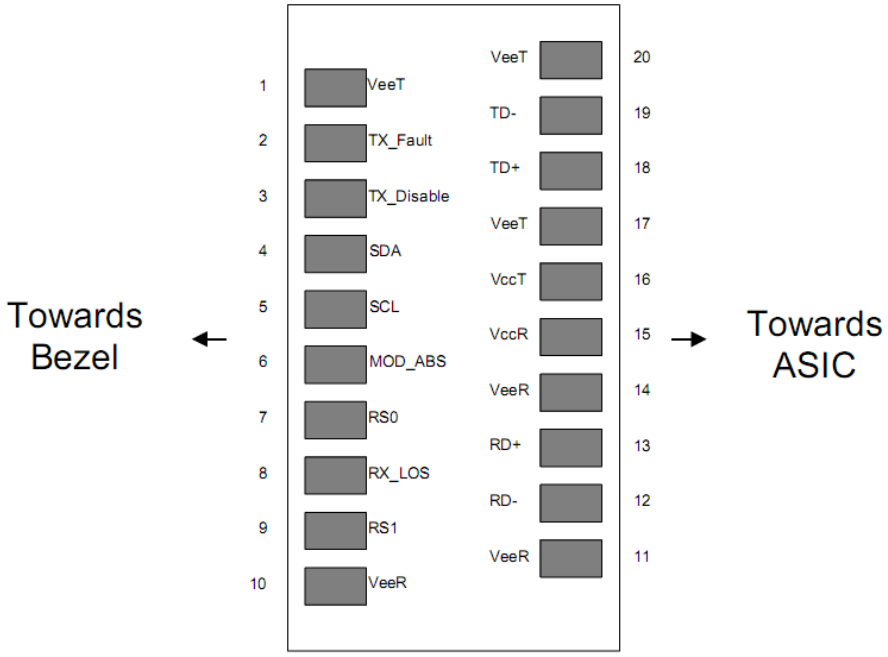

| Pin | Signal Name | Description | Plug Seq. |
|---|---|---|---|
| 1 | VeeT | Transmitter Ground | 1 |
| 2 | TX FAULT | Transmitter Fault Indication | 3 |
| 3 | TX DISABLE | Transmitter Disable | 3 |
| 4 | SDA | SDA Serial Data Signal | 3 |
| 5 | SCL | SCL Serial Clock Signal | 3 |
| 6 | MOD_ABS | Module Absent. Grounded within the module | 3 |
| 7 | RS0 | Not Connected | 3 |
| 8 | LOS | Loss of Signal | 3 |
| 9 | RS1 | Not Connected | 3 |
| 10 | VeeR | Receiver ground | 1 |
| 11 | VeeR | Receiver ground | 1 |
| 12 | RD- | Inv. Received Data Out | 3 |
| 13 | RD+ | Received Data Out | 3 |
| 14 | VeeR | Receiver ground | 1 |
| 15 | VCCR | Receiver Power Supply | 2 |
| 16 | VCCT | Transmitter Power Supply | 2 |
| 17 | VeeT | Transmitter Ground | 1 |
| 18 | TD+ | Transmit Data In | 3 |
| 19 | TD- | Inv. Transmit Data In | 3 |
| 20 | VeeT | Transmitter Ground | 1 |

## ESD

This transceiver is specified as ESD threshold 1kV for high-speed data pins and 2kV for all other electrical input pins, tested per MIL-STD-883, Method 3015.4 /JESD22-A114-A (HBM). However, normal ESD precautions are still required during the handling of this module. This transceiver is shipped in ESD protective packaging. It should be removed from the packaging and handled only in an ESD protected environment.

## Laser Safety

This is a Class 1 Laser Product according to IEC 60825-1:2007. This product complies with 21 CFR 1040.10 and 1040.11 except for deviations pursuant to Laser Notice No. 50, dated (June 24, 2007).