Datasheet

SFP-10G-SR-A-FL

10G, SFP+, Duplex LC, 850nm, MMF, COM

Quick Spec

Rate Category:	10G
Form Factor:	SFP+
Interface Type:	10GBASE-SR
Standard/Protocol:	IEEE 802.3ae 10GBASE-SR
TX Wavelength:	850nm
RX Wavelength:	850nm
Cable Type:	MMF
Reach:	300m(OM3), 400m(OM4)
DDM:	Supported
Connector Type:	Duplex LC (UPC)
Power Consumption:	< 1.0 W
Operating Temperature:	0°C to +70°C (COM)

Overview

The FluxLight SFP-10G-SR-A-FL is a high-performance, cost-effective 10G optical transceiver module designed for 10 Gigabit Ethernet links over multimode fiber. Internally, the module integrates an 850 nm VCSEL transmitter, a PIN photodiode paired with a trans-impedance amplifier (TIA), and an MCU control unit. Fully compliant with the SFP+ Multi-Source Agreement (MSA), SFF-8472 digital diagnostic monitoring (DDM/DOM), and Class 1 laser safety standards, it delivers reliable, low-power optical connectivity up to 300 meters on OM3 MMF and 400 meters on OM4 MMF.

Features

- Hot-pluggable SFP+ footprint with duplex LC receptacle
- Supports 9.95 to 10.52 Gbps line rates; compliant with IEEE 802.3ae 10GBASE-SR and 10G Fibre Channel
- 850 nm VCSEL laser transmitter and PIN photodiode receiver
- Up to 400m on OM4 MMF, 300m on OM3 MMF, 82m on OM2 MMF, 33m on OM1 MMF
- Optical launch power of −7.3 to −1.0 dBm; receiver sensitivity < −11.1 dBm
- Real-time Digital Diagnostic Monitoring (DDM/DOM) via 2-wire serial interface per SFF-8472
- Single +3.3V power supply with ultra-low power dissipation (< 1.0W)
- Operating case temperature: 0°C to +70°C (COM)
- SFP+ MSA (SFF-8431) compliant, RoHS-6 compliant, and Class 1 laser eye safety certified (IEC/EN 60825-1)
- 100% compatible with and programmed for the target OEM platform
- Backed by a FluxLight lifetime warranty

Applications

- 10 Gigabit Ethernet over multimode fiber
- Data center short-reach interconnect (server-to-switch, ToR/EoR, switch-to-switch uplinks)
- 10G Fibre Channel / Storage Area Network (SAN)

Absolute Maximum Rating

The operation in excess of any absolute maximum ratings might cause permanent damage to this module.

Parameter	Symbol	Min	Max	Unit
Storage Temperature	TS	-40	85	°C
Operating Case Temperature	TOP	0	70	°C
Power Supply Voltage	VCC	-0.3	3.6	V
Relative Humidity (non-condensation)	RH	5	85	%

Recommended Operating Conditions

Parameter	Symbol	Min	Typical	Max	Unit
Operating Case Temperature	TOP	0		70	°C
Power Supply Voltage	VCC	3.135	3.3	3.465	V
Power Consumption				1	W
Data Rate	DR		10.3125		Gbps
Link Distance with OM3	D			300	m
Link Distance with OM4	D			400	m

Electrical and Optical Characteristics

Parameter	Symbol	Min	Typical	Max	Unit	Notes
Transmitter						
Center Wavelength	λc	840	850	860	nm	
Spectral Width (RMS)	Δλ			0.45	nm	
Average Output Power	Pout	-7.3		-1	dBm	1
Extinction Ratio	ER	3.5			dB	
Data Input Swing Differential	VIN	180		700	mV	2
Receiver						
Center Wavelength	λc	840	850	860	nm	
Receiver Sensitivity	Sen			-11.1	dBm	3
Receiver Overload	Psat	0.5			dBm	3
LOS Assert	LOSA			-30	dBm	
LOS De-Assert	LOSD			-12	dBm	
LOS Hysteresis	LOSH	0.5		5	dB	
Data Output Swing Differential	Vout	500	700	900	mV	
LOS High Voltage	VHout	2.0		Vcc	V	
LOS Low Voltage	VLout			0.8	V	

Notes:

1. The optical power is launched into MMF.
2. CML input, internally AC-coupled and terminated.
3. Measured with a PRBS $2^{31}-1$ test pattern @10312Mbps, BER $\leq 1\times10^{-12}$.

Recommended Interface Circuit

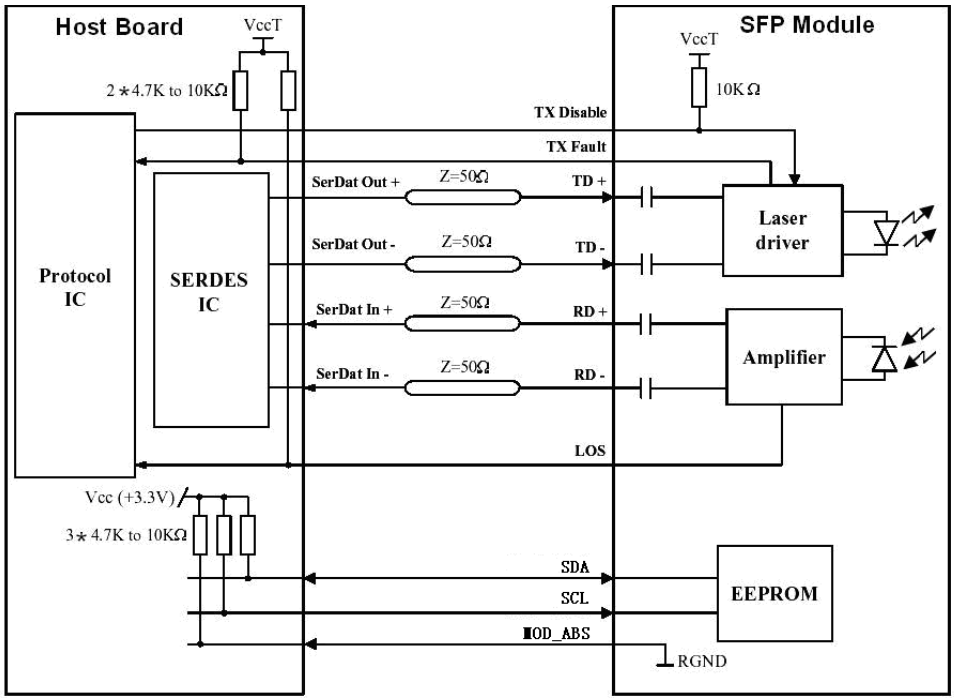

Digital Diagnostic Functions

The following digital diagnostic characteristics are defined over the normal operating conditions unless otherwise specified.

Parameter	Symbol	Min	Max	Unit
Temperature monitor absolute error	DMI_Temp	-5	5	°C
Supply voltage monitor absolute error	DMI_VCC	-0.1	0.1	V
Channel RX power monitor absolute error	DMI_RX_Ch	-3	3	dB
Channel Bias current monitor	DMI_Ibias_Ch	-10%	10%	mA
Channel TX power monitor absolute error	DMI_TX_Ch	-3	3	dB

Mechanical Dimensions

Units: mm

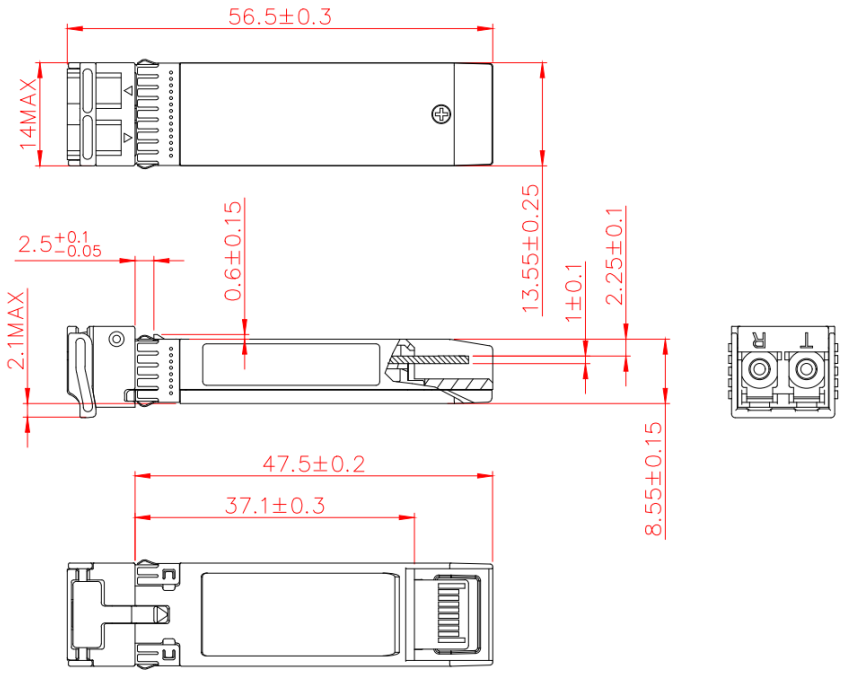

Pin Assignment and Description

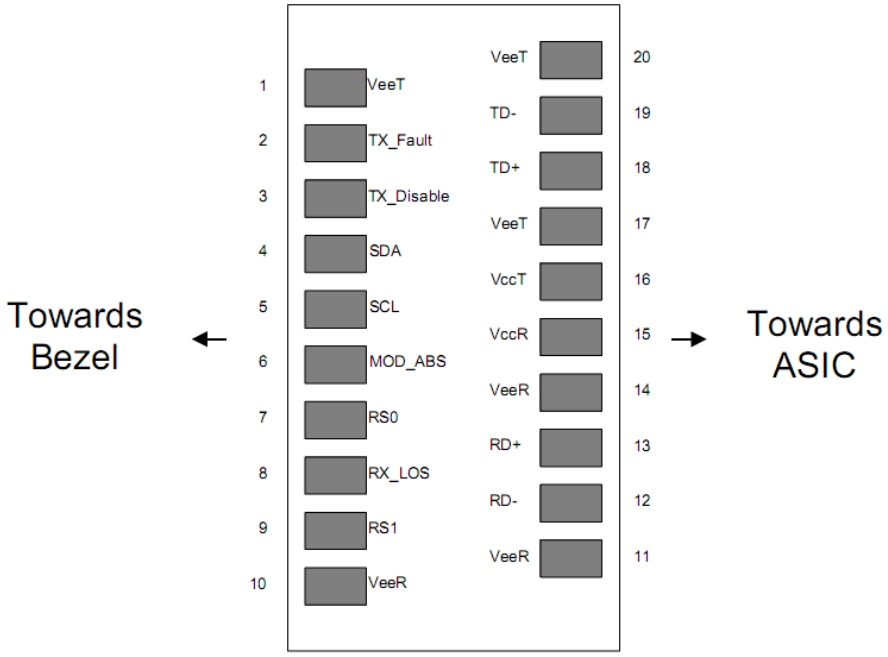

Pin	Signal Name	Description	Plug Seq.
1	VeeT	Transmitter Ground	1
2	TX FAULT	Transmitter Fault Indication	3
3	TX DISABLE	Transmitter Disable	3
4	SDA	SDA Serial Data Signal	3
5	SCL	SCL Serial Clock Signal	3
6	MOD_ABS	Module Absent. Grounded within the module	3
7	RS0	Not Connected	3
8	LOS	Loss of Signal	3
9	RS1	Not Connected	3
10	VeeR	Receiver ground	1
11	VeeR	Receiver ground	1
12	RD-	Inv. Received Data Out	3
13	RD+	Received Data Out	3
14	VeeR	Receiver ground	1
15	VCCR	Receiver Power Supply	2
16	VCCT	Transmitter Power Supply	2
17	VeeT	Transmitter Ground	1
18	TD+	Transmit Data In	3
19	TD-	Inv. Transmit Data In	3
20	VeeT	Transmitter Ground	1

ESD

This transceiver is specified as ESD threshold 1kV for high-speed data pins and 2kV for all other electrical input pins, tested per MIL-STD-883, Method 3015.4 /JESD22-A114-A (HBM). However, normal ESD precautions are still required during the handling of this module. This transceiver is shipped in ESD protective packaging. It should be removed from the packaging and handled only in an ESD protected environment.

Laser Safety

This is a Class 1 Laser Product according to IEC 60825-1:2007. This product complies with 21 CFR 1040.10 and 1040.11 except for deviations pursuant to Laser Notice No. 50, dated (June 24, 2007).